10 Industrial Ave,
Suite 3
Mahwah NJ 07430

Phone: 201.684.0055
Fax: 201.684.0066

June 4, 2019

Members of the Siting Council
Connecticut Siting Council
Ten Franklin Square
New Britain, CT 06051

RE: Notice of Exempt Modification
6 Stone Ranch Road, East Lyme, CT 06333
Latitude: 41.365966000000
Longitude: -72.266151000000
T-Mobile Site#: CT11330A – L600

Dear Ms. Bachman:

T-Mobile currently maintains three (3) antennas at the 112-foot level of the existing 140-foot lattice tower at 6 Stone Ranch Road, East Lyme, CT. The 140-foot lattice tower and property are owned by the State of Connecticut State Police. T-Mobile now intends to replace the three (3) existing antennas with three (3) new 600/700/1900/2100 MHz antennas. The new antennas will be installed at the same 112-foot level of the tower. The modification includes a mount replacement to accommodate the proposed equipment, as detailed on the enclosed mount analysis.

Planned Modifications:

Tower:

Remove
(6) TMAs
(6) 1-1/4" coax

Remove and Replace:
(3) EMS RR90-17-00DP (REMOVE) - (3) RFS APXVAARR24_43 Antenna 600/700/1900/2100 (REPLACE)
(3) Mount frame Existing (REMOVE) – (3) Commscope SF-QV12-B QV Sector Frame (REPLACE)

Install New:
(3) Radio 4449 B71+B12 RRHs
(3) Radio 4415 B25 RRHs
(3) Radio 4415 B66a RRHs
(3) 1-3/8" Hybrid Cables

Existing to Remain: N/A

Ground:

Install New: Equipment inside existing 6102 cabinet

This facility was approved by the CSC in Docket No. 160 dated September 29, 1993. This modification complies with this original approval

Please accept this letter as notification pursuant to Regulations of Connecticut State Agencies§ 16- SOj-73, for construction that constitutes an exempt modification pursuant to R.C.S.A. § 16-50j-72(b)(2). In accordance with R.C.SA. § 16-SOj-73, a copy of this letter is being sent to First Selectman -Mark Nickerson, Elected Official, and Gary Goeschel II, Director of Planning for the Town of East Lyme.

The planned modifications to the facility fall squarely within those activities explicitly provided for in R.C.S;A. § 16-50j-72(b)(2).

1. The proposed modifications will not result in an increase in the height of the existing structure.

2. The proposed modifications will not require the extension of the site boundary.

3. The proposed modifications will not increase noise levels at the facility by six decibels or more, or to levels that exceed state and local criteria.

4. The operation of the replacement antennas will not increase radio frequency emissions at the facility to a level at or above the Federal Communications Commission safety standard.

5. The proposed modifications will not cause a change or alteration in the physical or environmental characteristics of the site.

6. The existing structure and its foundation can support the proposed loading.

For the foregoing reasons, T-Mobile respectfully submits that the proposed modifications to the above referenced telecommunications facility constitute an exempt modification under R.C.S.A. § 16-50j-72(b)(2).

Sincerely,

Kyle Richers
Transcend Wireless
Cell: 908-447-4716
Email: krichers@transcendwireless.com

Attachments
cc: Mark Nickerson - Town of East Lyme First Selectman
Gary Goeschel – Town of East Lyme Director of Planning
Connecticut State Police (Brian Benito) – Tower and Property Owner

Kyle Richers

From: UPS Quantum View <pkginfo@ups.com>
Sent: Wednesday, June 5, 2019 9:04 AM
To: krichers@transcendwireless.com
Subject: UPS Ship Notification, Reference Number 1: CT11330A CSC EO

You have a package coming.

Scheduled Delivery Date: Thursday, 06/06/2019

This message was sent to you at the request of TRANSCEND WIRELESS to notify you that the shipment information below has been transmitted to UPS. The physical package may or may not have actually been tendered to UPS for shipment. To verify the actual transit status of your shipment, click on the tracking link below.

Shipment Details

From:	TRANSCEND WIRELESS
Tracking Number:	1ZV257424290331438
Ship To:	Mark Nickerson Town of East Lyme 108 Pennsylvania Ave NIANTIC, CT 063572510 US
UPS Service:	UPS GROUND
Number of Packages:	1
Scheduled Delivery:	06/06/2019
Signature Required:	A signature is required for package delivery
Weight:	1.0 LBS
Reference Number 1:	CT11330A CSC EO

Download the UPS mobile app

Kyle Richers

From: UPS Quantum View <pkginfo@ups.com>
Sent: Wednesday, June 5, 2019 9:06 AM
To: krichers@transcendwireless.com
Subject: UPS Ship Notification, Reference Number 1: CT11330A CSC ZO

You have a package coming.

Scheduled Delivery Date: Thursday, 06/06/2019

This message was sent to you at the request of TRANSCEND WIRELESS to notify you that the shipment information below has been transmitted to UPS. The physical package may or may not have actually been tendered to UPS for shipment. To verify the actual transit status of your shipment, click on the tracking link below.

Shipment Details

From:	TRANSCEND WIRELESS
Tracking Number:	1ZV257424292909445
Ship To:	GARY A. GOESCHEL II Town of East Lyme 108 Pennsylvania Ave NIANTIC, CT 063572510 US
UPS Service:	UPS GROUND
Number of Packages:	1
Scheduled Delivery:	06/06/2019
Signature Required:	A signature is required for package delivery
Weight:	1.0 LBS
Reference Number 1:	CT11330A CSC ZO

Download the UPS mobile app

Kyle Richers

From: UPS Quantum View <pkginfo@ups.com>
Sent: Wednesday, June 5, 2019 9:10 AM
To: krichers@transcendwireless.com
Subject: UPS Ship Notification, Reference Number 1: CT11040D/ CT11330A CSC LL

You have a package coming.

Scheduled Delivery Date: Thursday, 06/06/2019

This message was sent to you at the request of TRANSCEND WIRELESS to notify you that the shipment information below has been transmitted to UPS. The physical package may or may not have actually been tendered to UPS for shipment. To verify the actual transit status of your shipment, click on the tracking link below.

Shipment Details

From:	TRANSCEND WIRELESS
Tracking Number:	1ZV257424291691459
Ship To:	Brian Benito Connecticut State Police 1111 Country Club Road MIDDLETOWN, CT 064572389 US
UPS Service:	UPS GROUND
Number of Packages:	1
Scheduled Delivery:	06/06/2019
Signature Required:	A signature is required for package delivery
Weight:	1.0 LBS
Reference Number 1:	CT11040D/ CT11330A CSC LL

Download the UPS mobile app

6 STONE RANCH RD

Location	6 STONE RANCH RD	**Mblu**	28.0/ 1/ / /
Acct#	007572	**Owner**	CONNECTICUT STATE OF
Assessment	$2,725,730	**Appraisal**	$3,893,900
PID	6441	**Building Count**	1

Current Value

Appraisal			
Valuation Year	**Improvements**	**Land**	**Total**
2016	$0	$3,893,900	$3,893,900
Assessment			
Valuation Year	**Improvements**	**Land**	**Total**
2016	$0	$2,725,730	$2,725,730

Owner of Record

Owner	CONNECTICUT STATE OF	**Sale Price**	$0
Co-Owner	STONE RANCH MILITARY CAMP	**Certificate**	
Address	STATE OFFICE BLDG HARTFORD, CT 06106	**Book & Page**	31/ 388
		Sale Date	05/28/1931

Ownership History

Ownership History
No Data for Ownership History

Building Information

Building 1 : Section 1

Year Built:	
Living Area:	0
Replacement Cost:	$0
Building Percent Good:	
Replacement Cost Less Depreciation:	$0

Building Attributes	
Field	**Description**

Style	Vacant Land
Model	
Grade:	
Stories:	
Occupancy	
Exterior Wall 1	
Exterior Wall 2	
Roof Structure:	
Roof Cover	
Interior Wall 1	
Interior Wall 2	
Interior Flr 1	
Interior Flr 2	
Heat Fuel	
Heat Type:	
AC Type:	
Total Bedrooms:	
Total Bthrms:	
Total Half Baths:	
Total Xtra Fixtrs:	
Total Rooms:	
Bath Style:	
Kitchen Style:	

Building Photo

(http://images.vgsi.com/photos2/EastLymeCTPhotos//default.jpg

Building Layout

(http://images.vgsi.com/photos2/EastLymeCTPhotos//Sketches/6

Building Sub-Areas (sq ft)	Legend
No Data for Building Sub-Areas	

Extra Features

Extra Features	Legend
No Data for Extra Features	

Land

Land Use

Use Code	9010
Description	STATE MDL-00
Zone	R40
Neighborhood	0040
Alt Land Appr	No
Category	

Land Line Valuation

Size (Acres)	1026.80
Frontage	0
Depth	0
Assessed Value	$2,725,730
Appraised Value	$3,893,900

Outbuildings

Outbuildings	Legend

No Data for Outbuildings

Valuation History

Appraisal			
Valuation Year	**Improvements**	**Land**	**Total**
2018	$0	$3,893,900	$3,893,900
2017	$0	$3,893,900	$3,893,900
2016	$0	$3,893,900	$3,893,900

Assessment			
Valuation Year	**Improvements**	**Land**	**Total**
2018	$0	$2,725,730	$2,725,730
2017	$0	$2,725,730	$2,725,730
2016	$0	$2,725,730	$2,725,730

(c) 2019 Vision Government Solutions, Inc. All rights reserved.

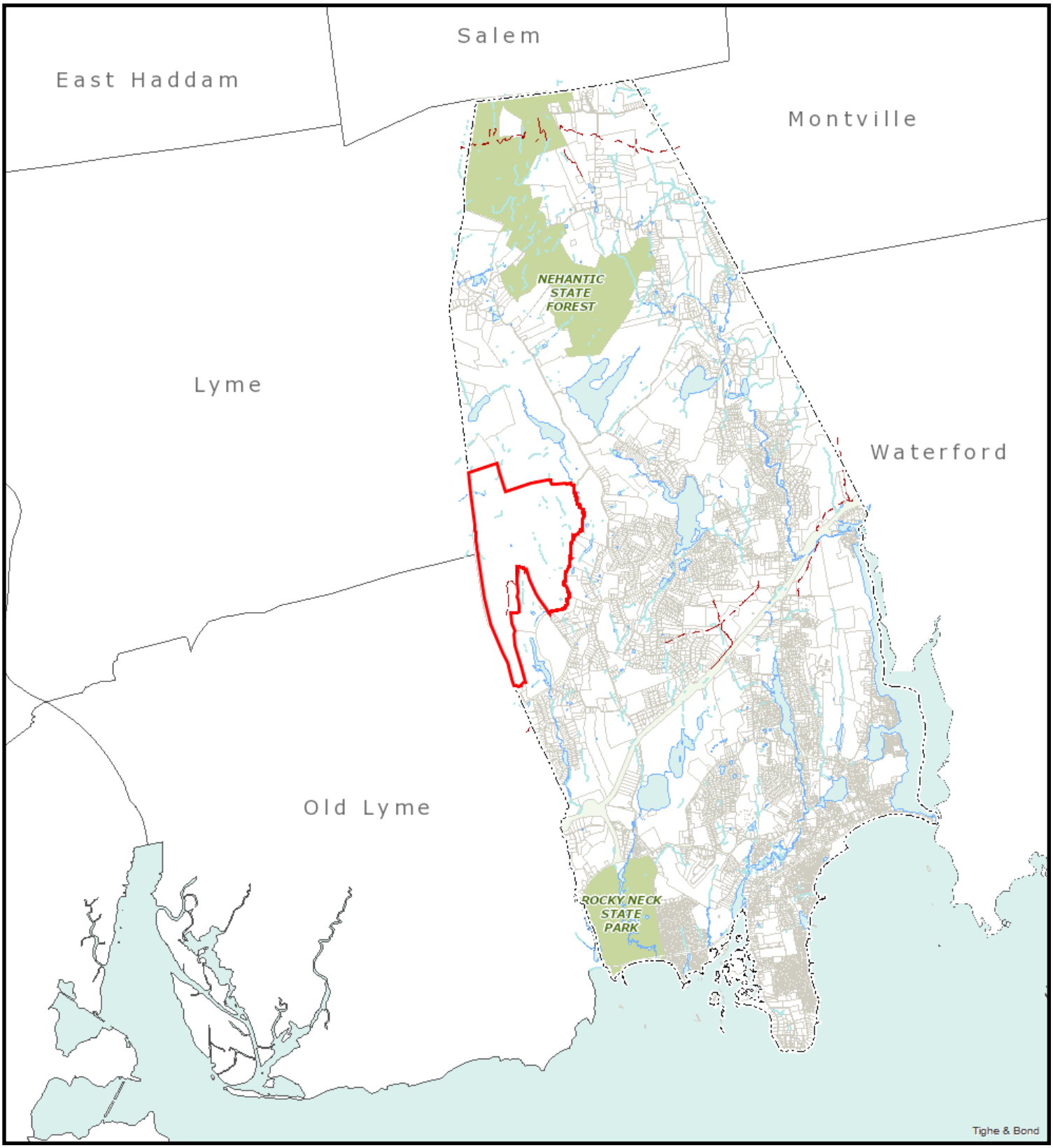

5/30/2019 10:07:27 AM

Scale: 1"=8000'

Scale is approximate

The information depicted on this map is for planning purposes only. It is not adequate for legal boundary definition, regulatory interpretation, or parcel-level analyses.

ORIGINAL

DOCKET NO. 160 - An application of the Department of Public Safety, Division of State Police for a Certificate of Environmental Compatibility and Public Need for the construction, operation, and maintenance of a telecommunications facility located approximately 6,180 feet northwest from the intersection of Stone Ranch Road and Boston Post Road (U.S. 1) on Pump House Hill Road in East Lyme, Connecticut.	:	Connecticut
	:	Siting
	:	Council
	:	September 29, 1993

FILE COPY

DECISION AND ORDER

Pursuant to the foregoing Findings of Fact and Opinion, the Connecticut Siting Council (Council) finds that the effects associated with the construction, operation, and maintenance of a telecommunications facility at the proposed site on the Stone Ranch Military Reservation (Stone Ranch) in East Lyme, Connecticut, including effects on the natural environment; ecological integrity and balance; public health and safety; scenic, historic, and recreational values; forests and parks; air and water purity; and fish and wildlife are not disproportionate either alone or cumulatively with other effects when compared to need, are not in conflict with the policies of the State concerning such effects, and are not sufficient reason to deny the application, and therefore directs that a Certificate of Environmental Compatibility and Public Need, as provided by section 16-50k of the General Statutes of Connecticut (CGS), be issued to the Connecticut Department of Public Safety, Division of State Police, for the construction, operation, and maintenance of a telecommunications facility at the proposed Stone Ranch site off of Pump House Hill Road in East Lyme, Connecticut.

The facility shall be constructed, operated, and maintained substantially as specified in the Council's record in this proceeding, and subject to the following conditions:

1. The proposed self-supporting lattice tower shall be designed no taller than necessary to provide the proposed communications and in no event shall it exceed a total height of 154 feet above ground level with antennas and appurtenances.

2. The Certificate holder shall prepare a Development and Management (D&M) plan for the site in accordance with sections 16-50j-75 through 16-50j-77 of the Regulations of State Agencies. The D&M plan shall be submitted to and approved by the Council prior to the commencement of facility construction and shall include detailed plans for the tower, tower foundation, and tower lighting; locations of all antennas to be attached to this tower; access from a public road including all improvements to the

accessway; utility line installation; equipment building; erosion and sediment controls; and security fence.

3. The Certificate holder shall comply with all existing and future radio frequency (RF) standards promulgated by State or federal regulatory agencies. Upon the establishment of any new governmental RF standards, the Certificate holder shall provide such notice to the Council and the facility granted herein shall be brought into compliance with such standards as soon as practicable.

4. The Certificate holder shall provide the Council a recalculated report of radio frequency power density if and when circumstances in operation cause an increase in the power density above the levels used herein by the Council to render its decision.

5. The Certificate holder shall permit public or private entities to share space on the proposed tower for fair consideration, or shall provide any requesting party with specific legal, technical, environmental, or economic reasons precluding such tower sharing.

6. If the facility does not initially provide, or permanently ceases to provide CSP telecommunications service following completion of construction, this Decision and Order shall be void, and the tower and all associated equipment shall be dismantled and removed or re-application for any new use shall be made to the Council before any such new use is made.

Unless otherwise approved by the Council, this Decision and Order shall be void if all construction authorized herein is not completed within five (5) years of the effective date of this Decision and Order or within five years after all appeals to this Decision and Order have been resolved.

Pursuant to CGS section 16-50p, we hereby direct that a copy of the Findings of Fact, Opinion, and Decision and Order be served on each person listed below, and notice of issuance shall be published in The Day and the Niantic News.

By this Decision and Order, the Council disposes of the legal rights, duties, and privileges of each party named or admitted to the proceeding in accordance with RSA section 16-50j-17.

The party to this proceeding is:

APPLICANT	ITS REPRESENTATIVES
Connecticut State Police	Mr. George L. Davis Emergency Telecommunications Engineer Telecommunications Section Department of Public Safety Division of State Police 294 Colony Street, Bldg. 5 Meriden, CT 06450 L. D. McCallum and Stephen R. Sarnoski Office of the Attorney General MacKenzie Hall 110 Sherman Street Hartford, CT 06105

7326E

T-Mobile

WIRELESS COMMUNICATIONS FACILITY

EAST LYME/RT 1_1
SITE ID: CT11330A
6 STONE RANCH RD
EAST LYME, CT 06333

T-MOBILE RF CONFIGURATION

67D93D4_1QP+2HP
(U21 MARKET)

PROJECT SUMMARY

1. THE PROPOSED SCOPE OF WORK CONSISTS OF A MODIFICATION TO THE EXISTING UNMANNED TELECOMMUNICATIONS FACILITY INCLUDING THE FOLLOWING:

   A. REMOVE (3) EXISTING ANTENNAS, TYP. (1) PER SECTOR
   B. REMOVE (6) EXISTING TMA'S
   C. INSTALL (3) PROPOSED ANTENNAS, TYP. (1) PER SECTOR
   D. INSTALL (9) PROPOSED RRUS, TYP. (3) PER SECTOR
   E. INSTALL (3) DUAL SWIVEL MOUNTS, TYP. OF (1) PER SECTOR TO ACCOMMODATE PROPOSED RADIO REMOTE UNITS
   F. UPGRADE 100 AMP TO 200 AMP MAIN
   G. INSTALL NEW 125 BREAKER
   H. INSTALL (3) NEW 6x12 HYBRID CABLE, REMOVE ALL EXISTING COAX
   I. REMOVE (3) EXISTING ANTENNA MOUNTS FOR (3) NEW V-SECTOR FRAMES
   J. REPLACE (1) DUS41 WITH (1) BB 6630 FOR LTE
   K. INSTALL (1) ADDITIONAL BB6630 FOR FUTURE 5G N600

GENERAL NOTES

1. ALL WORK SHALL BE IN ACCORDANCE WITH THE 2015 INTERNATIONAL BUILDING CODE AS MODIFIED BY THE 2018 CONNECTICUT SUPPLEMENT, INCLUDING THE TIA/EIA-222 REVISION "G" "STRUCTURAL STANDARDS FOR STEEL ANTENNA TOWERS AND SUPPORTING STRUCTURES." 2018 CONNECTICUT FIRE SAFETY CODE, 2017 NATIONAL ELECTRICAL CODE AND LOCAL CODES.
2. CONTRACTOR SHALL REVIEW ALL DRAWINGS AND SPECIFICATIONS IN THE CONTRACT DOCUMENT SET. CONTRACTOR SHALL COORDINATE ALL WORK SHOWN IN THE SET OF DRAWINGS. THE CONTRACTOR SHALL PROVIDE A COMPLETE SET OF DRAWINGS TO ALL SUBCONTRACTORS AND ALL RELATED PARTIES. THE SUBCONTRACTORS SHALL EXAMINE ALL THE DRAWINGS AND SPECIFICATIONS FOR THE INFORMATION THAT AFFECTS THEIR WORK.
3. CONTRACTOR SHALL PROVIDE A COMPLETE BUILD-OUT WITH ALL FINISHES, STRUCTURAL, MECHANICAL, AND ELECTRICAL COMPONENTS AND PROVIDE ALL ITEMS AS SHOWN OR INDICATED ON THE DRAWINGS OR IN THE WRITTEN SPECIFICATIONS.
4. CONTRACTOR SHALL FURNISH ALL MATERIAL, LABOR AND EQUIPMENT TO COMPLETE THE WORK AND FURNISH A COMPLETED JOB ALL IN ACCORDANCE WITH LOCAL AND STATE GOVERNING AUTHORITIES AND OTHER AUTHORITIES HAVING LAWFUL JURISDICTION OVER THE WORK.
5. CONTRACTOR SHALL SECURE AND PAY FOR ALL PERMITS AND ALL INSPECTIONS REQUIRED AND SHALL ALSO PAY FEES REQUIRED FOR THE GENERAL CONSTRUCTION, PLUMBING, ELECTRICAL AND HVAC. PERMITS SHALL BE PAID FOR BY THE RESPECTIVE SUBCONTRACTORS.
6. CONTRACTOR SHALL MAINTAIN A CURRENT SET OF DRAWINGS AND SPECIFICATIONS ON SITE AT ALL TIMES AND INSURE DISTRIBUTION OF NEW DRAWINGS TO SUBCONTRACTORS AND OTHER RELEVANT PARTIES AS SOON AS THEY ARE MADE AVAILABLE. ALL OLD DRAWINGS SHALL BE MARKED VOID AND REMOVED FROM THE CONTRACT AREA. THE CONTRACTOR SHALL FURNISH AN 'AS-BUILT' SET OF DRAWINGS TO OWNER UPON COMPLETION OF PROJECT.
7. LOCATION OF EQUIPMENT, AND WORK SUPPLIED BY OTHERS THAT IS DIAGRAMMATICALLY INDICATED ON THE DRAWINGS SHALL BE DETERMINED BY THE CONTRACTOR. THE CONTRACTOR SHALL DETERMINE LOCATIONS AND DIMENSIONS SUBJECT TO STRUCTURAL CONDITIONS AND WORK OF THE SUBCONTRACTORS.
8. THE CONTRACTOR IS SOLELY RESPONSIBLE TO DETERMINE CONSTRUCTION PROCEDURE AND SEQUENCE, AND TO ENSURE THE SAFETY OF THE EXISTING STRUCTURES AND ITS COMPONENT PARTS DURING CONSTRUCTION. THIS INCLUDES THE ADDITION OF WHATEVER SHORING, BRACING, UNDERPINNING, ETC. THAT MAY BE NECESSARY.
9. DRAWINGS INDICATE THE MINIMUM STANDARDS, BUT IF ANY WORK SHOULD BE INDICATED TO BE SUBSTANDARD TO ANY ORDINANCES, LAWS, CODES, RULES, OR REGULATIONS BEARING ON THE WORK, THE CONTRACTOR SHALL INCLUDE IN HIS WORK AND SHALL EXECUTE THE WORK CORRECTLY IN ACCORDANCE WITH SUCH ORDINANCES, LAWS, CODES, RULES OR REGULATIONS WITH NO INCREASE IN COSTS.
10. ALL UTILITY WORK SHALL BE IN ACCORDANCE WITH LOCAL UTILITY COMPANY REQUIREMENTS AND SPECIFICATIONS.
11. ALL EQUIPMENT AND PRODUCTS PURCHASED ARE TO BE REVIEWED BY CONTRACTOR AND ALL APPLICABLE SUBCONTRACTORS FOR ANY CONDITION PER MFR.'S RECOMMENDATIONS. CONTRACTOR TO SUPPLY THESE ITEMS AT NO COST TO OWNER OR CONSTRUCTION MANAGER.
12. ANY AND ALL ERRORS, DISCREPANCIES, AND 'MISSED" ITEMS ARE TO BE BROUGHT TO THE ATTENTION OF THE T-MOBILE CONSTRUCTION MANAGER DURING THE BIDDING PROCESS BY THE CONTRACTOR. ALL THESE ITEMS ARE TO BE INCLUDED IN THE BID. NO 'EXTRA' WILL BE ALLOWED FOR MISSED ITEMS.
13. CONTRACTOR SHALL BE RESPONSIBLE FOR ALL ON-SITE SAFETY FROM THE TIME THE JOB IS AWARDED UNTIL ALL WORK IS COMPLETE AND ACCEPTED BY THE OWNER.
14. CONTRACTOR TO REVIEW ALL SHOP DRAWINGS AND SUBMIT COPY TO ENGINEER FOR APPROVAL. DRAWINGS MUST BEAR THE CHECKER'S INITIALS BEFORE SUBMITTING TO THE CONSTRUCTION MANAGER FOR REVIEW.
15. THE CONTRACTOR SHALL FIELD VERIFY ALL DIMENSIONS, ELEVATIONS, ANGLES, AND EXISTING CONDITIONS AT THE SITE, PRIOR TO FABRICATION AND/OR INSTALLATION OF ANY WORK IN THE CONTRACT AREA.
16. COORDINATION, LAYOUT, FURNISHING AND INSTALLATION OF CONDUIT AND ALL APPURTENANCES REQUIRED FOR PROPER INSTALLATION OF ELECTRICAL AND TELECOMMUNICATION SERVICE SHALL BE THE SOLE RESPONSIBILITY OF THE CONTRACTOR.
17. ALL DAMAGE CAUSED TO ANY EXISTING STRUCTURE SHALL BE THE SOLE RESPONSIBILITY OF THE CONTRACTOR. THE CONTRACTOR WILL BE HELD LIABLE FOR ALL REPAIRS REQUIRED FOR EXISTING STRUCTURES IF DAMAGED DURING CONSTRUCTION ACTIVITIES.
18. THE CONTRACTOR SHALL CONTACT "CALL BEFORE YOU DIG" AT LEAST 48 HOURS PRIOR TO ANY EXCAVATIONS AT 1-800-922-4455. ALL UTILITIES SHALL BE IDENTIFIED AND CLEARLY MARKED. CONTRACTOR SHALL MAINTAIN AND PROTECT MARKED UTILITIES THROUGHOUT PROJECT COMPLETION.
19. CONTRACTOR SHALL COMPLY WITH OWNERS ENVIRONMENTAL ENGINEER ON ALL METHODS AND PROVISIONS FOR ALL EXCAVATION ACTIVITIES INCLUDING SOIL DISPOSAL. ALL BACKFILL MATERIALS TO BE PROVIDED BY THE CONTRACTOR.

SITE DIRECTIONS

FROM: 35 GRIFFIN ROAD SOUTH
BLOOMFIELD, CT 06002

TO: 6 STONE RANCH RD
EAST LYME, CT 06333

1.	START OUT GOING NORTH ON GRIFFIN RD TOWARD HARTMAN RD.	0.30 MI.
2.	TAKE THE 2ND RIGHT ONTO DAY HILL RD.	0.14 MI.
3.	TAKE THE 1ST RIGHT ONTO BLUE HILLS AVENUE EXT/CT-187. CONTINUE TO FOLLOW CT-187.	0.64 MI.
4.	STAY STRAIGHT TO GO ONTO BLUE HILLS AVE/CT-187.	1.24 MI.
5.	TURN LEFT ONTO OLD WINDSOR RD/CT-305. CONTINUE TO FOLLOW CT-305.	2.33 MI.
6.	MERGE ONTO I-91 S TOWARD HARTFORD.	16.58 MI.
7.	MERGE ONTO CT-9 S VIA EXIT 22S ON THE LEFT TOWARD MIDDLETOWN/OLD SAYBROOK.	29.24 MI.
8.	MERGE ONTO I-95 N VIA THE EXIT ON THE LEFT TOWARD PROVIDENCE/NEW LONDON.	5.74 MI.
9.	TAKE THE FOUR MILE RIVER RD EXIT, EXIT 71.	0.29 MI.
10.	TURN RIGHT ONTO FOUR MILE RIVER RD.	1.51 MI.
11.	TURN RIGHT ONTO BOSTON POST RD/US-1 N.	0.88 MI.
12.	TURN LEFT ONTO STONE RANCH RD.	0.55 MI.
13.	6 STONE RANCH RD, EAST LYME, CT 06333-1125, 6 STONE RANCH RD IS ON THE LEFT.	

VICINITY MAP

SCALE: 1" = 1000'

NORTH

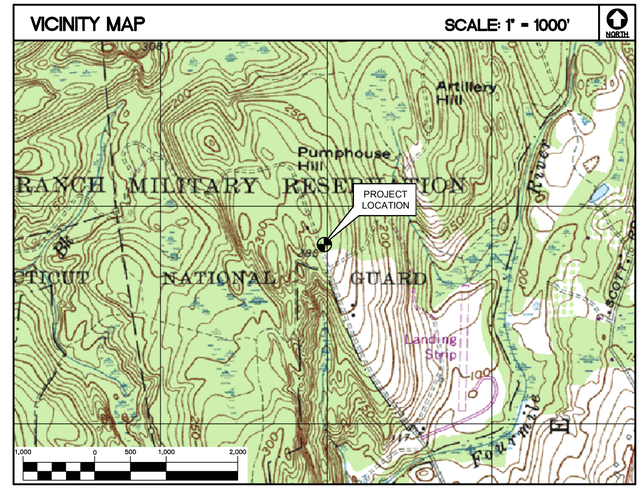

PROJECT INFORMATION

SITE NAME:	EAST LYME / RT 1_1
SITE ID:	CT11330A
SITE ADDRESS:	6 STONE RANCH RD EAST LYME, CT 06333
APPLICANT:	T-MOBILE NORTHEAST, LLC 35 GRIFFIN ROAD SOUTH BLOOMFIELD, CT 06002
CONTACT PERSON:	DAN REID (PROJECT MANAGER) TRANSCEND WIRELESS, LLC (203) 592-8291
ENGINEER:	CENTEK ENGINEERING, INC. 63-2 NORTH BRANFORD RD. BRANFORD, CT 06405
PROJECT COORDINATES:	LATITUDE: 41'-21'-56.95" N LONGITUDE: 72'-15'-58.33" W GROUND ELEVATION: 306'± AMSL SITE COORDINATES AND GROUND ELEVATION REFERENCED FROM GOOGLE EARTH.

SHEET INDEX

SHT. NO.	DESCRIPTION	REV.
T-1	TITLE SHEET	0
N-1	DESIGN BASIS AND SITE NOTES	0
C-1	SITE LOCATION PLAN	0
C-2	COMPOUND PLAN AND ELEVATION	0
C-3	ANTENNA MOUNTING CONFIGURATION	0
E-1	TYPICAL ELECTRICAL DETAILS	0
E-2	TYPICAL ELECTRICAL DETAILS	0

REV.	DATE	DRAWN BY	CHK'D BY	DESCRIPTION
0	06/03/19	KANJR	CAG	CONSTRUCTION DRAWINGS- ISSUED FOR CONSTRUCTION

PROFESSIONAL ENGINEER SEAL

STATE OF CONNECTICUT · CHRISTOPHER A. GAMBARDELLA · 27917 · LICENSED PROFESSIONAL ENGINEER

T-Mobile

Transcend Wireless

CENTEK engineering
Centered on Solutions™
(203) 488-0580
(203) 488-8587 Fax
63-2 North Branford Road
Branford, CT 06405
www.CentekEng.com

T-MOBILE NORTHEAST LLC
WIRELESS COMMUNICATIONS FACILITY
EAST LYME / RT 1_1
SITE ID: CT11330A
6 STONE RANCH RD
EAST LYME, CT 06333

DATE: 05/08/19
SCALE: AS NOTED
JOB NO. 19027.07

TITLE SHEET

T-1

Sheet No. 1 of 7

DESIGN BASIS:

GOVERNING CODE: 2015 INTERNATIONAL BUILDING (IBC) AS MODIFIED BY THE 2018 CT STATE BUILDING CODE AND AMENDMENTS.

1. DESIGN CRITERIA:

- WIND LOAD: PER TIA 222 G (ANTENNA MOUNTS): 105–120 MPH (3 SECOND GUST)
- RISK CATEGORY: II (BASED ON IBC TABLE 1604.5)
- NOMINAL DESIGN SPEED (OTHER STRUCTURE): 105 MPH (Vasd) (EXPOSURE B/IMPORTANCE FACTOR 1.0 BASED ON ASCE 7–10) PER 2015 INTERNATIONAL BUILDING CODE (IBC) AS MODIFIED BY THE 2018 CONNECTICUT STATE BUILDING CODE.
- SEISMIC LOAD (DOES NOT CONTROL): PER ASCE 7–10 MINIMUM DESIGN LOADS FOR BUILDING AND OTHER STRUCTURES.

GENERAL NOTES:

1. ALL CONSTRUCTION SHALL BE IN COMPLIANCE WITH THE GOVERNING BUILDING CODE.
2. DRAWINGS INDICATE THE MINIMUM STANDARDS, BUT IF ANY WORK SHOULD BE INDICATED TO BE SUBSTANDARD TO ANY ORDINANCES, LAWS, CODES, RULES, OR REGULATIONS BEARING ON THE WORK, THE CONTRACTOR SHALL INCLUDE IN HIS WORK AND SHALL EXECUTE THE WORK CORRECTLY IN ACCORDANCE WITH SUCH ORDINANCES, LAWS, CODES, RULES OR REGULATIONS WITH NO INCREASE IN COSTS.
3. BEFORE BEGINNING THE WORK, THE CONTRACTOR IS RESPONSIBLE FOR MAKING SUCH INVESTIGATIONS CONCERNING PHYSICAL CONDITIONS (SURFACE AND SUBSURFACE) AT OR CONTIGUOUS TO THE SITE WHICH MAY AFFECT PERFORMANCE AND COST OF THE WORK.
4. DIMENSIONS AND DETAILS SHALL BE CHECKED AGAINST EXISTING FIELD CONDITIONS.
5. THE CONTRACTOR SHALL VERIFY AND COORDINATE THE SIZE AND LOCATION OF ALL OPENINGS, SLEEVES AND ANCHOR BOLTS AS REQUIRED BY ALL TRADES.
6. ALL DIMENSIONS, ELEVATIONS, AND OTHER REFERENCES TO EXISTING STRUCTURES, SURFACE, AND SUBSURFACE CONDITIONS ARE APPROXIMATE. NO GUARANTEE IS MADE FOR THE ACCURACY OR COMPLETENESS OF THE INFORMATION SHOWN. THE CONTRACTOR SHALL VERIFY AND COORDINATE ALL DIMENSIONS, ELEVATIONS, ANGLES WITH EXISTING CONDITIONS AND WITH ARCHITECTURAL AND SITE DRAWINGS BEFORE PROCEEDING WITH ANY WORK.
7. AS THE WORK PROGRESSES, THE CONTRACTOR SHALL NOTIFY THE OWNER OF ANY CONDITIONS WHICH ARE IN CONFLICT OR OTHERWISE NOT CONSISTENT WITH THE CONSTRUCTION DOCUMENTS AND SHALL NOT PROCEED WITH SUCH WORK UNTIL THE CONFLICT IS SATISFACTORILY RESOLVED.
8. THE CONTRACTOR SHALL COMPLY WITH ALL APPLICABLE SAFETY CODES AND REGULATIONS DURING ALL PHASES OF CONSTRUCTION. THE CONTRACTOR IS SOLELY RESPONSIBLE FOR PROVIDING AND MAINTAINING ADEQUATE SHORING, BRACING, AND BARRICADES AS MAY BE REQUIRED FOR THE PROTECTION OF EXISTING PROPERTY, CONSTRUCTION WORKERS, AND FOR PUBLIC SAFETY.
9. THE CONTRACTOR IS SOLELY RESPONSIBLE TO DETERMINE CONSTRUCTION PROCEDURE AND SEQUENCE, AND TO ENSURE THE SAFETY OF THE EXISTING STRUCTURES AND ITS COMPONENT PARTS DURING CONSTRUCTION. THIS INCLUDES THE ADDITION OF WHATEVER SHORING, BRACING, UNDERPINNING, ETC. THAT MAY BE NECESSARY. MAINTAIN EXISTING SITE OPERATIONS, COORDINATE WORK WITH NORTHEAST UTILITIES
10. THE STRUCTURE IS DESIGNED TO BE SELF–SUPPORTING AND STABLE AFTER FOUNDATION REMEDIATION WORK IS COMPLETE. IT IS THE CONTRACTOR'S SOLE RESPONSIBILITY TO DETERMINE ERECTION PROCEDURE AND SEQUENCE AND TO ENSURE THE SAFETY OF THE STRUCTURE AND ITS COMPONENT PARTS DURING ERECTION. THIS INCLUDES THE ADDITION OF WHATEVER SHORING, TEMPORARY BRACING, GUYS OR TIEDOWNS, WHICH MIGHT BE NECESSARY.
11. ALL DAMAGE CAUSED TO ANY EXISTING STRUCTURE SHALL BE THE SOLE RESPONSIBILITY OF THE CONTRACTOR. THE CONTRACTOR WILL BE HELD LIABLE FOR ALL REPAIRS REQUIRED FOR EXISTING STRUCTURES IF DAMAGED DURING CONSTRUCTION ACTIVITIES.
12. SHOP DRAWINGS, CONCRETE MIX DESIGNS, TEST REPORTS, AND OTHER SUBMITTALS PERTAINING TO STRUCTURAL WORK SHALL BE FORWARDED TO THE OWNER FOR REVIEW BEFORE FABRICATION AND/OR INSTALLATION IS MADE. SHOP DRAWINGS SHALL INCLUDE ERECTION DRAWINGS AND COMPLETE DETAILS OF CONNECTIONS AS WELL AS MANUFACTURER'S SPECIFICATION DATA WHERE APPROPRIATE. SHOP DRAWINGS SHALL BE CHECKED BY THE CONTRACTOR AND BEAR THE CHECKER'S INITIALS BEFORE BEING SUBMITTED FOR REVIEW.
13. NO DRILLING WELDING OR TAPING ON EVERSOURCE OWNED EQUIPMENT.
14. REFER TO DRAWING T1 FOR ADDITIONAL NOTES AND REQUIREMENTS.

STRUCTURAL STEEL

1. ALL STRUCTURAL STEEL IS DESIGNED BY ALLOWABLE STRESS DESIGN (ASD)

   A. STRUCTURAL STEEL (W SHAPES)---ASTM A992 (FY = 50 KSI)
   B. STRUCTURAL STEEL (OTHER SHAPES)---ASTM A36 (FY = 36 KSI)
   C. STRUCTURAL HSS (RECTANGULAR SHAPES)---ASTM A500 GRADE B, (FY = 46 KSI)
   D. STRUCTURAL HSS (ROUND SHAPES)---ASTM A500 GRADE B, (FY = 42 KSI)
   E. PIPE---ASTM A53 (FY = 35 KSI)
   F. CONNECTION BOLTS---ASTM A325–N
   G. U–BOLTS---ASTM A36
   H. ANCHOR RODS---ASTM F 1554
   I. WELDING ELECTRODE---ASTM E 70XX

2. CONTRACTOR TO REVIEW ALL SHOP DRAWINGS AND SUBMIT COPY TO ENGINEER FOR APPROVAL. DRAWINGS MUST BEAR THE CHECKER'S INITIALS BEFORE SUBMITTING TO THE ENGINEER FOR REVIEW. SHOP DRAWINGS SHALL INCLUDE THE FOLLOWING: SECTION PROFILES, SIZES, CONNECTION ATTACHMENTS, REINFORCING, ANCHORAGE, SIZE AND TYPE OF FASTENERS AND ACCESSORIES. INCLUDE ERECTION DRAWINGS, ELEVATIONS AND DETAILS.
3. STRUCTURAL STEEL SHALL BE DETAILED, FABRICATED AND ERECTED IN ACCORDANCE WITH THE LATEST PROVISIONS OF AISC MANUAL OF STEEL CONSTRUCTION.
4. PROVIDE ALL PLATES, CLIP ANGLES, CLOSURE PIECES, STRAP ANCHORS, MISCELLANEOUS PIECES AND HOLES REQUIRED TO COMPLETE THE STRUCTURE.
5. FIT AND SHOP ASSEMBLE FABRICATIONS IN THE LARGEST PRACTICAL SECTIONS FOR DELIVERY TO SITE.
6. INSTALL FABRICATIONS PLUMB AND LEVEL, ACCURATELY FITTED, AND FREE FROM DISTORTIONS OR DEFECTS.
7. AFTER ERECTION OF STRUCTURES, TOUCHUP ALL WELDS, ABRASIONS AND NON–GALVANIZED SURFACES WITH A 95% ORGANIC ZINC RICH PAINT IN ACCORDANCE WITH ASTM 780.
8. ALL STEEL MATERIAL (EXPOSED TO WEATHER) SHALL BE GALVANIZED AFTER FABRICATION IN ACCORDANCE WITH ASTM A123 "ZINC (HOT DIPPED GALVANIZED) COATINGS" ON IRONS AND STEEL PRODUCTS.
9. ALL BOLTS, ANCHORS AND MISCELLANEOUS HARDWARE SHALL BE GALVANIZED IN ACCORDANCE WITH ASTM A153 "ZINC COATING (HOT–DIP) ON IRON AND STEEL HARDWARE".
10. THE ENGINEER SHALL BE NOTIFIED OF ANY INCORRECTLY FABRICATED, DAMAGED OR OTHERWISE MISFITTING OR NON CONFORMING MATERIALS OR CONDITIONS TO REMEDIAL OR CORRECTIVE ACTION. ANY SUCH ACTION SHALL REQUIRE ENGINEER REVIEW.
11. CONNECTION ANGLES SHALL HAVE A MINIMUM THICKNESS OF 1/4 INCHES.
12. STRUCTURAL CONNECTION BOLTS SHALL CONFORM TO ASTM A325. ALL BOLTS SHALL BE 3/4" DIAMETER MINIMUM AND SHALL HAVE A MINIMUM OF TWO BOLTS, UNLESS OTHERWISE ON THE DRAWINGS.
13. LOCK WASHER ARE NOT PERMITTED FOR A325 STEEL ASSEMBLIES.
14. SHOP CONNECTIONS SHALL BE WELDED OR HIGH STRENGTH BOLTED.
15. MILL BEARING ENDS OF COLUMNS, STIFFENERS, AND OTHER BEARING SURFACES TO TRANSFER LOAD OVER ENTIRE CROSS SECTION.
16. FABRICATE BEAMS WITH MILL CAMBER UP.
17. LEVEL AND PLUMB INDIVIDUAL MEMBERS OF THE STRUCTURE TO AN ACCURACY OF 1:500, BUT NOT TO EXCEED 1/4" IN THE FULL HEIGHT OF THE COLUMN.
18. COMMENCEMENT OF STRUCTURAL STEEL WORK WITHOUT NOTIFYING THE ENGINEER OF ANY DISCREPANCIES WILL BE CONSIDERED ACCEPTANCE OF PRECEDING WORK.
19. INSPECTION AND TESTING OF ALL WELDING AND HIGH STRENGTH BOLTING SHALL BE PERFORMED BY AN INDEPENDENT TESTING LABORATORY.
20. FOUR COPIES OF ALL INSPECTION TEST REPORTS SHALL BE SUBMITTED TO THE ENGINEER WITHIN TEN (10) WORKING DAYS OF THE DATE OF INSPECTION.

REV.	DATE	DRAWN BY	CHK'D BY	DESCRIPTION
0	06/03/19	KANUR	CAG	CONSTRUCTION DRAWINGS– ISSUED FOR CONSTRUCTION

PROFESSIONAL ENGINEER SEAL

STATE OF CONNECTICUT · CHRISTOPHER A. GRIFFIN · 27517 · LICENSED PROFESSIONAL ENGINEER

T-Mobile

Transcend Wireless

CENTEK engineering
Centered on Solutions
(203) 488-0580
(203) 488-8587 Fax
63-2 North Branford Road
Branford, CT 06405
www.CentekEng.com

T–MOBILE NORTHEAST LLC
WIRELESS COMMUNICATIONS FACILITY
EAST LYME / RT 1_1
SITE ID: CT11330A
6 STONE RANCH RD
EAST LYME, CT 06333

DATE: 05/08/19
SCALE: AS NOTED
JOB NO. 19027.07

DESIGN BASIS AND SITE NOTES

N–1

Sheet No. 2 of 7

1 / C-1 **SITE LOCATION PLAN**
SCALE: 1" = 100'

APPROX. NORTH

GRAPHIC SCALE
100 0 50 100 200 400
(IN FEET)
1 inch = 100 ft.

REV.	DATE	DRAWN BY	CHK'D BY	DESCRIPTION
0	06/03/19	KANJR	CAG	CONSTRUCTION DRAWINGS– ISSUED FOR CONSTRUCTION

PROFESSIONAL ENGINEER SEAL

STATE OF CONNECTICUT · CHRISTOPHER A. GOUGH · 27917 · LICENSED PROFESSIONAL ENGINEER

T-Mobile

Transcend Wireless

CENTEK engineering
Centered on Solutions
(203) 488-0580
(203) 488-8587 Fax
63-2 North Branford Road
Branford, CT 06405
www.CentekEng.com

T-MOBILE NORTHEAST LLC
WIRELESS COMMUNICATIONS FACILITY
EAST LYME / RT 1_1
SITE ID: CT11330A
6 STONE RANCH RD
EAST LYME, CT 06333

DATE: 05/08/19
SCALE: AS NOTED
JOB NO. 19027.07

SITE LOCATION PLAN

C-1

Sheet No. 3 of 7

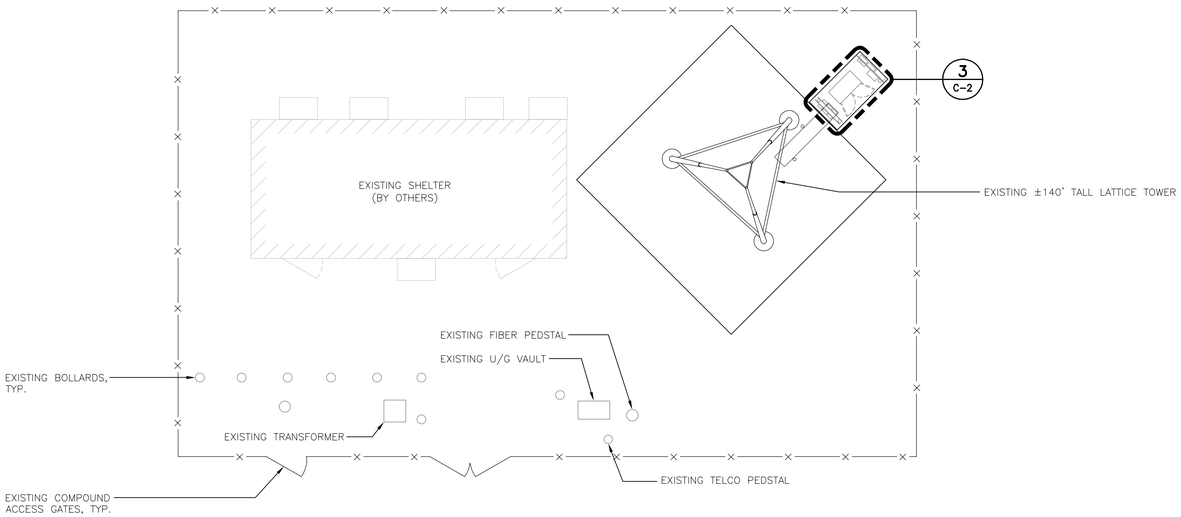

1 C-2 **COMPOUND PLAN**
SCALE: 1" = 10'

TRUE NORTH

GRAPHIC SCALE
10 0 5 10 20 40
(IN FEET)
1 inch = 10 ft.

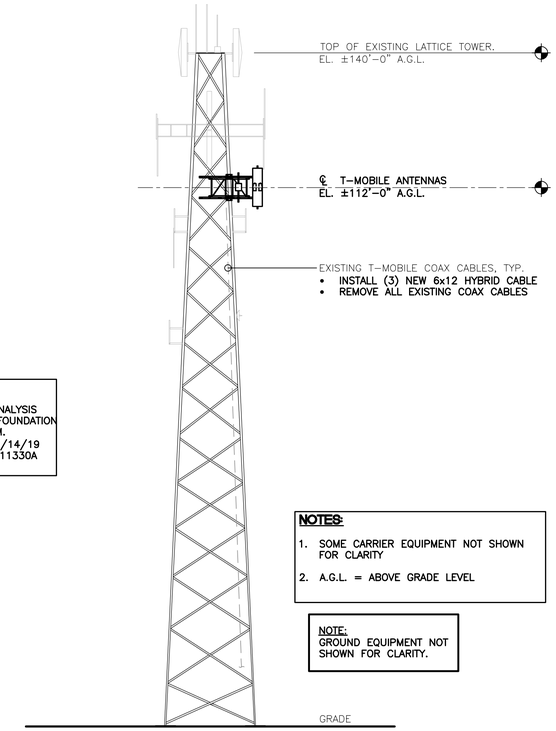

STRUCTURAL NOTE:

REFER TO STRUCTURAL ANALYSIS REPORT OF TOWER AND FOUNDATION AS PREPARED BY AAECOM.
DATED: 05/14/19
T-MOBILE SITE NAME: CT11330A

NOTES:

1. SOME CARRIER EQUIPMENT NOT SHOWN FOR CLARITY
2. A.G.L. = ABOVE GRADE LEVEL

NOTE:
GROUND EQUIPMENT NOT SHOWN FOR CLARITY.

2 C-2 **TOWER ELEVATION - PROPOSED**
SCALE: 1" = 15'

GRAPHIC SCALE
15 0 7.5 15 30 60
(IN FEET)
1 inch = 15 ft.

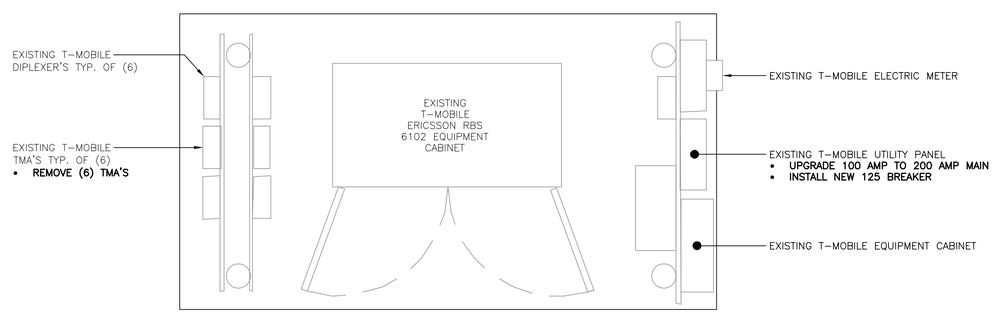

3 C-2 **EQUIPMENT PLAN - PROPOSED**
SCALE: 3/8" = 1'

TRUE NORTH

REV.	DATE	DRAWN BY	CHK'D BY	DESCRIPTION
0	06/03/19	KAN/JR	CAG	CONSTRUCTION DRAWINGS– ISSUED FOR CONSTRUCTION

PROFESSIONAL ENGINEER SEAL

STATE OF CONNECTICUT · CHRISTOPHER A. GRIFFIN · 27517 · LICENSED PROFESSIONAL ENGINEER

T-Mobile
Transcend Wireless

CENTEK engineering
Centered on Solutions™
(203) 488-0580
(203) 488-8587 Fax
63-2 North Branford Road
Branford, CT 06405
www.CentekEng.com

T-MOBILE NORTHEAST LLC
WIRELESS COMMUNICATIONS FACILITY
EAST LYME / RT 1_1
SITE ID: CT11330A
6 STONE RANCH RD
EAST LYME, CT 06333

DATE: 05/08/19
SCALE: AS NOTED
JOB NO. 19027.07

COMPOUND PLAN, AND ELEVATION

C-2

Sheet No. 4 of 7

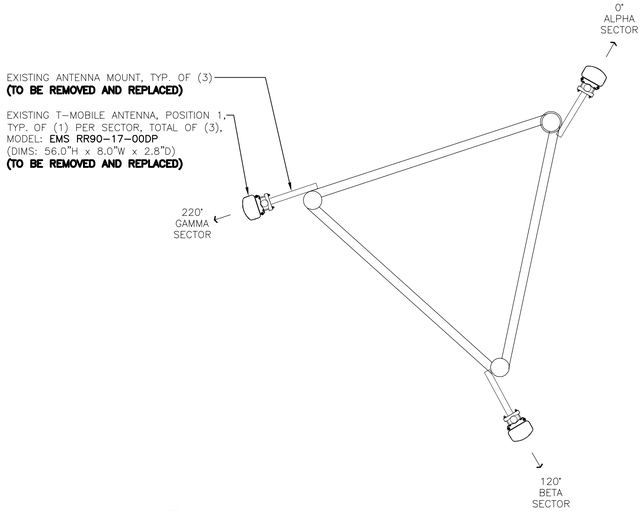

1 / C-3 **EXISTING ANTENNA MOUNTING CONFIGURATION TYP.**
SCALE: NONE
112'-0" ELEVATION

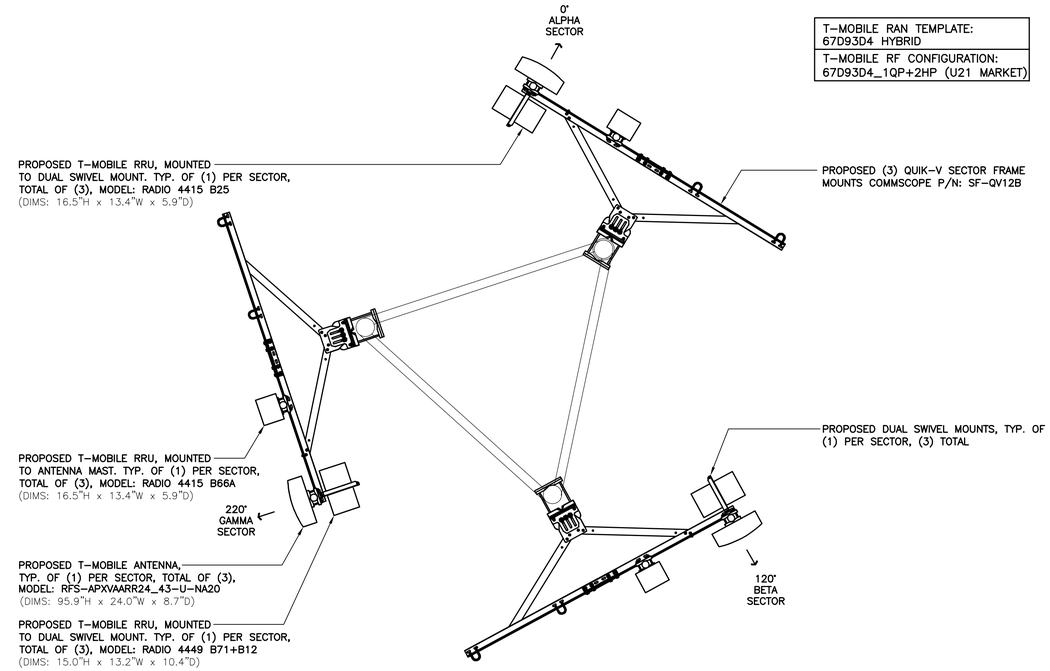

2 / C-3 **PROPOSED ANTENNA MOUNTING CONFIGURATION TYP.**
SCALE: NONE
112'-0" ELEVATION

ADDITIONAL ANTENNA MAST NOTE:

REPLACE EXISTING PIPE MAST WITH 2" STD (O.D = 2.375") x 9'-0" LONG PIPE @ RFS APXVAARR24_43-U-NA20

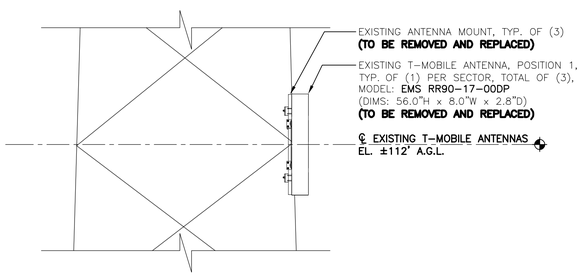

3 / C-3 **ANTENNA ELEVATION - EXISTING**
SCALE: NONE

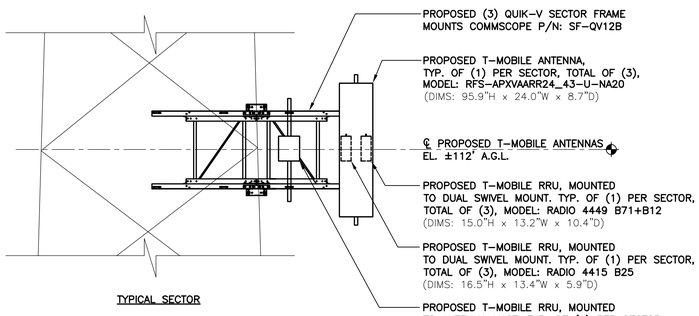

4 / C-3 **ANTENNA ELEVATION - PROPOSED**
SCALE: NONE

REV.	DATE	DRAWN BY	CHK'D BY	DESCRIPTION
0	06/03/19	KAN/JR	CAG	CONSTRUCTION DRAWINGS– ISSUED FOR CONSTRUCTION

PROFESSIONAL ENGINEER SEAL

CENTEK engineering
Centered on Solutions
(203) 488-0580
(203) 488-8587 Fax
63-2 North Branford Road
Branford, CT 06405
www.CentekEng.com

T-Mobile
Transcend Wireless

T-MOBILE NORTHEAST LLC
WIRELESS COMMUNICATIONS FACILITY
EAST LYME / RT 1_1
SITE ID: CT11330A
6 STONE RANCH RD
EAST LYME, CT 06333

DATE:	05/08/19
SCALE:	AS NOTED
JOB NO.	19027.07

ANTENNA MOUNTING CONFIGURATION

C-3

Sheet No. 5 of 7

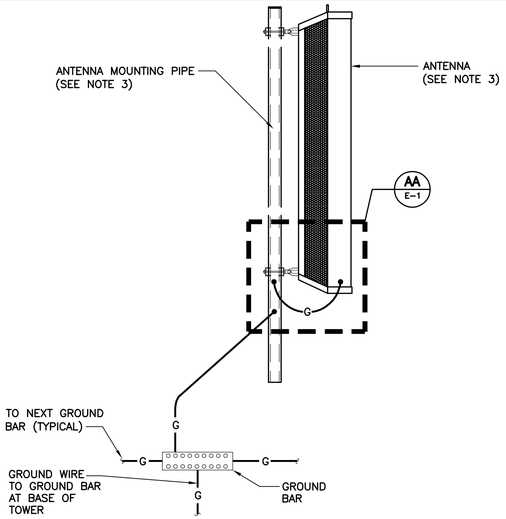

NOTES:

1. BOND COAXIAL CABLE GROUND KITS TO EACH OWNER'S GROUND BAR ALONG ENTIRE COAX RUN FROM ANTENNA TO SHELTER.
2. BOND ALL EQUIPMENT TO GROUND PER NEC AND MANUFACTURERS SPECIFICATIONS.
3. DETAIL IS TYPICAL FOR ALL ANTENNA SECTORS, INCLUDING GPS ANTENNA.

1 / E-1 TYPICAL ANTENNA GROUNDING DETAIL

SCALE: NONE

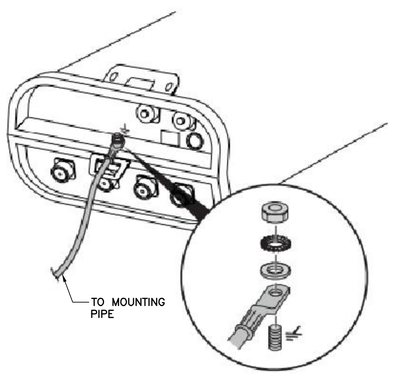

AA / E-1 TYPICAL ANTENNA GROUNDING DETAIL

SCALE: NONE

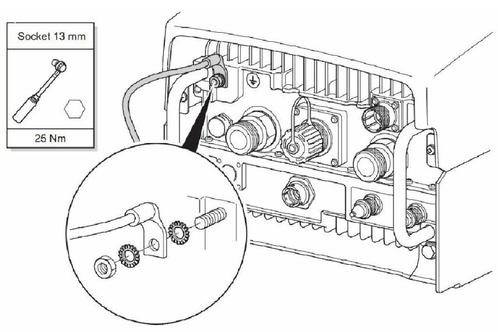

2 / E-1 TYPICAL RRU GROUNDING DETAIL

NOT TO SCALE

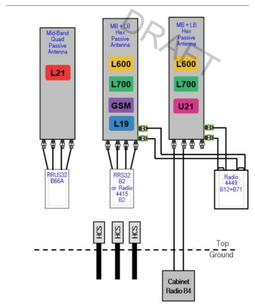

3 / E-1 PROPOSED PLUMBING DIAGRAM

SCALE: NONE

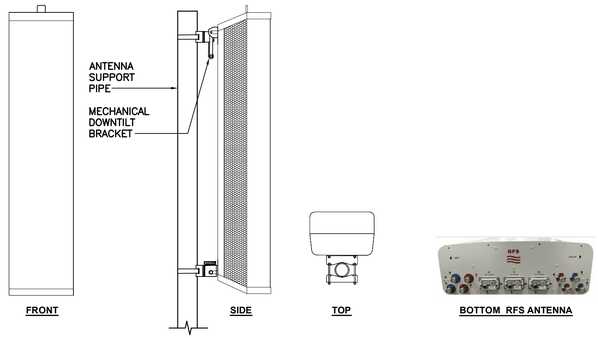

ALPHA/BETA/GAMMA ANTENNA		
EQUIPMENT	DIMENSIONS	WEIGHT
MAKE: RFS MODEL: APXVAARR24_43-U-NA20	95.9"L x 24"W x 8.7"D	153 LBS.

6 / E-1 PROPOSED ANTENNA DETAIL

SCALE: NONE

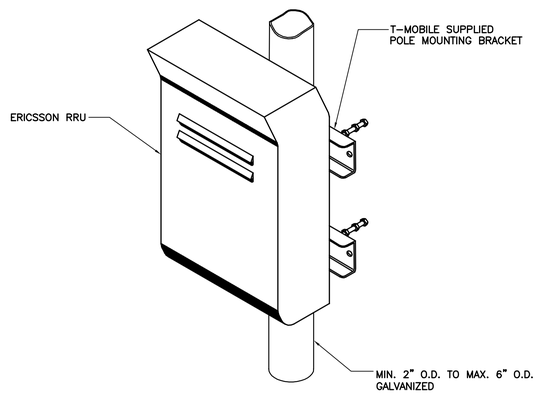

ISOMETRIC VIEW

NOTES:

1. T-MOBILE SHALL SUPPLY RRU, AND RRU POLE-MOUNTING BRACKET. CONTRACTOR SHALL SUPPLY POLE/PIPE AND INSTALL ALL MOUNTING HARDWARE INCLUDING ERICSSON RRU POLE-MOUNTING BRACKET. CONTRACTOR SHALL INSTALLS RRU AND MAKES CABLE TERMINATIONS.
2. NO PAINTING OF THE RRU OR SOLAR SHIELD IS ALLOWED.

4 / E-1 TYPICAL RRUS MOUNTING DETAILS

SCALE: NOT TO SCALE

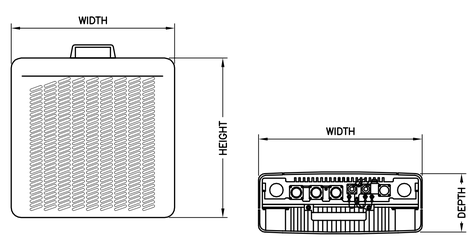

FRONT VIEW BOTTOM VIEW

RRH (REMOTE RADIO HEAD)		
EQUIPMENT	DIMENSIONS	WEIGHT
MAKE: ERICSSON MODEL: RRU 4449 B71+B12	14.9"H x 13.2"W x 9.3"D	±74 LBS
MAKE: ERICSSON MODEL: RRU 4415 B25	16.5"H x 13.4"W x 5.9"D	±46 LBS
MAKE: ERICSSON MODEL: RRU 4415 B66A	16.5"H x 13.4"W x 5.9"D	±46 LBS

5 / E-1 REMOTE RADIO HEAD (RRH) DETAIL (TYP)

SCALE: NOT TO SCALE

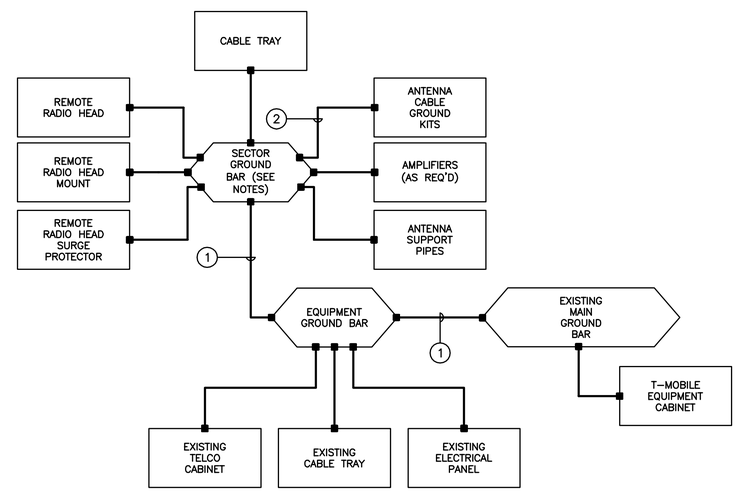

GROUNDING SCHEMATIC NOTES

1. #2 AWG
2. #6 AWG

GENERAL NOTES:

1. ALL SURGE SUPPRESSION EQUIPMENT SHALL BE BONDED TO GROUND PER MANUFACTURER'S SPECIFICATIONS
2. UNLESS OTHERWISE NOTED OR REQUIRED BY CODE, GROUND CONDUCTORS SHOWN SHALL BE #2 AWG (SOLID TINNED BCW – EXTERIOR; STRANDED GREEN INSULATED – INTERIOR).
3. ALL SECTOR GROUND BARS SHALL BE BONDED TOGETHER WITH #2 AWG SOLID TINNED BCW.
4. BOND ALL EQUIPMENT CABINETS AND BATTERY CABINETS TO GROUND PER MANUFACTURER'S SPECIFICATIONS.
5. COORDINATE ALL ROOF MOUNTED EQUIPMENT WITH OWNER.
6. ALL ROOF MOUNTED AMPLIFIERS AND ASSOCIATED EQUIPMENT SHALL BE BONDED TO THE SECTOR GROUND BAR PER MANUFACTURER'S SPECIFICATIONS.
7. ALL GROUNDING SHALL BE IN ACCORDANCE WITH NEC AND OWNER'S REQUIREMENTS.

7 / E-1 TYPICAL GROUNDING SCHEMATIC DETAIL

SCALE: NOT TO SCALE

REV.	DATE	DRAWN BY	CHK'D BY	DESCRIPTION
0	06/03/19	KAN/JR	CAG	CONSTRUCTION DRAWINGS– ISSUED FOR CONSTRUCTION

PROFESSIONAL ENGINEER SEAL

STATE OF CONNECTICUT · CHRISTOPHER A. GAMBARDELLA · 29217 · PROFESSIONAL ENGINEER

T-Mobile

Transcend Wireless

CENTEK engineering
Centered on Solutions™
(203) 488-0580
(203) 488-8587 Fax
63-2 North Branford Road
Branford, CT 06405
www.CentekEng.com

T-MOBILE NORTHEAST LLC
WIRELESS COMMUNICATIONS FACILITY
EAST LYME / RT 1_1
SITE ID: CT11330A
6 STONE RANCH RD
EAST LYME, CT 06333

DATE: 05/08/19
SCALE: AS NOTED
JOB NO. 19027.07

TYPICAL ELECTRICAL DETAILS

E-1

Sheet No. 6 of 7

ITEM PART NO.	DESCRIPTION	QTY. WEIGHT
1 SFQV01	SF-QV Arm Frame Weldment	1 59.92 LBS
2 SFQV02	SF-QV Transition Swivel Plate	2 9.20 LBS
3 SFQV03	Top SF-QV Mount Bracket	1 18.22 LBS
4 SFQV04	Lower SFQV Mount Bracket	1 18.75 LBS
5 MTC360613	SPLICE PLATE	8 2.04 LBS
6 SFQV11	Taper Plate Bushing	2 0.06 LBS
7 SFQV12	90 Deg Tower Bracket	2 5.31 LBS
8 SFQV13	SF-QV Back Clamp	2 7.51 LBS
9 SFQV14	60 Deg Tower Bracket	2 5.22 LBS
10 GUB-4240	1/2" X 2-1/2" X 4" GALV U-BOLT	11 0.56 LBS
11 SAB01	FORMED CLAMP	2 1.35 LBS
12 OS15034	3/4" X 1-1/2" OFFSET COLLAR	1 0.14 LBS
13 XA2020.01	CROSS OVER ANGLE	3 2.65 LBS
14 GB-05245	5/8" X 2-1/2" GALV BOLT KIT	6 0.30 LBS
15 GWF-05	5/8" GALV FLAT WASHER	34 0.06 LBS
16 GWL-05	5/8" GALV LOCK WASHER	16 0.03 LBS
17 GN-05	5/8" GALV HEX NUT	24 0.08 LBS
18 GB-04145	1/2" X 1-1/2" GALV BOLT KIT	32 0.13 LBS
19 GWF-04	1/2" GALV FLAT WASHER	20 0.03 LBS
20 GWL-04	1/2" GALV LOCK WASHER	4 0.01 LBS
21 GN-04	1/2" GALV HEX NUT	4 0.04 LBS
22 MT-379-8	1/2" X 8" GALV THREADED ROD	2 0.44 LBS
23 MT-382-16	5/8" X 16" GALV THREADED ROD	8 1.38 LBS
24 200GC	2" RMC COUPLING	1 1.57 LBS
25 SAB6301	Ø2-3/8" O.D. X 84" SCH 40 PIPE NPT 1 END	2 18.98 LBS
26 MTC360601	RIGHT FRAME WELDMENT	1 59.92 LBS
27 GB-04125	1/2" X 1-1/4" GALV BOLT KIT	1 0.12 LBS
28 GB-04265	1/2" X 2-3/4" GALV BOLT KIT	1 0.20 LBS
29 SFQVXX	SF-QV Face Angle (SEE TABLE)	4 24.99 LBS

* SEE TABLE*

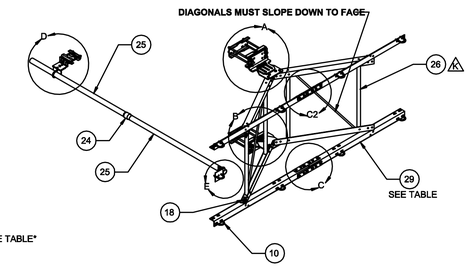

SF-QV-B SERIES TABLE

PART NUMBER	DESCRIPTION	SFQV36	SFQV35	SFQV34	SFQV33	WEIGHT
SF-QV7-B Quik	Vee Sector Frame, 7'-6" Face, Pipes ordered separately 4 - - -					372.85 LBS
SF-QV10-B Quik	Vee Sector Frame, 10'-6" Face, Pipes ordered separately - 4 - -					397.66 LBS
SF-QV12-B Quik	Vee Sector Frame, 12'-6" Face, Pipes ordered separately - - 4 -					416.59 LBS
SF-QV14-B Quik	Vee Sector Frame, 14'-6" Face, Pipes ordered separately - - - 4					436.08 LBS

NOTES:
1. ALL METRIC DIMENSIONS ARE IN BRACKETS.
2. DETAILS ON SHEET 3 - 5.
3. OVERALL DIMS ON SHEET 5.
4. ASSEMBLY STEPS ON SHEET 3.
5. FITS TOWER LEGS UP TO 8" OD, 8" ANGLE 60 , OR 6" ANGLE 90 .
6. USE TOWER BRACKETS SFQV12 FOR 90 LEGS AND SFQV14 FOR 60 LEGS.

These drawings and specifications are the proprietary property of CommScope Inc. and may be used only for the specific purpose authorized in writing by CommScope Inc.

ALL DIMENSIONS ARE IN INCHES U.O.S.
TOLERANCES UNLESS OTHERWISE SPECIFIED
X = ± .12 ANGLES ±2°
.XX = ± .06 FRACTIONS ±1/32
.XXX = ± .03
REMOVE BURRS AND BREAK EDGES .005
DO NOT SCALE THIS PRINT

DRAWN BY: MSM | SHEET: 2 of 7 | PART NUMBER: SF-QV-B SERIES
CHECKED BY: TP | SCALE: NTS | DESCRIPTION: Sector Frame Quick-V
DATE: 11/30/11 | DRAWING: A3RLA500,A529 | ASSEMBLY DRAWING
REVISION: K | FINISH: GALV A123
WEIGHT: SEE TABLE
ANDREW ⊘ U.S.A. WESTCHESTER, IL. 60154

1 E-2 **PROPOSED SECTOR MOUNT DETAIL**
SCALE: NOT TO SCALE

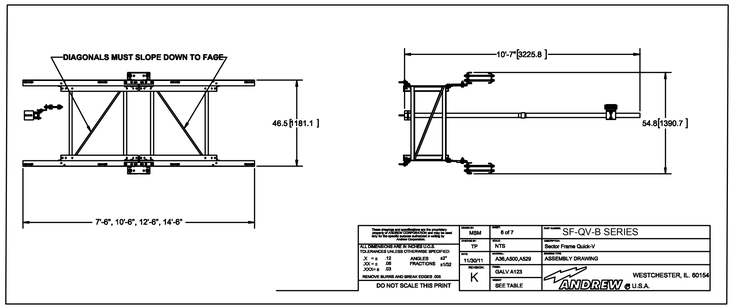

These drawings and specifications are the proprietary property of CommScope Inc. and may be used only for the specific purpose authorized in writing by CommScope Inc.
ALL DIMENSIONS ARE IN INCHES U.O.S.
TOLERANCES UNLESS OTHERWISE SPECIFIED
X = ± .12 ANGLES ±2°
.XX = ± .06 FRACTIONS ±1/32
.XXX = ± .03
REMOVE BURRS AND BREAK EDGES .005
DO NOT SCALE THIS PRINT
DRAWN BY: MSM | SHEET: 6 of 7 | PART NUMBER: SF-QV-B SERIES
CHECKED BY: TP | SCALE: NTS | DESCRIPTION: Sector Frame Quick-V
DATE: 11/30/11 | DRAWING: A3RLA500,A529 | ASSEMBLY DRAWING
REVISION: K | FINISH: GALV A123
WEIGHT: SEE TABLE
ANDREW ⊘ U.S.A. WESTCHESTER, IL. 60154

2 E-2 **PROPOSED SECTOR MOUNT DETAIL**
SCALE: NOT TO SCALE

RISER DIAGRAM NOTES

1. EXISTING T-MOBILE 100A DISTRIBUTION PANEL TO BE REMOVED AND REPLACED.
2. CONDUITS AND CONDUCTORS SERVING EXISTING RADIO EQUIPMENT CABINETS TO BE REMOVED.
3. CONDUITS AND CONDUCTORS FEEDING EXISTING 100A PANEL TO BE REMOVED.
4. (3) #3/0 AWG, (1) #6 AWG GROUND, 2 1/2" CONDUIT CONNECTED TO SOURCE PREVIOUSLY FEEDING REMOVED 100A PANEL. MAXIMUM CIRCUIT LENGTH OF 200FT. VERIFY LOCATION IN FIELD. COORDINATE ANY REQUIRED UPGRADES WITH BUILDING OWNER AND LOCAL UTILITY COMPANY.
5. NEW 200A, 240V, SINGLE PHASE, 30 POSITION, NEMA 3R PANEL WITH COPPER BUS, BOLT ON CIRCUIT BREAKERS AND 200A/2P MAIN CIRCUIT BREAKER.
6. (3) #1/0 AWG, (1) #6 AWG GROUND, 2" CONDUIT CONNECTED TO NEW 125A/2P CIRCUIT BREAKER AND ROUTED TO EXISTING T-MOBILE RADIO CABINET.
7. EXISTING T-MOBILE RADIO CABINET TO REMAIN.

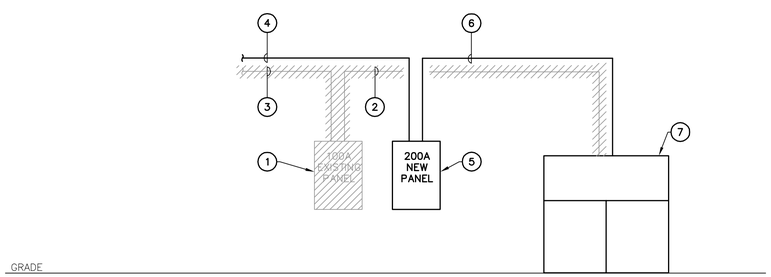

3 E-2 **ELECTRICAL POWER RISER DIAGRAM**
SCALE: NOT TO SCALE

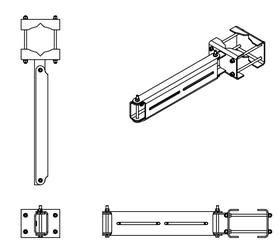

RRU DUAL SWIVEL MOUNT		
EQUIPMENT	DIMENSIONS	WEIGHT
MAKE: SITE PRO 1 PART NO.: RRUDSM	27.75"L x 6.5"W x 4.7"D	39.4 LBS.

4 E-2 **RRH DUAL SWIVEL MOUNT DETAIL**
SCALE: NOT TO SCALE

REV.	DATE	DRAWN BY	CHK'D BY	DESCRIPTION
0	06/03/19	KAN/JR	CAG	CONSTRUCTION DRAWINGS-- ISSUED FOR CONSTRUCTION

PROFESSIONAL ENGINEER SEAL

STATE OF CONNECTICUT · CRAIG A. GAUDET · 32021 · LICENSED PROFESSIONAL ENGINEER

T-Mobile · Transcend Wireless

CENTEK engineering
Centered on Solutions™
(203) 488-0580
(203) 488-8587 Fax
63-2 North Branford Road
Branford, CT 06405
www.CentekEng.com

T-MOBILE NORTHEAST LLC
WIRELESS COMMUNICATIONS FACILITY
EAST LYME / RT 1_1
SITE ID: CT11330A
6 STONE RANCH RD
EAST LYME, CT 06333

DATE: 05/08/19
SCALE: AS NOTED
JOB NO. 19027.07

TYPICAL ELECTRICAL DETAILS

E-2

Sheet No. 7 of 7

AECOM

Submitted to
Transcend Wireless
35 Griffin Road South
Bloomfield, CT 06002

Submitted by
AECOM
500 Enterprise Drive,
Suite 3B
Rocky Hill, CT 06067
May 14, 2019

DETAILED STRUCTURAL ANALYSIS AND EVALUATION OF AN EXISTING 140' SELF SUPPORTING LATTICE TOWER AND FOUNDATION FOR PROPOSED ANTENNA ARRANGEMENT

T-Mobile

T-Mobile Site Name: CT11330A
Site Name : East Lyme / Rt 1_1
Site Address: 6 Stone Ranch Road
East Lyme, Connecticut
CSP Tower # 83

60604314
TWM-018

TABLE OF CONTENTS

1. EXECUTIVE SUMMARY
2. INTRODUCTION
3. ANALYSIS METHODOLOGY AND LOADING CONDITIONS
4. FINDINGS AND EVALUATION
5. CONCLUSIONS AND RECOMMENDATIONS
6. DRAWINGS AND DATA
   - SEISMIC BASE SHEAR ANALYSIS
   - TNX TOWER INPUT / OUTPUT SUMMARY
   - TNX TOWER FEEDLINE DISTRIBUTION CHART
   - TNX TOWER FEEDLINE PLAN
   - TNX TOWER TILT, TWIST AND DEFLECTION
   - TNX TOWER DETAILED OUTPUT
   - ANCHOR BOLT ANALYSIS
   - FOUNDATION ANALYSIS
   - ANALYSIS UNDER TIA-222-F DESIGN CRITERIA (DESPP / CSP)
   - (REFERENCE) STRUCTURAL ANALYSIS REPORT – ANTENNA MOUNT ANALYSIS OF COMMSCOPE (SF-QV12-B) WITH PROPOSED RFDS

1. EXECUTIVE SUMMARY

This report summarizes the structural analysis of the existing 140' self-supporting lattice tower located at 6 Stone Ranch Road in East Lyme, Connecticut.

The structural analysis was conducted in accordance with the 2018 Connecticut State Building Code which includes the TIA-222-G[1] Standard, 2015 International Building Code, the 2018 Connecticut State Building Code Amendments, the AISC[2] Load Resistance Factor Design (LRFD), the ASCE 7[3] design Code, and the Connecticut State Police Requirements which include the TIA/EIA-222-F[4].

The antenna loading considered in the analysis consists of all the existing antennas, transmission lines and ancillary items as outlined in the Introduction Section of this report.

The proposed T-Mobile antenna upgrades are listed below:

Antenna and Mount	Carrier	Antenna Center Elevation
<u>Remove:</u> **(3) EMS RR90-17-00DP Panel Antennas** **(6) Generic TMA Units** **(6) 1-1/4" Coaxial Cables** **(3) Existing Mount Assemblies**	**T-Mobile (Existing)**	**@ 112'**
<u>Install:</u> **(3) RFS APXVAARR24_43-U-NA20 Panel Antennas** **(3) Ericsson Radio 4449 B71+B12 RRH Units** **(3) Ericsson Radio 4415 B25 RRH Units** **(3) Ericsson Radio 4415 B66A RRH Units** **(3) Ericsson 6x12 HCS Hybrid Cables (Analysis applied 4 Gage cables (AWG))** **(3) Commscope SF-QV12-B Quick-Vee Sector Antenna Mount Frames**	**T-Mobile (Proposed)**	**@ 112'**

The results of an initial analysis indicate that:

1. The existing steel tower structure IS considered structurally adequate for the proposed antenna loading with the wind classification specified herein.
2. The existing tower anchor bolts ARE considered structurally adequate for the proposed antenna loading with the wind classification specified herein.
3. The existing foundation IS considered structurally adequate for the proposed antenna loading with the wind classification specified herein.
4. The existing tower's sway (deflection) is 0.5206 degrees, and the existing tower's twist (rotation) is 0.1570. These figures combined ARE within the Connecticut State Police requirement of 0.75 degrees for combined twist (rotation) and sway (deflection) with the load classification specified herein.
5. The controlling structural capacity for all tower and foundation components for the proposed antenna loading is **<u>94.1%</u>**

1. TIA = Telecommunications Industry Association Structural Standard for Antenna Supporting Structures and Antennas (Version G)

2. AISC = American Institute of Steel Construction (14th Edition)

3. ASCE 7 = American Society of Civil Engineers Standard 7 (2010 Edition)

4. TIA/EIA = Telecommunications Industry Association Structural Standard for Antenna Supporting Structures and Antennas (Version F)

1. EXECUTIVE SUMMARY *(continued)*

The analysis results presented herewith are based upon tower modifications proposed by AECOM's tower modification report, project 60509756.25000 / PNS-625, signed and sealed on August 21, 2017. If the tower and foundation have not been modified to the specifications proposed by AECOM, please notify the engineer in writing immediately.

This analysis is based on:

1) The tower structure's theoretical capacity not including any assessment of the condition of the tower.
2) Tower geometry and structural member sizes utilized in the preparation of this report obtained from the manufacturers original design documents prepared by LeBlanc Communications Inc., File #4160733, signed and sealed October 14, 1996.
3) Previous structural analysis and reinforcement performed by URS Corporation on behalf of Northeast Utilities, project number NU1-048 / 36922425, signed and sealed July 9, 2013.
4) Tower Mapping and Inventory by D&K Nationwide Communications, Inc., dated March 21, 2016.
5) Proposed antenna inventory provided by Motorola / Connecticut State Police via email on August 16, 2016.
6) Updated existing antenna inventory provided by Motorola / Connecticut State Police via e-mail dated June 30, 2017.
7) Previous structural analysis and modification on behalf of Pyramid Network Services, project # 60509756.25000 / PNS-625, signed and sealed on August 21, 2017.
8) Proposed T-Mobile antenna inventory from Radio Frequency Data Sheet (RFDS), dated April 23, 2019, obtained via e-mail dated May 3, 2019.
9) Antenna and mount configuration as specified on the following page of this report.
10) Coaxial cable orientation as specified in Section 6 of this report.

This report is only valid as per the assumptions and data utilized in this report for antenna inventory, mounts and associated cables. The user of this report shall field verify the antenna, cabling, and mount configuration used, as well as the physical condition of the tower members, connections and foundations. Notify the engineer in writing immediately if any of the information in this report is found to be other than specified.

If you should have any questions, please contact Naish Artaiz at (860) 990-6767.

Sincerely,

AECOM,

STATE OF CONNECTICUT
RICHARD A. SAMBOR
NO. 9057
LICENSED
PROFESSIONAL ENGINEER

Richard A. Sambor, P.E.
Senior Structural Engineer
RAS/mcd

2. INTRODUCTION

The subject tower is located at 6 Stone Ranch Road in East Lyme, Connecticut. The structure is a 140' self-supporting lattice tower designed by LeBlanc Communications Inc.

The structural analysis was conducted in accordance with the following:

- TIA-222-G Standard for Standard for a wind velocity of range of 105 mph to 120 mph (3-second gust) and 50 mph (3-second gust) concurrent with 0.75" ice thickness, considered to increase in thickness with height
- 2015 International Building Code with 2018 Connecticut State Building Code Amendments for a wind speed of 112 mph (3-second gust)
- 2010 AISC Load Resistance Factor Design (LRFD)
- 2010 ASCE 7 Minimum Design Loads for Buildings and Other Structures for the ice thickness referenced in the TIA-222-G Standard
- Connecticut State Police Requirements for a wind velocity of 90 mph (fastest mile) and 90 mph (fastest mile) concurrent with 0.5" ice. Twist (rotation) and sway (deflection) were determined in accordance with Connecticut State Police Requirements for a wind velocity of 90 mph (fastest mile) concurrent with 0.5" ice, analyzed under the TIA/EIA-222-F design Standard.

The inventory together with the proposed T-Mobile antenna arrangement is summarized in the table below:

Antenna Type	***Carrier / CSP Ant #***	***Mount***	***Antenna Mounting Elevation***	***Cable***
(1) 6' Lightning rod on 15' pipe	D&K-27 (Tower)	Top of Tower	156'	-----
(1) Tower Light/Beacon	D&K-26 (existing)	Top of tower	140'	(1) 1/2" coaxial cable
(1) Sinclair SE419-SWBP2LDF(D00) Panel Antenna (Troop F – TX)	CSP (existing)	Mount on existing Arm	140'	(1) AVA7-50 Low-Density Foam coaxial cable
(1) Bird 432E-83I-01T TTA Unit (Troop F – TX/RX)	CSP (existing)	*See Above Mount*	140'	(1) 1/2" coaxial cable
(1) (inverted) Sinclair SC479-HF1LDF(D00I-E6085) Omni Antenna (Troop F – RX)	CSP (existing)	(2) SitePro1 PSA6 6' Side Arm with Stiff-Arms	140'	(1) 1/2" jumper cable from above TTA Unit
(1) (inverted) Sinclair SC479-HF1LDF(D00I-E6085) Omni Antenna (Troop F – Diversity RX)	CSP (existing)	*Shared with above Mount*	140'	(1) 1/2" jumper cable from above TTA Unit
(1) Amphenol WPA-70063-2CF-EDIN-0 Panel Antenna (Troop E – P25 (TX))	CSP (existing)	Mounted to 6' Pipe Mount on Tower Face	140'	(1) AVA7-50 Low Density Foam Coaxial Cable
(1) Bird 432E-83I-01T TTA Unit (Troop E – Diversity)	CSP (existing)	Attached to Tower Face	140'	(1) AVA7-50 Low Density Foam Coaxial Cable (1) 1/2" Coaxial Cable
(1) Amphenol WPA-70063-2CF-EDIN-0 Panel Antenna (Troop E – P25 (RX))	CSP (existing)	*Shared with above 6' Pipe Mount*	140'	(1) 1/2" Jumper Cable connected with TTA (listed above)
(1) Amphenol WPA-70063-2CF-EDIN-0 Panel Antenna (Troop E – P25 Diversity (RX))	CSP (existing)	Mounted to 6' Pipe Mount on Tower Face	140'	(1) 1/2" Jumper Cable connected with TTA (listed above)

Antenna Type	*Carrier / CSP Ant #*	*Mount*	*Antenna Mounting Elevation*	*Cable*
(1) Commscope PAR6-59W-PXA/A 6' Microwave Dish w/ Radome	CSP (existing)	(1) 6' Pipe Mounted to Tower Leg	134'	(1) EW 63
(1) 6' Dish with Radome	D&K-23 (existing)	Pipe Mounted to Tower Leg	134.5'	(1) WEP65
(1) 6' Dish with Radome	D&K-22 (existing)	Pipe Mounted to Tower Leg	132.5'	(1) WEP65
-----	D&K-19 (existing)	6' Side Arm Mount	125'	------
-----	D&K-15 (existing)	(2) 8' Side Arm Mounts	118'	------
(1) (inverted) Sinclair SC479-HF1LDF Omni Antenna	D&K-14 (existing)	(2) 8' Side Arm Mounts	115'	(1) 1-5/8" coaxial cable
(3) RFS APXVAARR24_43-U-NA20 Panel Antennas (3) Ericsson Radio 4449 B71+B12 RRH Units (3) Ericsson Radio 4415 B25 RRH Units (3) Ericsson Radio 4415 B66A RRH Units	**T-Mobile (Proposed)**	**(3) Commscope SF-QV12-B Quick-Vee Sector Antenna Mount Frames**	**112'**	**(3) Ericsson 6x12 HCS Hybrid Cables (Analysis applied 4 Gage cables (AWG))**
(1) (inverted) Decibel DB-264 2-bay Dipole Antenna	D&K-10 FBI-12 (existing)	(2) 8' Side Arm Mounts	102'	(1) 1-1/4" coax cable
(1) Telewave UHF-6 4-Bay Dipole Antenna	D&K-9 CSP-13 (existing)	Mounted to Tower Leg	101'	(1) 1-1/4" coax cable
(1) Decibel DB586-Y Omni Antenna	D&K-8 NEU-38 (existing)	*Shared with below (D&K-7) mount*	103'	(1) 1/2" jumper cable from TTA Unit (D&K-7)
(1) Bird 432-94C TTA Control Box	D&K-7 NEU-40 (existing)	6' Side Arm Mount	102'	(2) 7/8" coaxial cables
(1) (inverted) Decibel DB586-Y Omni Antenna	D&K-6 NEU-39 (existing)	*Shared with above (D&K-7) mount*	94'	(1) 1/2" jumper cable from TTA unit (D&K-7)
(1) Andrew DB-438 Yagi Antenna	D&K-5 FBI-10 (existing)	*Shared with below (D&K-4) mount*	83'	(1) 7/8" coaxial cable
(1) 8' Dipole Antenna DB222-A	D&K-4 VSC-31 (existing)	4' Side Arm Mount	80'	(1) 7/8" coaxial cable

Antenna Type	*Carrier / CSP Ant #*	*Mount*	*Antenna Mounting Elevation*	*Cable*
(1) Scala PR-950 3' Wide Half-Parabolic Grid Dish	D&K-3 VS-16 (existing)	Mounted to Tower Leg	79'	(1) 7/8" coaxial cable
(1) Comprod 531-70 Dipole Antenna	D&K-2 DOT-19 (existing)	5' Side arm Pipes Mounted to Leg	65'	(1) 7/8" coaxial cable
(1) Andrew DB-438 Yagi Antenna	D&K-1 FBI-11 (existing)	Mounted to Tower Leg	60'	(1) 7/8" coaxial cable

NOTES: Antenna ID Numbering and elevations obtained from Tower Mapping and Existing inventory via tower climb performed by D&K Nationwide Communications, Inc. on March 21, 2016.

"*" indicates future decommissioning of CSP antennas

This structural analysis of the communications tower was performed by AECOM for T-Mobile. The purpose of this analysis was to investigate the structural integrity of the existing tower and foundation for existing and proposed antenna loads. This analysis was conducted to evaluate stress on the tower and the effect forces to the foundation of the tower resulting from existing and proposed antenna arrangements.

3. ANALYSIS METHODOLOGY AND LOADING CONDITIONS

The structural analysis was done in accordance with, the TIA-222-G–Structural Standard for Antenna Towers and Antenna Supporting Structures and Antennas, the 2015 International Building Code with 2018 Connecticut State Building Code Amendments and the American Institute of Steel Construction (AISC) Manual of Steel Construction – Load Resistance Factor Design (LRFD)

The structural analysis was conducted using TNX Tower version 8.0.5.0 and used the following conditions for this tower review (following the TIA/EIA-222-G Standard):

- Structure Class 3 – (Essential Communications)
    - NOTE: ASCE 7 and CT State Building Code Applied Risk Category 4 for design wind loads (see below)
- Topographic Category 3 – (Tower location on top of hill – rolling wind conditions considered)
    - Crest Height used for analysis (approximate elevations listed below):
        - Tower Base Elevation = 280'
        - High Point (2 mile Radius) = 351' (Ref. Pond Hill)
        - Low Point (2 mile Radius) = 100' (Ref. Landing Strip (Airplane))
        - "H" = (Avg. of High/Low) – Base Elevation = (351'+100')/2 – 280' = <u>54 Feet</u>
- Exposure Class C – (Open Terrain with scattered obstructions)
- Load Conditions:
    - Two load conditions were evaluated as shown which were compared to design stresses according to AISC and TIA/EIA-222-G Standard.

Basic Wind Speed:

- TIA-222-G:
    - New London County (Wind Speed Range): V = 105 mph - 120 mph (3-second gust) [Annex of TIA-222-G 2006]
- IBC 2015 w/ 2018 CT State Building Code Amendment:
    - (2015) IBC Section 1609.1.1 – Determination of Wind Loads – Exception 5 "Designs using TIA-222" applies for determination of Design Wind Load obtained as "V.ult" are to be converted to "V.asd" when applying the TIA-222-G design Standard (under Section 1609.3) for Basic Wind Speed.
    - (2018) CT State Building Code Amendment to the IBC Section 1609.3 wind loads are obtained from Appendix N of the State Building Code.
        - V.asd = 112 mph (3-Second Gust) Wind Design Parameter for the Town of East Lyme, Connecticut for Risk Category four (IV) for essential communications (Connecticut State Police).

LOAD CONDITION 1 = 112 MPH (3-SECOND GUST) WIND LOAD (WITHOUT ICE) + TOWER DEAD LOAD
Load Condition 2 = 50 mph (3-second gust) Wind Load (with ice) + Ice Load + Tower Dead Load

Ice thickness used for this analysis is **0.75 inch** (assumed to start at the base of the tower) and is considered to increase in thickness with height. The initial ice thickness for design is referenced in the Annex of TIA-222-G and follows the same design criteria as the ASCE 7 Standard.

The load condition below implements the design requirements of the Connecticut State Police for the tower structure's deflection limits with the allowable deflection limit of the combination of the tower's sway (deflection) and twist (rotation) under the TIA/EIA-222-F design Standard. This design limit required the design combined value of sway (deflection) and twist (rotation) to be under 0.75 degrees following the TIA/EIA-222-F design Standard.

3. ANALYSIS METHODOLOGY AND LOADING CONDITIONS (cont.)

Load Condition 3 = 90 mph (fastest mile) Wind Load (with Ice) + Ice Load + Dead Load

Seismic event consideration factors/values for design:

- S.s = 0.164 (2018 CT State Building Code – Location Specific Value)
- S.1 = 0.059 (2018 CT State Building Code – Location Specific Value)
- Site Classification = "D"
- Seismic Design Category = "A" – (2015 International Building Code)
- F.a = 1.6 (Obtained from TIA-222-G Table 2-12 Considering above conditions)
- F.v = 2.4 (Obtained from TIA-222-G Table 2-13 Considering above conditions)

Strength Limit State Load Combinations (TIA-222-G Section 2.3.2):

The structural analysis herein has considered the following load combinations within the analysis:

1. ***1.2 Dead Load Tower structure + 1.0 Dead Load Guy Assemblies + 1.6 Wind load without ice***
2. 1.2 Dead Load Tower structure + 1.0 Dead Load Guy Assemblies + 1.0 Dead weight of ice due to factored ice thickness + 1.0 Concurrent wind load with factored ice thickness + 1.0 Load effects due to temperature
3. 1.2 Dead Load Tower structure + 1.0 Dead Load Guy Assemblies + 1.0 Earthquake Load

NOTE 1: The above **bolded** load combination is considered to create the governing design loads per the results of the analysis.

NOTE 2: The above "Dead Load Guy Assemblies" are not considered as part of the analysis and are considered as a value of zero.

NOTE 3: The "Load effects due to temperature" do not apply for structures that are self-supporting (from the TIA-222-G Standard)

4. FINDINGS AND EVALUATION

The combined axial and bending stresses on the tower structure were evaluated to compare with the strength design in accordance with AISC (LRFD). The calculated stresses for the tower structure, anchor bolts and foundation are within the required design strength under the proposed configuration and loading (stated herein). Detailed analysis calculations for the proposed load condition are provided in Section 6 of this report.

The tower sway (deflection) is 0.5206 degrees and the tower twist (rotation) is 0.1570 degrees. These figures ARE NOT within the Connecticut State Police specification of combined 0.75 degrees for sway (deflection) and twist (rotation).

Tower Base Reactions (TIA-222-G):

Description	Current (TIA-222-G)
Pier Compression (kips)	393
Pier Uplift (kips)	346
Overall Overturning (kip-ft)	5215
Overall Shear (kips)	68.6
Shear per Leg (kips)	42

Tower Component Stress vs. Capacity Summary:

Component / (Section No.)	Controlling Component/ Elevation	Stress (% capacity)	Pass/Fail	Comments:
Leg (T7)		73.1 %	**Pass**	
Diagonal (T7)	L3-1/2x3-1/2x3/8" / 0' – 20'	94.1 %	**Pass**	Bolt Shear @ Connection
Secondary Horizontal (T7)	L2 1/2x2 1/2x1/4 / 0-20'	20.5 %	**Pass**	
Top Girt (T3)	L2x2x1/4 / 120'-140'	12.2 %	**Pass**	
Connection Bolt (T2)	(1) 5/8" Dia. A325X Bolt / 100'-120' (Diagonal)	94.1 %	**Pass**	Shear Capacity

Foundation Summary:

Component	Required	Computed	% Capacity	Pass/Fail
Tower Anchor Rod Capacity (TIA-222-G – 4.9.9)	Ratio < 1.0	0.77	77 %	**Pass**
Overturning Moment Factor of Safety TIA-222-G Conditions	Resist OT * (0.75) Reduction Factor (TIA-222-G – Section 9.4.1) 7923 Kip*ft	5264.5 kip*ft	66.4 %	**Pass**
Ultimate Soil Bearing Pressure (TIA-222-G Conditions)	7.200 ksf max	3.3403 ksf max	46.4 %	**Pass**

Structure Rating (Maximum from all components) =	94.1 %	**Pass**

The analysis results presented herewith are based upon tower modifications proposed by AECOM's tower modification report, project 60509756.25000 / PNS-625, signed and sealed on August 21, 2017. If the tower and foundation have not been modified to the specifications proposed by AECOM, please notify the engineer in writing immediately.

4. FINDINGS AND EVALUATION (cont.)

Maximum Deformations – Proposed Condition

TIA-222-G Section 2.8.2 - Limit State Deformations

1. A rotation of 4 degrees about the vertical axis (twist) or any horizontal axis (sway) of the structure
2. A horizontal displacement (in feet) of 3% of the height of the structure.

Load Case Description	Current		Allowable	
	Sway (degree)	Displacement (Feet)	Sway (degree)	Displacement (Feet)
Service Wind Load	0.0987	0.135	4.0	4.20

Tower Twist & Sway at Top (Connecticut State Police Requirements – TIA/EIA-222-F):

(After removal of previously indicated Decommissioned CSP antennas, project PNS-625)

Description	Current	Total	Allowable
Tower Twist (degrees)	0.1570	0.6776	0.750
Tower Sway (degrees)	0.5206		

5. CONCLUSIONS

The results of an initial analysis indicate that:

1. The existing steel tower structure IS considered structurally adequate for the proposed antenna loading with the wind classification specified herein.
2. The existing tower anchor bolts ARE considered structurally adequate for the proposed antenna loading with the wind classification specified herein.
3. The existing foundation IS considered structurally adequate for the proposed antenna loading with the wind classification specified herein.
4. The existing tower's sway (deflection) is 0.5206 degrees, and the existing tower's twist (rotation) is 0.1570. These figures combined ARE within the Connecticut State Police requirement of 0.75 degrees for combined twist (rotation) and sway (deflection) with the load classification specified herein.
5. The controlling structural capacity for all tower and foundation components for the proposed antenna loading is **94.1%**

The analysis results presented herewith are based upon tower modifications proposed by AECOM's tower modification report, project 60509756.25000 / PNS-625, signed and sealed on August 21, 2017. If the tower and foundation have not been modified to the specifications proposed by AECOM, please notify the engineer in writing immediately.

Limitations/Assumptions:

This report is based on the following:

1. Tower inventory as listed in this report.
2. Tower is properly installed and maintained.
3. All members are as specified in the original design documents and are in good condition.
4. All required members are in place.
5. All bolts are in place and are properly tightened.
6. Tower is in plumb condition.
7. All member protective coatings are in good condition.
8. All tower members were properly designed, detailed, fabricated, and installed and have been properly maintained since erection.
9. Foundations are in good condition without defects and were properly constructed to support original design loads as specified in the original design documents.

AECOM is not responsible for any modifications completed prior to or hereafter in which AECOM is not or was not directly involved. Modifications include but are not limited to:

A. Adding antennas
B. Removing/replacing antennas
C. Adding coaxial cables

AECOM hereby states that this document represents the entire report and that it assumes no liability for any factual changes that may occur after the date of this report. All representations, recommendations, and conclusions are based upon information contained and set forth herein. If you are aware of any information which conflicts with that which is contained herein, or you are aware of any defects arising from original design, material, fabrication, or erection deficiencies, you should disregard this report and immediately contact AECOM. AECOM disclaims all liability for any representation, recommendation, or conclusion not expressly stated herein.

Ongoing and Periodic Inspection and Maintenance:

After the Contractor has successfully completed the installation and the work has been accepted, the owner will be responsible for the ongoing and periodic inspection and maintenance of the tower.

The tower owner shall refer to TIA-222-G Section 14.2 for recommendations for maintenance and inspection. The frequency of the inspection and maintenance intervals is to be determined by the owner based upon actual site and environmental conditions. It is recommended that a complete and thorough inspection of the entire tower structural system be performed at least yearly and more frequently as conditions warrant. It is also recommended that the structure be inspected after severe wind and/or ice storms or other extreme loading conditions.

6.) DRAWINGS AND DATA

SEISMIC BASE SHEAR ANALYSIS

AECOM

Seismic (Vs) Base Shear Implementing ANSI/TIA–222-G, IBC 2015 & Connecticut State Building Code of 2018

Calculation of Seismic Base Shear Implementing ANSI/TIA-222-G, IBC 2015 & & CT State Building Code 2018.

Location: East Lyme, CT -Site Class "D"

$S_{DS} = \frac{2}{3} F_A S_S$, where $S_S = 0.164$ and $F_A = 1.6$ $S_{DS} = \frac{2}{3} F_A S_S = \frac{2}{3} * 1.6 * 0.164 = 0.1749$

$S_{D1} = \frac{2}{3} F_V S_1$, where $S_1 = 0.059$ and $F_V = 2.4$ $S_{D1} = \frac{2}{3} F_V S_1 = \frac{2}{3} * 2.4 * 0.059 = 0.0944$

TIA-222-G SECTION 2.7 EARTHQUAKE LOADS (PROCEDURES):

1. Importance Factor "I" (tables 2-3 TIA-222-G) = 1.5 (Structure Class 3)

ANSI/TIA-222-G 2.7.7.1 (TOTAL BASE SEISMIC SHEAR (Vs)

W=DL TOWER	=	34.558	Kips	
W=Antennas/Mounts	=	11.555	Kips	
W=Cables	=	5.090	Kips	
		51.203	Kip	= WT Total = "W"

$$V_s = \frac{S_{DS} * W * I}{R} = \frac{0.1749 * 51.203 kips * 1.5}{3.0} = 4.4777 \ kips,$$ where R = 3.0 for Lattice Tower

$$V_{S.min} = \frac{0.5 * S_{D1} * W * I}{R} = \frac{0.5 * 0.0944 * 51.203 kips * 1.5}{3.0} = 1.2084 \ kips$$

*By visual inspection, the above "Base Shear" value when considering the following Load Combination is less that the base shear of wind on structure.

$1.2 * DL + 1.0\,E < 1.2\,DL + 1.6\,W$, (72.0 Kips), therefore seismic effect on structure <u>Does NOT control Design.</u>

TNX TOWER INPUT / OUTPUT SUMMARY

Section	T1	T2	T3	T4	T5	T6	T7
Legs	SR 2	SR 2 3/4	3 SR w/ (4) 2"x0.75" Bars	3 1/4 SR w/ (4) 2"x0.75" Bars	3 1/2 SR w/ (4) 2"x0.75" Bars	3 3/4 SR w/ (4) 2"x0.75" Bars	3 3/4 SR w/ (4) 2"x0.75" Bars
Leg Grade	A572-50	A572-50	A572-50	A572-50	A572-50	A572-50	A572-50
Diagonals	L2x2x1/4	L2x2x5/16	L2x2x1/4	L2x2x5/16	L2 1/2x2 1/2x1/4	L3x3x5/16	L3 1/2x3 1/2x3/8
Diagonal Grade	A36	A529-50	A36	A529-50	A36	A529-50	A529-50
Top Girts	L2x2x1/4	N.A.	L2x2x1/4	N.A.	N.A.	L2 1/2x2 1/2x1/4	
Sec. Horizontals			N.A.				
Face Width (ft)	6.25			8.1728	10.0956	12.0184	13.9412
# Panels @ (ft)			20 @ 5			4 @ 10	
Weight (lb)	1285.0	1928.3	3383.5	3869.6	4338.0	4970.7	5630.8

Total Weight (lb): 25405.8

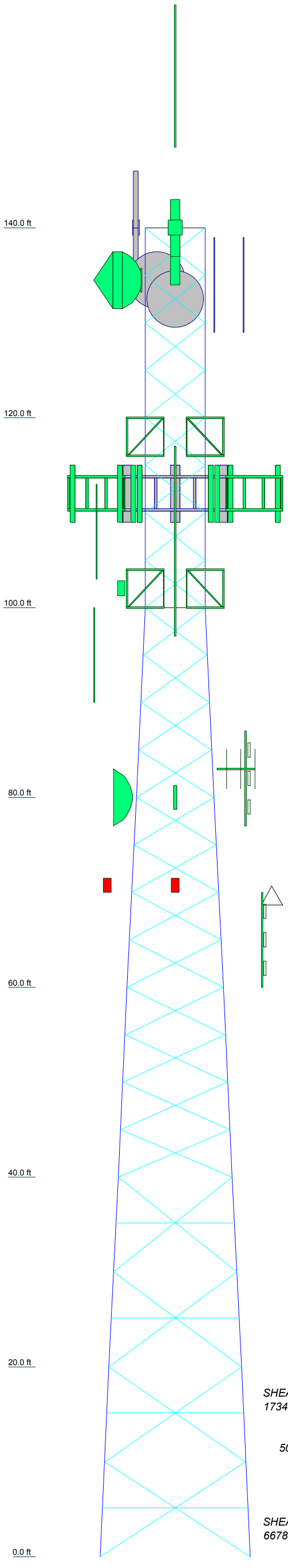

DESIGNED APPURTENANCE LOADING

TYPE	ELEVATION
Lightning Rod 1"x10' (DNK-27)	156
Flash Beacon Lighting (DNK-26)	140
WPA-70063-2CF Panel Antenna (Tr. E P25 TX)	140
432E-83I-01T TTA Unit (Tr. E P25 TX/RX)	140
WPA-70063-2CF Panel Antenna (Tr. E P25 RX)	140
6' Side-Arm (Tr. E P25 Antenna Mount)	140
WPA-70063-2CF Panel Antenna (Tr. E P25 (Diversity) RX)	140
SE419-SWBP2LDF(D00) Panel (Tr. F P25 TX)	140
432E-83I-01T TTA Unit (Tr. F P25 TX/RX)	140
(2) 6' Side-Arm (PSA6 - SitePro1) (Tr. F P25 Antenna Mount)	140
SC479-HF1LDF (D00I-E6085) (Tr. F P25 Antenna)	140 - 128
SC479-HF1LDF (D00I-E6085) (Tr. F P25 (Diversity) RX)	140 - 128
6'x4.5" OD Pipe Mount (Tr. E P25)	140
6'x4.5" OD Pipe Mount (Tr. E (Diversity) P25)	140
2'6"x4" Pipe Mount (DNK-23)	134.5
6' Dish w/ Radome (PA6-65) (DNK-23)	134.5
Commscope PAR6-59W-PXA/A (CSP)	134.5
6'x4.5" OD Pipe Mount (CSP - Dish)	134
2'6"x4" Pipe Mount (DNK-22)	132.5
6' Dish w/ Radome (PA6-65) (DNK-22)	132.5
6' Side-Arm (DNK-19)	125
8' Side Arm (DNK-15)	118
8' Side Arm (DNK-14)	118
8' Side Arm (DNK-14)	118
8' Side Arm (DNK-15)	118
SC479-HF1LDF (inverted) (DNK-14)	115 - 99
DB586-Y (DNK-8)	113 - 103
Commscope SF-QV12-B Mount Frame (T-Mobile - Proposed)	112
Commscope SF-QV12-B Mount Frame (T-Mobile - Proposed)	112
Commscope SF-QV12-B Mount Frame (T-Mobile - Proposed)	112
RFS APXVAARR24_43-U-NA20 Panel Antenna (T-Mobile - Proposed)	112
RFS APXVAARR24_43-U-NA20 Panel Antenna (T-Mobile - Proposed)	112

TYPE	ELEVATION
RFS APXVAARR24_43-U-NA20 Panel Antenna (T-Mobile - Proposed)	112
Ericsson 4449 B71 + B12 Radio Unit (T-Mobile - Proposed)	112
Ericsson 4449 B71 + B12 Radio Unit (T-Mobile - Proposed)	112
Ericsson 4449 B71 + B12 Radio Unit (T-Mobile - Proposed)	112
Ericsson Radio 4415 B25 RRH Unit (T-Mobile - Proposed)	112
Ericsson Radio 4415 B25 RRH Unit (T-Mobile - Proposed)	112
Ericsson Radio 4415 B25 RRH Unit (T-Mobile - Proposed)	112
Ericsson Radio 4415 B66A RRH (T-Mobile - Proposed)	112
Ericsson Radio 4415 B66A RRH (T-Mobile - Proposed)	112
Ericsson Radio 4415 B66A RRH (T-Mobile - Proposed)	112
DB224-A (DNK-9)	111 - 101
6' Side Mount Standoff (DNK-6)	102
432E-83I-01T TTA Unit (DNK-7)	102
8' Side Arm (DNK-10)	102
DB222-A (inverted) (DNK-10)	102 - 92
8' Side Arm (DNK-10)	102
DB586-Y (inverted) (DNK-6)	100 - 90
DB438 (DNK-5)	83
DB222-A (DNK-4)	82
4' Side Mount Standoff (DNK-4)	81
2'6"x4" Pipe Mount (DNK-3)	80
PR-950 (DNK-3)	80
L-810 Obstruction Lighting (1) (Tower)	70
L-810 Obstruction Lighting (1) (Tower)	70
531-70 Dipole (DNK-2)	69 - 61
5' Side-Arm (DNK-2)	65
DB438 (DNK-1)	60

MATERIAL STRENGTH

GRADE	Fy	Fu	GRADE	Fy	Fu
A572-50	50 ksi	65 ksi	A529-50	50 ksi	65 ksi
A36	36 ksi	58 ksi			

TOWER DESIGN NOTES

1. Tower designed for Exposure C to the TIA-222-G Standard.
2. Tower designed for a 105 mph basic wind in accordance with the TIA-222-G Standard.
3. Tower is also designed for a 50 mph basic wind with 0.75 in ice. Ice is considered to increase in thickness with height.
4. Deflections are based upon a 60 mph wind.
5. Tower Structure Class III.
6. Topographic Category 3 with Crest Height of 54.00 ft
7. Listed elevations are from DNK Tower Climb and are identified as Centerline of antenna/appurtenance
8. Base Elevation (appx) 280'
9. Hi Point = 351' (Pond Hill)
10. Low Point = 100' Landing Strip (Airport)
11. H = (351+100)/2 - 280 (abs) = 54 feet
12. TOWER RATING: 94.1%

ALL REACTIONS ARE FACTORED

MAX. CORNER REACTIONS AT BASE:
DOWN: 374835 lb
SHEAR: 40326 lb

UPLIFT: -327699 lb
SHEAR: 34934 lb

AXIAL
110023 lb

SHEAR 17345 lb — *MOMENT 1363 kip-ft*

TORQUE 13 kip-ft
50 mph WIND - 0.7500 in ICE

AXIAL
40690 lb

SHEAR 66783 lb — *MOMENT 4964 kip-ft*

TORQUE 31 kip-ft
REACTIONS - 105 mph WIND

AECOM
500 Enterprise Drive, Suite 3B
Rocky Hill, CT
Phone: 860-529-8882
FAX: 860-529-3991

Job: **140' Lattice Tower - CSP #83**			
Project: **East Lyme, Connecticut / S. Analysis**			
Client: Transcend Wireless / T-Mobile / TWM-018	Drawn by: MCD	App'd:	
Code: TIA-222-G	Date: 05/14/19	Scale: NTS	
Path: P:\Projects\Telcom\StructuralsByLocation\Connecticut\EastLymeCSP#83\10_60604314_TWM-018\TIA-G\TWM-018_East Lyme_CSP.eri		Dwg No. E-1	

MATERIAL STRENGTH

GRADE	Fy	Fu	GRADE	Fy	Fu
A572-50	50 ksi	65 ksi	A529-50	50 ksi	65 ksi
A36	36 ksi	58 ksi			

TOWER DESIGN NOTES

1. Tower designed for Exposure C to the TIA-222-G Standard.
2. Tower designed for a 105 mph basic wind in accordance with the TIA-222-G Standard.
3. Tower is also designed for a 50 mph basic wind with 0.75 in ice. Ice is considered to increase in thickness with height.
4. Deflections are based upon a 60 mph wind.
5. Tower Structure Class III.
6. Topographic Category 3 with Crest Height of 54.00 ft
7. Listed elevations are from DNK Tower Climb and are identified as Centerline of antenna/appurtenance
8. Base Elevation (appx) 280'
9. Hi Point = 351' (Pond Hill)
10. Low Point = 100' Landing Strip (Airport)
11. H = (351+100)/2 - 280 (abs) = 54 feet
12. TOWER RATING: 94.1%

Section	T1	T2	T3	T4	T5	T6	T7
Legs	SR 2	SR 2 3/4	3 SR w/ (4) 2"x0.75" Bars	3 1/4 SR w/ (4) 2"x0.75" Bars	3 1/2 SR w/ (4) 2"x0.75" Bars	(4) 2"x0.75" Bars	3 3/4 SR w/ (4) 2"x0.75" Bars
Leg Grade	A572-50						
Diagonals	L2x2x1/4	L2x2x5/16	L2x2x1/4	L2x2x5/16	L2 1/2x2 1/2x1/4	L3x3x5/16	L3 1/2x3 1/2x3/8
Diagonal Grade	A36	A529-50	A36	A529-50	A36	A529-50	
Top Girts	L2x2x1/4	N.A.	L2x2x1/4	N.A.			
Sec. Horizontals	N.A.					L2 1/2x2 1/2x1/4	
Face Width (ft) 15.864	6.25			8.1728	10.0956	12.0184	13.9412
# Panels @ (ft)	20 @ 5					4 @ 10	
Weight (lb) 25405.8	1285.0	1928.3	3383.5	3869.6	4338.0	4970.7	5630.8

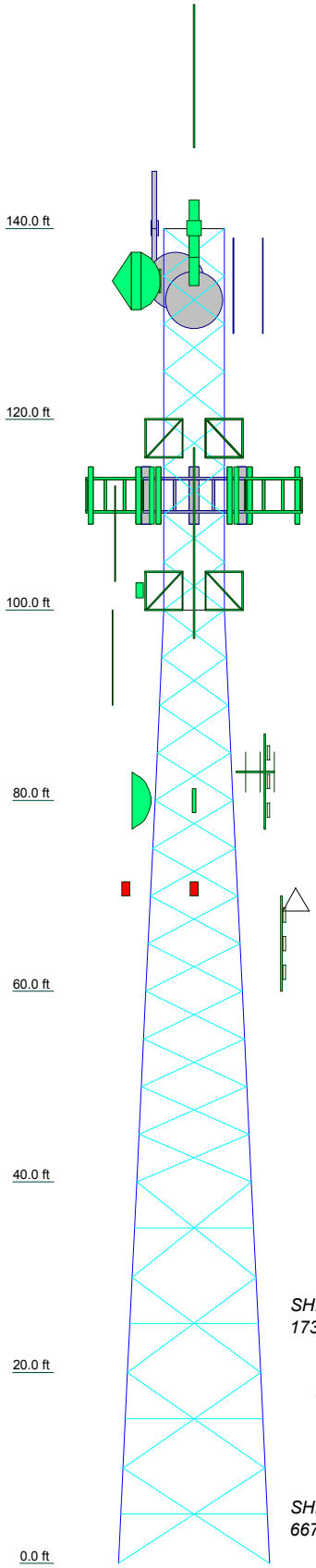

ALL REACTIONS ARE FACTORED

MAX. CORNER REACTIONS AT BASE:
DOWN: 374835 lb
SHEAR: 40326 lb

UPLIFT: -327699 lb
SHEAR: 34934 lb

AXIAL 110023 lb
SHEAR 17345 lb
MOMENT 1363 kip-ft
TORQUE 13 kip-ft
50 mph WIND - 0.7500 in ICE

AXIAL 40690 lb
SHEAR 66783 lb
MOMENT 4964 kip-ft
TORQUE 31 kip-ft
REACTIONS - 105 mph WIND

AECOM
500 Enterprise Drive, Suite 3B
Rocky Hill, CT
Phone: 860-529-8882
FAX: 860-529-3991

Job: **140' Lattice Tower - CSP #83**			
Project: ***East Lyme, Connecticut / S. Analysis***			
Client: Transcend Wireless / T-Mobile / TWM-018	Drawn by: MCD	App'd:	
Code: TIA-222-G	Date: 05/14/19	Scale: NTS	
Path: P:\Projects\Telcom\StructuralsByLocation\Connecticut\EastLymeCSP#83\10_60604314_TWM-018\TIA-G\TWM-018_East Lyme_CSP.eri		Dwg No. E-1	

TNX TOWER FEEDLINE DISTRIBUTION

Feed Line Distribution Chart
0' - 140'

Round | Flat | App In Face | App Out Face | Truss Leg

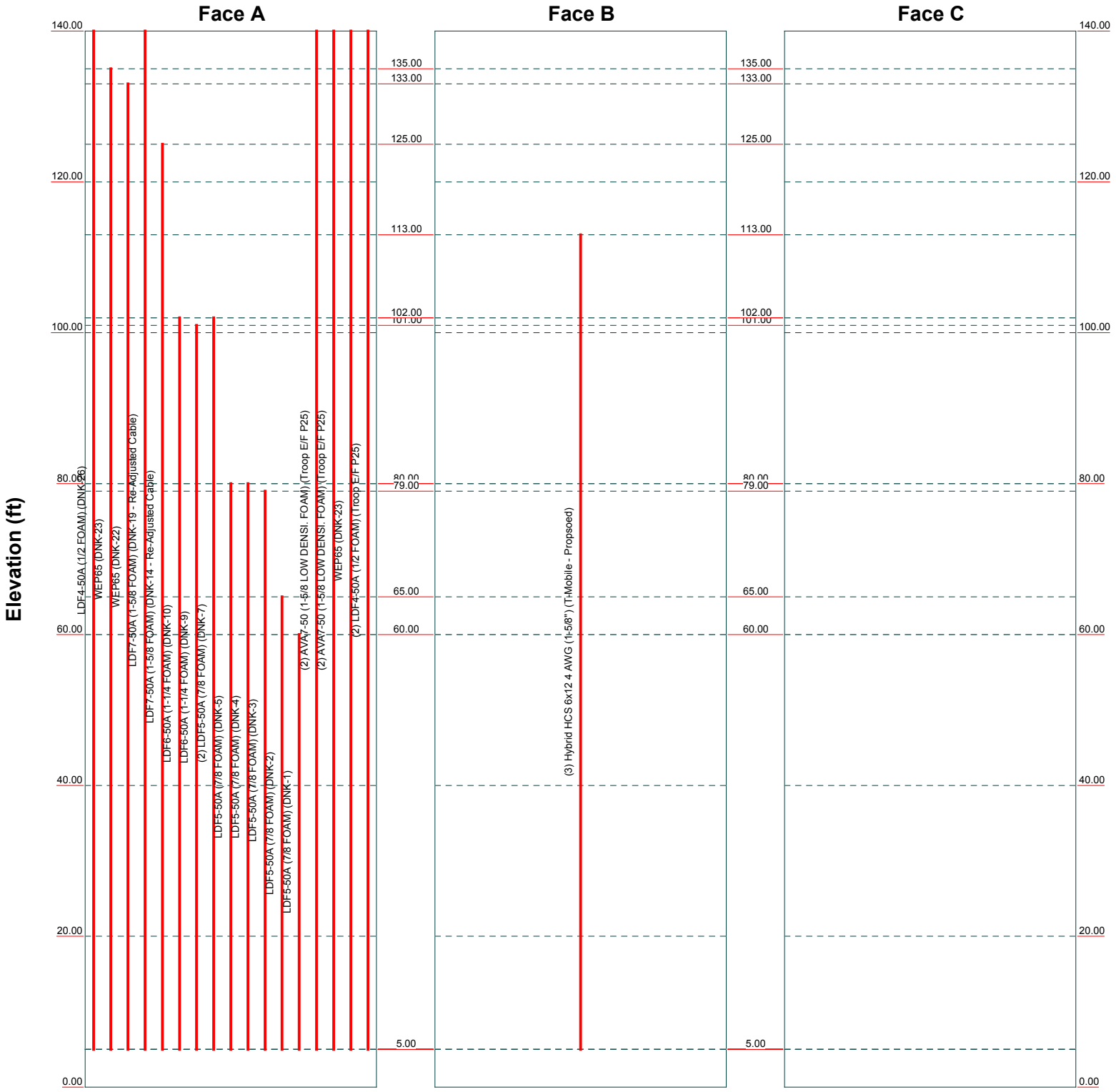

AECOM
500 Enterprise Drive, Suite 3B
Rocky Hill, CT
Phone: 860-529-8882
FAX: 860-529-3991

Job:	***140' Lattice Tower - CSP #83***		
Project:	***East Lyme, Connecticut / S. Analysis***		
Client: Transcend Wireless / T-Mobile / TWM-018	Drawn by: MCD	App'd:	
Code: TIA-222-G	Date: 05/14/19	Scale: NTS	
Path: P:\Projects\Telcom\StructuralsByLocation\Connecticut\EastLymeCSP#83\10_60604314_TWM-018\TIA-G\TWM-018_East Lyme_CSP.erl		Dwg No. E-7	

TNX TOWER FEEDLINE PLAN

Feed Line Plan

Round Flat App In Face App Out Face

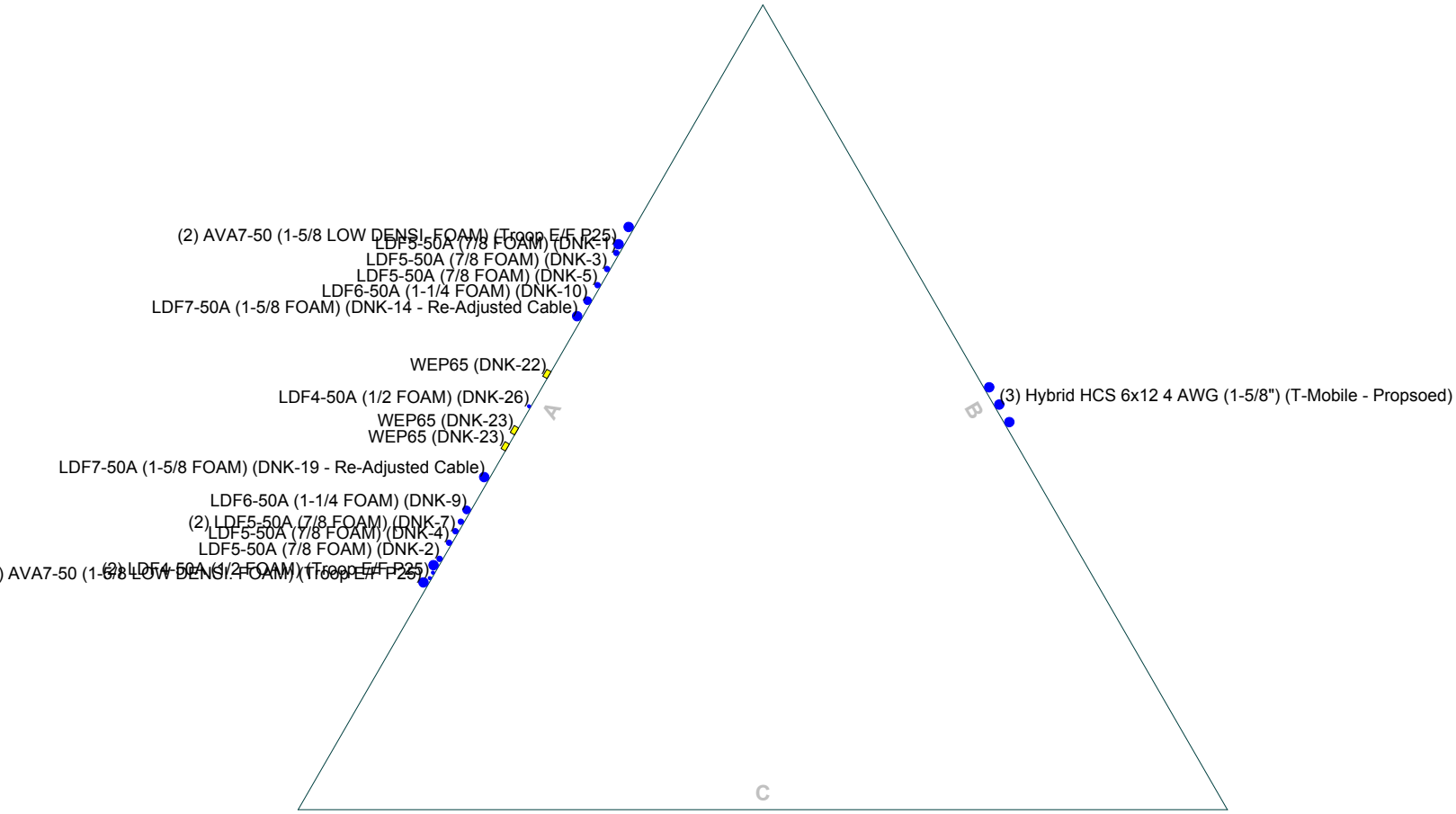

AECOM
500 Enterprise Drive, Suite 3B
Rocky Hill, CT
Phone: 860-529-8882
FAX: 860-529-3991

Job:	***140' Lattice Tower - CSP #83***		
Project:	***East Lyme, Connecticut / S. Analysis***		
Client: Transcend Wireless / T-Mobile / TWM-018	Drawn by: MCD	App'd:	
Code: TIA-222-G	Date: 05/14/19	Scale: NTS	
Path: P:\Projects\Telcom\StructuralsByLocation\Connecticut\EastLymeCSP#83\10_60604314_TWM-018\TIA-G\TWM-018_East Lyme_CSP.erl		Dwg No. E-7	

TNX TOWER TILT, TWIST AND DEFLECTION

TIA-222-G - Service - 60 mph

Maximum Values

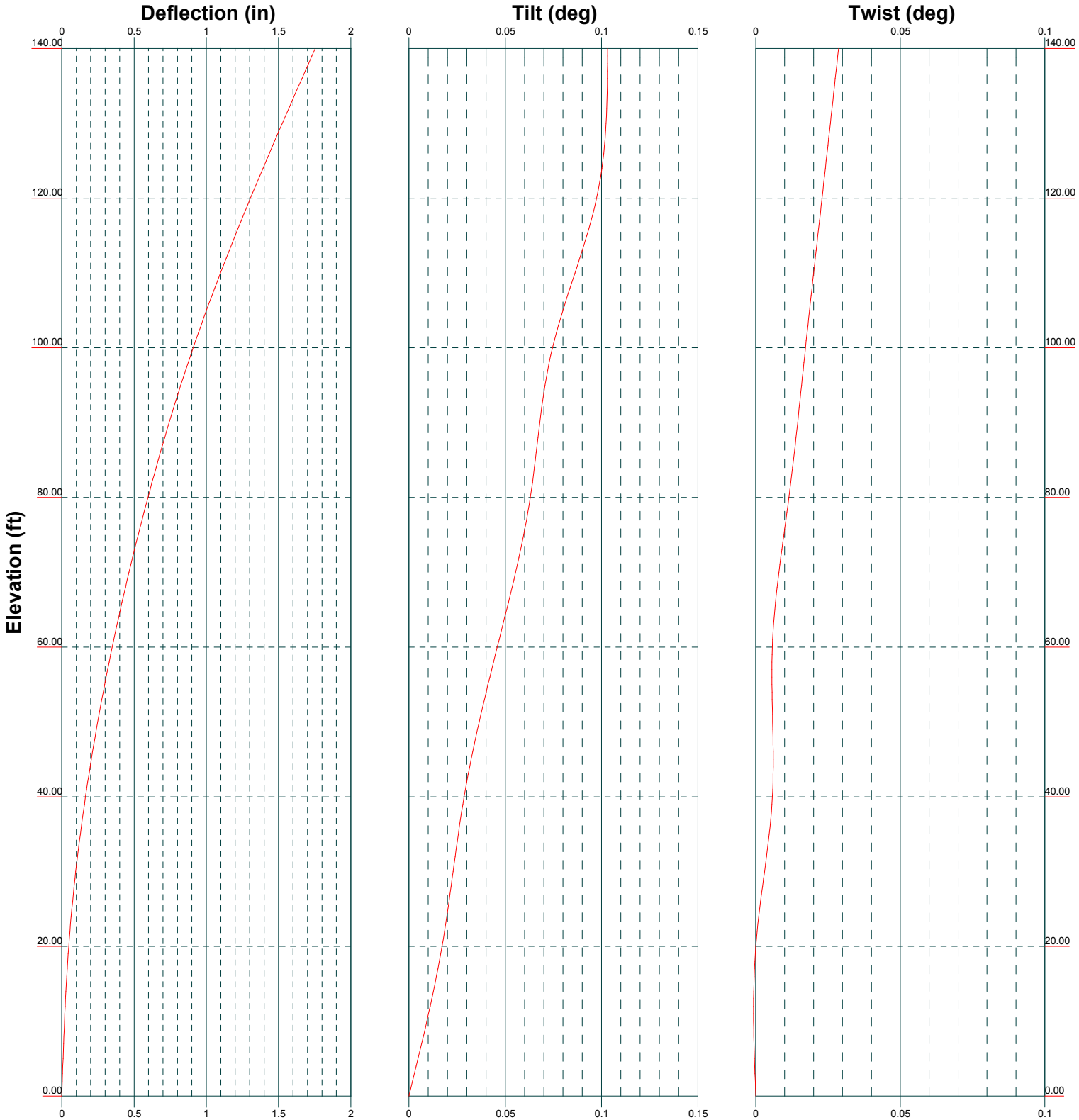

AECOM 500 Enterprise Drive, Suite 3B Rocky Hill, CT Phone: 860-529-8882 FAX: 860-529-3991	Job: ***140' Lattice Tower - CSP #83***		
	Project: ***East Lyme, Connecticut / S. Analysis***		
	Client: Transcend Wireless / T-Mobile / TWM-018	Drawn by: MCD	App'd:
	Code: TIA-222-G	Date: 05/14/19	Scale: NTS
	Path: P:\Projects\Telcom\StructuralsByLocation\Connecticut\EastLymeCSP#83\10_60604314_TWM-018\TIA-G\TWM-018_East Lyme_CSP.eri		Dwg No. E-5

TNX TOWER DETAILED OUTPUT

Tower Input Data

The main tower is a 3x free standing tower with an overall height of 140.00 ft above the ground line.
The base of the tower is set at an elevation of 0.00 ft above the ground line.
The face width of the tower is 6.25 ft at the top and 15.86 ft at the base.
This tower is designed using the TIA-222-G standard.
The following design criteria apply:

Basic wind speed of 105 mph.
Structure Class III.
Exposure Category C.
Topographic Category 3.
Crest Height 54.00 ft.
Nominal ice thickness of 0.7500 in.
Ice thickness is considered to increase with height.
Ice density of 56 pcf.
A wind speed of 50 mph is used in combination with ice.
Deflections calculated using a wind speed of 60 mph.
Listed elevations are from DNK Tower Climb and are identified as Centerline of antenna/appurtenance.
Base Elevation (appx) 280'.
Hi Point = 351' (Pond Hill).
Low Point = 100' Landing Strip (Airport).
H = (351+100)/2 - 280 (abs) = 54 feet.
Pressures are calculated at each section.
Stress ratio used in tower member design is 1.
Local bending stresses due to climbing loads, feed line supports, and appurtenance mounts are not considered.

Options

Consider Moments - Legs
Consider Moments - Horizontals
Consider Moments - Diagonals
Use Moment Magnification
√ Use Code Stress Ratios
√ Use Code Safety Factors - Guys
Escalate Ice
Always Use Max Kz
Use Special Wind Profile
√ Include Bolts In Member Capacity
√ Leg Bolts Are At Top Of Section
√ Secondary Horizontal Braces Leg
Use Diamond Inner Bracing (4 Sided)
√ SR Members Have Cut Ends
SR Members Are Concentric

Distribute Leg Loads As Uniform
Assume Legs Pinned
Assume Rigid Index Plate
√ Use Clear Spans For Wind Area
√ Use Clear Spans For KL/r
Retension Guys To Initial Tension
√ Bypass Mast Stability Checks
Use Azimuth Dish Coefficients
√ Project Wind Area of Appurt.
Autocalc Torque Arm Areas
Add IBC .6D+W Combination
√ Sort Capacity Reports By Component
√ Triangulate Diamond Inner Bracing
Treat Feed Line Bundles As Cylinder
Ignore KL/ry For 60 Deg. Angle Legs

Use ASCE 10 X-Brace Ly Rules
Calculate Redundant Bracing Forces
Ignore Redundant Members in FEA
√ SR Leg Bolts Resist Compression
√ All Leg Panels Have Same Allowable
Offset Girt At Foundation
√ Consider Feed Line Torque
√ Include Angle Block Shear Check
Use TIA-222-G Bracing Resist. Exemption
Use TIA-222-G Tension Splice Exemption

Poles

√ Include Shear-Torsion Interaction
Always Use Sub-Critical Flow
Use Top Mounted Sockets
Pole Without Linear Attachments
Pole With Shroud Or No Appurtenances
Outside and Inside Corner Radii Are Known

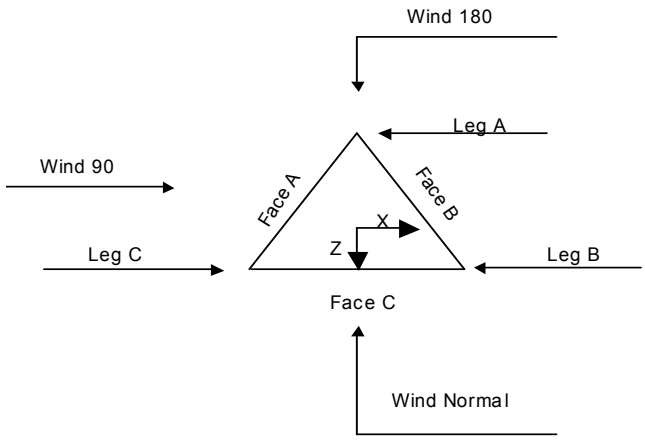

Triangular Tower

Tower Section Geometry

Tower Section	Tower Elevation ft	Assembly Database	Description	Section Width ft	Number of Sections	Section Length ft
T1	140.00-120.00			6.25	1	20.00
T2	120.00-100.00			6.25	1	20.00
T3	100.00-80.00			6.25	1	20.00
T4	80.00-60.00			8.17	1	20.00
T5	60.00-40.00			10.10	1	20.00
T6	40.00-20.00			12.02	1	20.00
T7	20.00-0.00			13.94	1	20.00

Tower Section Geometry *(cont'd)*

Tower Section	Tower Elevation ft	Diagonal Spacing ft	Bracing Type	Has K Brace End Panels	Has Horizontals	Top Girt Offset in	Bottom Girt Offset in
T1	140.00-120.00	5.00	X Brace	No	No	0.0000	0.0000
T2	120.00-100.00	5.00	X Brace	No	No	0.0000	0.0000
T3	100.00-80.00	5.00	X Brace	No	No	0.0000	0.0000
T4	80.00-60.00	5.00	X Brace	No	No	0.0000	0.0000
T5	60.00-40.00	5.00	X Brace	No	No	0.0000	0.0000
T6	40.00-20.00	10.00	X Brace	No	Yes	0.0000	0.0000
T7	20.00-0.00	10.00	X Brace	No	Yes	0.0000	0.0000

Tower Section Geometry *(cont'd)*

Tower Elevation ft	*Leg Type*	*Leg Size*	*Leg Grade*	*Diagonal Type*	*Diagonal Size*	*Diagonal Grade*
T1 140.00-120.00	Solid Round	2	A572-50 (50 ksi)	Equal Angle	L2x2x1/4	A36 (36 ksi)
T2 120.00-100.00	Solid Round	2 3/4	A572-50 (50 ksi)	Equal Angle	L2x2x5/16	A529-50 (50 ksi)
T3 100.00-80.00	Arbitrary Shape	3 SR w/ (4) 2"x0.75" Bars	A572-50 (50 ksi)	Equal Angle	L2x2x1/4	A36 (36 ksi)
T4 80.00-60.00	Arbitrary Shape	3 1/4 SR w/ (4) 2"x0.75" Bars	A572-50 (50 ksi)	Equal Angle	L2x2x5/16	A529-50 (50 ksi)
T5 60.00-40.00	Arbitrary Shape	3 1/2 SR w/ (4) 2"x0.75" Bars	A572-50 (50 ksi)	Equal Angle	L2 1/2x2 1/2x1/4	A36 (36 ksi)
T6 40.00-20.00	Arbitrary Shape	3 3/4 SR w/ (4) 2"x0.75" Bars	A572-50 (50 ksi)	Equal Angle	L3x3x5/16	A529-50 (50 ksi)
T7 20.00-0.00	Arbitrary Shape	3 3/4 SR w/ (4) 2"x0.75" Bars	A572-50 (50 ksi)	Equal Angle	L3 1/2x3 1/2x3/8	A529-50 (50 ksi)

Tower Section Geometry *(cont'd)*

Tower Elevation ft	*Top Girt Type*	*Top Girt Size*	*Top Girt Grade*	*Bottom Girt Type*	*Bottom Girt Size*	*Bottom Girt Grade*
T1 140.00-120.00	Equal Angle	L2x2x1/4	A36 (36 ksi)	Solid Round		A36 (36 ksi)
T3 100.00-80.00	Equal Angle	L2x2x1/4	A36 (36 ksi)	Solid Round		A36 (36 ksi)

Tower Section Geometry *(cont'd)*

Tower Elevation ft	*Secondary Horizontal Type*	*Secondary Horizontal Size*	*Secondary Horizontal Grade*	*Inner Bracing Type*	*Inner Bracing Size*	*Inner Bracing Grade*
T6 40.00-20.00	Equal Angle	L2 1/2x2 1/2x1/4	A36 (36 ksi)	Single Angle		A36 (36 ksi)
T7 20.00-0.00	Equal Angle	L2 1/2x2 1/2x1/4	A36 (36 ksi)	Single Angle		A572-50 (50 ksi)

Tower Section Geometry *(cont'd)*

Tower Elevation ft	Gusset Area (per face) ft^2	Gusset Thickness in	Gusset Grade	Adjust. Factor A_f	Adjust. Factor A_r	Weight Mult.	Double Angle Stitch Bolt Spacing Diagonals in	Double Angle Stitch Bolt Spacing Horizontals in	Double Angle Stitch Bolt Spacing Redundants in
T1 140.00-120.00	0.00	0.0000	A36 (36 ksi)	1	1	1	36.0000	36.0000	36.0000
T2 120.00-100.00	0.00	0.0000	A36 (36 ksi)	1	1	1	36.0000	36.0000	36.0000
T3 100.00-80.00	0.00	0.0000	A36 (36 ksi)	1	1	1	36.0000	36.0000	36.0000
T4 80.00-60.00	0.00	0.0000	A36 (36 ksi)	1	1	1	36.0000	36.0000	36.0000
T5 60.00-40.00	0.00	0.0000	A36 (36 ksi)	1	1	1	36.0000	36.0000	36.0000
T6 40.00-20.00	0.00	0.0000	A36 (36 ksi)	1	1	1	36.0000	36.0000	36.0000
T7 20.00-0.00	0.00	0.0000	A36 (36 ksi)	1	1	1	36.0000	36.0000	36.0000

Tower Section Geometry *(cont'd)*

Tower Elevation ft	Calc K Single Angles	Calc K Solid Rounds	K Factors[1] Legs	X Brace Diags X Y	K Brace Diags X Y	Single Diags X Y	Girts X Y	Horiz. X Y	Sec. Horiz. X Y	Inner Brace X Y
T1 140.00-120.00	Yes	Yes	1	1 1	1 1	1 1	1 1	1 1	1 1	1 1
T2 120.00-100.00	Yes	Yes	1	1 1	1 1	1 1	1 1	1 1	1 1	1 1
T3 100.00-80.00	Yes	Yes	1	1 1	1 1	1 1	1 1	1 1	1 1	1 1
T4 80.00-60.00	Yes	Yes	1	1 1	1 1	1 1	1 1	1 1	1 1	1 1
T5 60.00-40.00	Yes	Yes	1	1 1	1 1	1 1	1 1	1 1	1 1	1 1
T6 40.00-20.00	Yes	Yes	1	1 1	1 1	1 1	1 1	1 1	1 1	1 1
T7 20.00-0.00	Yes	Yes	1	1 1	1 1	1 1	1 1	1 1	1 1	1 1

[1]*Note: K factors are applied to member segment lengths. K-braces without inner supporting members will have the K factor in the out-of-plane direction applied to the overall length.*

Tower Section Geometry *(cont'd)*

Tower Elevation ft	Leg Net Width Deduct in	Leg U	Diagonal Net Width Deduct in	Diagonal U	Top Girt Net Width Deduct in	Top Girt U	Bottom Girt Net Width Deduct in	Bottom Girt U	Mid Girt Net Width Deduct in	Mid Girt U	Long Horizontal Net Width Deduct in	Long Horizontal U	Short Horizontal Net Width Deduct in	Short Horizontal U
T1 140.00-120.00	0.0000	0.75	0.0000	0.75	0.0000	0.75	0.0000	0.75	0.0000	0.75	0.0000	0.75	0.0000	0.75

Tower Elevation ft	Leg		Diagonal		Top Girt		Bottom Girt		Mid Girt		Long Horizontal		Short Horizontal	
	Net Width Deduct in	U	Net Width Deduct in	U	Net Width Deduct in	U	Net Width Deduct in	U	Net Width Deduct in	U	Net Width Deduct in	U	Net Width Deduct in	U
T2 120.00-100.00	0.0000	0.75	0.0000	0.75	0.0000	0.75	0.0000	0.75	0.0000	0.75	0.0000	0.75	0.0000	0.75
T3 100.00-80.00	0.0000	0.75	0.0000	0.75	0.0000	0.75	0.0000	0.75	0.0000	0.75	0.0000	0.75	0.0000	0.75
T4 80.00-60.00	0.0000	0.75	0.0000	0.75	0.0000	0.75	0.0000	0.75	0.0000	0.75	0.0000	0.75	0.0000	0.75
T5 60.00-40.00	0.0000	0.75	0.0000	0.75	0.0000	0.75	0.0000	0.75	0.0000	0.75	0.0000	0.75	0.0000	0.75
T6 40.00-20.00	0.0000	0.75	0.0000	0.75	0.0000	0.75	0.0000	0.75	0.0000	0.75	0.0000	0.75	0.0000	0.75
T7 20.00-0.00	0.0000	0.75	0.0000	0.75	0.0000	0.75	0.0000	0.75	0.0000	0.75	0.0000	0.75	0.0000	0.75

Tower Section Geometry *(cont'd)*

Tower Elevation	Connection Offsets							
	Diagonal				K-Bracing			
	Vert. Top	Horiz. Top	Vert. Bot.	Horiz. Bot.	Vert. Top	Horiz. Top	Vert. Bot.	Horiz. Bot.
ft	in	in	in	in	in	in	in	in
T1 140.00-120.00	0.0000	3.0000	0.0000	3.0000	0.0000	0.0000	0.0000	0.0000
T2 120.00-100.00	0.0000	3.0000	0.0000	3.0000	0.0000	0.0000	0.0000	0.0000
T3 100.00-80.00	0.0000	3.0000	0.0000	3.0000	0.0000	0.0000	0.0000	0.0000
T4 80.00-60.00	0.0000	3.0000	0.0000	3.0000	0.0000	0.0000	0.0000	0.0000
T5 60.00-40.00	0.0000	3.0000	0.0000	3.0000	0.0000	0.0000	0.0000	0.0000
T6 40.00-20.00	0.0000	3.0000	0.0000	3.0000	0.0000	0.0000	0.0000	0.0000
T7 20.00-0.00	0.0000	3.0000	0.0000	3.0000	0.0000	0.0000	0.0000	0.0000

Tower Section Geometry *(cont'd)*

Tower Elevation ft	Leg Connection Type	Leg		Diagonal		Top Girt		Bottom Girt		Mid Girt		Long Horizontal		Short Horizontal	
		Bolt Size in	No.	Bolt Size in	No.	Bolt Size in	No.	Bolt Size in	No.	Bolt Size in	No.	Bolt Size in	No.	Bolt Size in	No.
T1 140.00-120.00	Flange	1.0000 A325N	4	0.6250 A325X	1	0.6250 A325N	1	0.6250 A325N	0	0.6250 A325N	0	0.6250 A325N	0	0.6250 A325N	0
T2 120.00-100.00	Flange	1.0000 A325N	4	0.6250 A325X	1	0.6250 A325N	0	0.6250 A325N	0	0.6250 A325N	0	0.6250 A325N	0	0.6250 A325N	0
T3 100.00-80.00	Flange	1.0000 A325N	4	0.6250 A325X	1	0.6250 A325N	1	0.6250 A325N	0	0.6250 A325N	0	0.6250 A325N	0	0.6250 A325N	0
T4 80.00-60.00	Flange	1.0000 A325N	4	0.6250 A325X	1	0.6250 A325N	0	0.6250 A325N	0	0.6250 A325N	0	0.6250 A325N	0	0.6250 A325N	0
T5 60.00-40.00	Flange	1.1250 A325N	6	0.6250 A325X	1	0.6250 A325N	0	0.6250 A325N	0	0.6250 A325N	0	0.6250 A325N	0	0.6250 A325N	0
T6 40.00-20.00	Flange	1.1250 A325N	6	0.6250 A325X	1	0.6250 A325N	0	0.6250 A325N	0	0.6250 A325N	0	0.6250 A325N	0	0.6250 A325N	1

Tower Elevation ft	Leg Connection Type	Leg		Diagonal		Top Girt		Bottom Girt		Mid Girt		Long Horizontal		Short Horizontal	
		Bolt Size in	No.	Bolt Size in	No.	Bolt Size in	No.	Bolt Size in	No.	Bolt Size in	No.	Bolt Size in	No.	Bolt Size in	No.
T7 20.00-0.00	Flange	1.1250 A325N	6	0.6250 A490N	1	0.6250 A325N	0	0.6250 A325N	0	0.6250 A325N	0	0.6250 A325N	0	0.6250 A325N	1

Feed Line/Linear Appurtenances - Entered As Round Or Flat

Description	Face or Leg	Allow Shield	Exclude From Torque Calculation	Component Type	Placement ft	Face Offset in	Lateral Offset (Frac FW)	#	# Per Row	Clear Spacing in	Width or Diameter in	Perimeter in	Weight plf
LDF4-50A (1/2 FOAM) (DNK-26)	A	No	No	Ar (CaAa)	140.00 - 5.00	0.0000	0	1	1	0.6300	0.6300		0.15
WEP65 (DNK-23)	A	No	No	Af (CaAa)	135.00 - 5.00	0.0000	-0.05	1	1	1.5836	1.5836		0.53
WEP65 (DNK-22)	A	No	No	Af (CaAa)	133.00 - 5.00	0.0000	0.04	1	1	1.5836	1.5836		0.53
LDF7-50A (1-5/8 FOAM) (DNK-19 - Re-Adjusted Cable)	A	No	No	Ar (CaAa)	140.00 - 5.00	0.0000	-0.09	1	1	1.9800	1.9800		0.82
LDF7-50A (1-5/8 FOAM) (DNK-14 - Re-Adjusted Cable)	A	No	No	Ar (CaAa)	125.00 - 5.00	0.0000	0.11	1	1	1.9800	1.9800		0.82
LDF6-50A (1-1/4 FOAM) (DNK-10)	A	No	No	Ar (CaAa)	102.00 - 5.00	0.0000	0.13	1	1	1.5500	1.5500		0.66
LDF6-50A (1-1/4 FOAM) (DNK-9)	A	No	No	Ar (CaAa)	101.00 - 5.00	0.0000	-0.13	1	1	1.5500	1.5500		0.66
LDF5-50A (7/8 FOAM) (DNK-7)	A	No	No	Ar (CaAa)	102.00 - 5.00	0.0000	-0.15	2	2	1.0900	1.0900		0.33
LDF5-50A (7/8 FOAM) (DNK-5)	A	No	No	Ar (CaAa)	80.00 - 5.00	0.0000	0.15	1	1	1.0900	1.0900		0.33
LDF5-50A (7/8 FOAM) (DNK-4)	A	No	No	Ar (CaAa)	80.00 - 5.00	0.0000	-0.17	1	1	1.0900	1.0900		0.33
LDF5-50A (7/8 FOAM) (DNK-3)	A	No	No	Ar (CaAa)	79.00 - 5.00	0.0000	0.17	1	1	1.0900	1.0900		0.33
LDF5-50A (7/8 FOAM) (DNK-2)	A	No	No	Ar (CaAa)	65.00 - 5.00	0.0000	-0.19	1	1	1.0900	1.0900		0.33
LDF5-50A (7/8 FOAM) (DNK-1)	A	No	No	Ar (CaAa)	60.00 - 5.00	0.0000	0.19	1	1	1.0900	1.0900		0.33
AVA7-50 (1-5/8 LOW DENSI. FOAM)	A	No	No	Ar (CaAa)	140.00 - 5.00	0.0000	-0.21	2	2	1.9800	1.9800		0.72

Description	Face or Leg	Allow Shield	Exclude From Torque Calculation	Component Type	Placement ft	Face Offset in	Lateral Offset (Frac FW)	#	# Per Row	Clear Spacing in	Width or Diameter in	Perimeter in	Weight plf
(Troop E/F P25)													
AVA7-50 (1-5/8 LOW DENSI. FOAM) (Troop E/F P25)	A	No	No	Ar (CaAa)	140.00 - 5.00	0.0000	0.21	2	2	1.9800	1.9800		0.72
WEP65 (DNK-23)	A	No	No	Af (CaAa)	140.00 - 5.00	0.0000	-0.03	1	1	1.5836	1.5836		0.53
LDF4-50A (1/2 FOAM) (Troop E/F P25)	A	No	No	Ar (CaAa)	140.00 - 5.00	0.0000	-0.21	2	2	0.6300	0.6300		0.15
Hybrid HCS 6x12 4 AWG (1-5/8") (T-Mobile - Propsoed)	B	No	No	Ar (CaAa)	113.00 - 5.00	0.0000	0	3	3	1.9900	1.9900		1.90

Feed Line/Linear Appurtenances Section Areas

Tower Section	Tower Elevation ft	Face	A_R ft^2	A_F ft^2	C_AA_A In Face ft^2	C_AA_A Out Face ft^2	Weight lb
T1	140.00-120.00	A	0.000	0.000	37.239	0.000	112.54
		B	0.000	0.000	0.000	0.000	0.00
		C	0.000	0.000	0.000	0.000	0.00
T2	120.00-100.00	A	0.000	0.000	44.277	0.000	134.50
		B	0.000	0.000	7.761	0.000	74.10
		C	0.000	0.000	0.000	0.000	0.00
T3	100.00-80.00	A	0.000	0.000	53.936	0.000	170.80
		B	0.000	0.000	11.940	0.000	114.00
		C	0.000	0.000	0.000	0.000	0.00
T4	80.00-60.00	A	0.000	0.000	60.912	0.000	191.92
		B	0.000	0.000	11.940	0.000	114.00
		C	0.000	0.000	0.000	0.000	0.00
T5	60.00-40.00	A	0.000	0.000	64.836	0.000	203.80
		B	0.000	0.000	11.940	0.000	114.00
		C	0.000	0.000	0.000	0.000	0.00
T6	40.00-20.00	A	0.000	0.000	64.836	0.000	203.80
		B	0.000	0.000	11.940	0.000	114.00
		C	0.000	0.000	0.000	0.000	0.00
T7	20.00-0.00	A	0.000	0.000	48.627	0.000	152.85
		B	0.000	0.000	8.955	0.000	85.50
		C	0.000	0.000	0.000	0.000	0.00

Feed Line/Linear Appurtenances Section Areas - With Ice

Tower Section	Tower Elevation ft	Face or Leg	Ice Thickness in	A_R ft^2	A_F ft^2	C_AA_A In Face ft^2	C_AA_A Out Face ft^2	Weight lb
T1	140.00-120.00	A	2.157	0.000	0.000	138.989	0.000	2036.04

Tower Section	Tower Elevation ft	Face or Leg	Ice Thickness in	A_R ft^2	A_F ft^2	C_AA_A In Face ft^2	C_AA_A Out Face ft^2	Weight lb
		B		0.000	0.000	0.000	0.000	0.00
		C		0.000	0.000	0.000	0.000	0.00
T2	120.00-100.00	A	2.128	0.000	0.000	159.536	0.000	2366.14
		B		0.000	0.000	25.218	0.000	433.22
		C		0.000	0.000	0.000	0.000	0.00
T3	100.00-80.00	A	2.100	0.000	0.000	200.120	0.000	2928.06
		B		0.000	0.000	38.613	0.000	658.78
		C		0.000	0.000	0.000	0.000	0.00
T4	80.00-60.00	A	2.077	0.000	0.000	232.309	0.000	3419.63
		B		0.000	0.000	38.462	0.000	652.46
		C		0.000	0.000	0.000	0.000	0.00
T5	60.00-40.00	A	2.067	0.000	0.000	250.373	0.000	3694.87
		B		0.000	0.000	38.394	0.000	649.66
		C		0.000	0.000	0.000	0.000	0.00
T6	40.00-20.00	A	2.079	0.000	0.000	251.292	0.000	3724.14
		B		0.000	0.000	38.470	0.000	652.82
		C		0.000	0.000	0.000	0.000	0.00
T7	20.00-0.00	A	2.070	0.000	0.000	187.956	0.000	2776.75
		B		0.000	0.000	28.810	0.000	487.85
		C		0.000	0.000	0.000	0.000	0.00

Feed Line Center of Pressure

Section	Elevation ft	CP_X in	CP_Z in	CP_X Ice in	CP_Z Ice in
T1	140.00-120.00	-7.0801	-3.5435	-10.3993	-4.3791
T2	120.00-100.00	-5.9566	-4.6354	-8.7018	-5.6329
T3	100.00-80.00	-4.6179	-3.9061	-8.6037	-5.7548
T4	80.00-60.00	-6.0493	-5.0680	-11.6450	-7.9118
T5	60.00-40.00	-6.8056	-5.7137	-13.6542	-9.3959
T6	40.00-20.00	-7.5324	-6.3357	-15.5257	-10.7068
T7	20.00-0.00	-6.2462	-5.3147	-14.1405	-9.8632

Shielding Factor Ka

Tower Section	Feed Line Record No.	Description	Feed Line Segment Elev.	K_a No Ice	K_a Ice
T1	1	LDF4-50A (1/2 FOAM)	120.00 - 140.00	0.6000	0.5844
T1	4	WEP65	120.00 - 135.00	0.6000	0.5844
T1	5	WEP65	120.00 - 133.00	0.6000	0.5844
T1	8	LDF7-50A (1-5/8 FOAM)	120.00 - 140.00	0.6000	0.5844
T1	11	LDF7-50A (1-5/8 FOAM)	120.00 - 125.00	0.6000	0.5844
T1	20	AVA7-50 (1-5/8 LOW DENSI. FOAM)	120.00 - 140.00	0.6000	0.5844
T1	21	AVA7-50 (1-5/8 LOW	120.00 -	0.6000	0.5844

Tower Section	Feed Line Record No.	Description	Feed Line Segment Elev.	K_a No Ice	K_a Ice
		DENSI. FOAM)	140.00		
T1	22	WEP65	120.00 - 140.00	0.6000	0.5844
T1	23	LDF4-50A (1/2 FOAM)	120.00 - 140.00	0.6000	0.5844
T2	1	LDF4-50A (1/2 FOAM)	100.00 - 120.00	0.6000	0.5966
T2	4	WEP65	100.00 - 120.00	0.6000	0.5966
T2	5	WEP65	100.00 - 120.00	0.6000	0.5966
T2	8	LDF7-50A (1-5/8 FOAM)	100.00 - 120.00	0.6000	0.5966
T2	11	LDF7-50A (1-5/8 FOAM)	100.00 - 120.00	0.6000	0.5966
T2	12	LDF6-50A (1-1/4 FOAM)	100.00 - 102.00	0.6000	0.5966
T2	13	LDF6-50A (1-1/4 FOAM)	100.00 - 101.00	0.6000	0.5966
T2	14	LDF5-50A (7/8 FOAM)	100.00 - 102.00	0.6000	0.5966
T2	20	AVA7-50 (1-5/8 LOW DENSI. FOAM)	100.00 - 120.00	0.6000	0.5966
T2	21	AVA7-50 (1-5/8 LOW DENSI. FOAM)	100.00 - 120.00	0.6000	0.5966
T2	22	WEP65	100.00 - 120.00	0.6000	0.5966
T2	23	LDF4-50A (1/2 FOAM)	100.00 - 120.00	0.6000	0.5966
T2	24	Hybrid HCS 6x12 4 AWG (1-5/8")	100.00 - 113.00	0.6000	0.5966
T3	1	LDF4-50A (1/2 FOAM)	80.00 - 100.00	0.6000	0.5675
T3	4	WEP65	80.00 - 100.00	0.6000	0.5675
T3	5	WEP65	80.00 - 100.00	0.6000	0.5675
T3	8	LDF7-50A (1-5/8 FOAM)	80.00 - 100.00	0.6000	0.5675
T3	11	LDF7-50A (1-5/8 FOAM)	80.00 - 100.00	0.6000	0.5675
T3	12	LDF6-50A (1-1/4 FOAM)	80.00 - 100.00	0.6000	0.5675
T3	13	LDF6-50A (1-1/4 FOAM)	80.00 - 100.00	0.6000	0.5675
T3	14	LDF5-50A (7/8 FOAM)	80.00 - 100.00	0.6000	0.5675
T3	20	AVA7-50 (1-5/8 LOW DENSI. FOAM)	80.00 - 100.00	0.6000	0.5675
T3	21	AVA7-50 (1-5/8 LOW DENSI. FOAM)	80.00 - 100.00	0.6000	0.5675
T3	22	WEP65	80.00 - 100.00	0.6000	0.5675
T3	23	LDF4-50A (1/2 FOAM)	80.00 - 100.00	0.6000	0.5675
T3	24	Hybrid HCS 6x12 4 AWG (1-5/8")	80.00 - 100.00	0.6000	0.5675
T4	1	LDF4-50A (1/2 FOAM)	60.00 - 80.00	0.6000	0.6000
T4	4	WEP65	60.00 - 80.00	0.6000	0.6000
T4	5	WEP65	60.00 - 80.00	0.6000	0.6000
T4	8	LDF7-50A (1-5/8 FOAM)	60.00 - 80.00	0.6000	0.6000
T4	11	LDF7-50A (1-5/8 FOAM)	60.00 - 80.00	0.6000	0.6000
T4	12	LDF6-50A (1-1/4 FOAM)	60.00 - 80.00	0.6000	0.6000
T4	13	LDF6-50A (1-1/4 FOAM)	60.00 - 80.00	0.6000	0.6000
T4	14	LDF5-50A (7/8 FOAM)	60.00 - 80.00	0.6000	0.6000
T4	15	LDF5-50A (7/8 FOAM)	60.00 - 80.00	0.6000	0.6000
T4	16	LDF5-50A (7/8 FOAM)	60.00 - 80.00	0.6000	0.6000
T4	17	LDF5-50A (7/8 FOAM)	60.00 - 79.00	0.6000	0.6000
T4	18	LDF5-50A (7/8 FOAM)	60.00 - 65.00	0.6000	0.6000
T4	20	AVA7-50 (1-5/8 LOW DENSI. FOAM)	60.00 - 80.00	0.6000	0.6000
T4	21	AVA7-50 (1-5/8 LOW	60.00 - 80.00	0.6000	0.6000

Tower Section	Feed Line Record No.	Description	Feed Line Segment Elev.	K_a No Ice	K_a Ice
		DENSI. FOAM)			
T4	22	WEP65	60.00 - 80.00	0.6000	0.6000
T4	23	LDF4-50A (1/2 FOAM)	60.00 - 80.00	0.6000	0.6000
T4	24	Hybrid HCS 6x12 4 AWG (1-5/8")	60.00 - 80.00	0.6000	0.6000
T5	1	LDF4-50A (1/2 FOAM)	40.00 - 60.00	0.6000	0.6000
T5	4	WEP65	40.00 - 60.00	0.6000	0.6000
T5	5	WEP65	40.00 - 60.00	0.6000	0.6000
T5	8	LDF7-50A (1-5/8 FOAM)	40.00 - 60.00	0.6000	0.6000
T5	11	LDF7-50A (1-5/8 FOAM)	40.00 - 60.00	0.6000	0.6000
T5	12	LDF6-50A (1-1/4 FOAM)	40.00 - 60.00	0.6000	0.6000
T5	13	LDF6-50A (1-1/4 FOAM)	40.00 - 60.00	0.6000	0.6000
T5	14	LDF5-50A (7/8 FOAM)	40.00 - 60.00	0.6000	0.6000
T5	15	LDF5-50A (7/8 FOAM)	40.00 - 60.00	0.6000	0.6000
T5	16	LDF5-50A (7/8 FOAM)	40.00 - 60.00	0.6000	0.6000
T5	17	LDF5-50A (7/8 FOAM)	40.00 - 60.00	0.6000	0.6000
T5	18	LDF5-50A (7/8 FOAM)	40.00 - 60.00	0.6000	0.6000
T5	19	LDF5-50A (7/8 FOAM)	40.00 - 60.00	0.6000	0.6000
T5	20	AVA7-50 (1-5/8 LOW DENSI. FOAM)	40.00 - 60.00	0.6000	0.6000
T5	21	AVA7-50 (1-5/8 LOW DENSI. FOAM)	40.00 - 60.00	0.6000	0.6000
T5	22	WEP65	40.00 - 60.00	0.6000	0.6000
T5	23	LDF4-50A (1/2 FOAM)	40.00 - 60.00	0.6000	0.6000
T5	24	Hybrid HCS 6x12 4 AWG (1-5/8")	40.00 - 60.00	0.6000	0.6000
T6	1	LDF4-50A (1/2 FOAM)	20.00 - 40.00	0.6000	0.6000
T6	4	WEP65	20.00 - 40.00	0.6000	0.6000
T6	5	WEP65	20.00 - 40.00	0.6000	0.6000
T6	8	LDF7-50A (1-5/8 FOAM)	20.00 - 40.00	0.6000	0.6000
T6	11	LDF7-50A (1-5/8 FOAM)	20.00 - 40.00	0.6000	0.6000
T6	12	LDF6-50A (1-1/4 FOAM)	20.00 - 40.00	0.6000	0.6000
T6	13	LDF6-50A (1-1/4 FOAM)	20.00 - 40.00	0.6000	0.6000
T6	14	LDF5-50A (7/8 FOAM)	20.00 - 40.00	0.6000	0.6000
T6	15	LDF5-50A (7/8 FOAM)	20.00 - 40.00	0.6000	0.6000
T6	16	LDF5-50A (7/8 FOAM)	20.00 - 40.00	0.6000	0.6000
T6	17	LDF5-50A (7/8 FOAM)	20.00 - 40.00	0.6000	0.6000
T6	18	LDF5-50A (7/8 FOAM)	20.00 - 40.00	0.6000	0.6000
T6	19	LDF5-50A (7/8 FOAM)	20.00 - 40.00	0.6000	0.6000
T6	20	AVA7-50 (1-5/8 LOW DENSI. FOAM)	20.00 - 40.00	0.6000	0.6000
T6	21	AVA7-50 (1-5/8 LOW DENSI. FOAM)	20.00 - 40.00	0.6000	0.6000
T6	22	WEP65	20.00 - 40.00	0.6000	0.6000
T6	23	LDF4-50A (1/2 FOAM)	20.00 - 40.00	0.6000	0.6000
T6	24	Hybrid HCS 6x12 4 AWG (1-5/8")	20.00 - 40.00	0.6000	0.6000
T7	1	LDF4-50A (1/2 FOAM)	5.00 - 20.00	0.6000	0.6000
T7	4	WEP65	5.00 - 20.00	0.6000	0.6000
T7	5	WEP65	5.00 - 20.00	0.6000	0.6000
T7	8	LDF7-50A (1-5/8 FOAM)	5.00 - 20.00	0.6000	0.6000
T7	11	LDF7-50A (1-5/8 FOAM)	5.00 - 20.00	0.6000	0.6000
T7	12	LDF6-50A (1-1/4 FOAM)	5.00 - 20.00	0.6000	0.6000
T7	13	LDF6-50A (1-1/4 FOAM)	5.00 - 20.00	0.6000	0.6000
T7	14	LDF5-50A (7/8 FOAM)	5.00 - 20.00	0.6000	0.6000
T7	15	LDF5-50A (7/8 FOAM)	5.00 - 20.00	0.6000	0.6000
T7	16	LDF5-50A (7/8 FOAM)	5.00 - 20.00	0.6000	0.6000
T7	17	LDF5-50A (7/8 FOAM)	5.00 - 20.00	0.6000	0.6000
T7	18	LDF5-50A (7/8 FOAM)	5.00 - 20.00	0.6000	0.6000
T7	19	LDF5-50A (7/8 FOAM)	5.00 - 20.00	0.6000	0.6000
T7	20	AVA7-50 (1-5/8 LOW DENSI. FOAM)	5.00 - 20.00	0.6000	0.6000

Tower Section	Feed Line Record No.	Description	Feed Line Segment Elev.	K_a No Ice	K_a Ice
T7	21	AVA7-50 (1-5/8 LOW DENSI. FOAM)	5.00 - 20.00	0.6000	0.6000
T7	22	WEP65	5.00 - 20.00	0.6000	0.6000
T7	23	LDF4-50A (1/2 FOAM)	5.00 - 20.00	0.6000	0.6000
T7	24	Hybrid HCS 6x12 4 AWG (1-5/8")	5.00 - 20.00	0.6000	0.6000

Discrete Tower Loads

Description	Face or Leg	Offset Type	Offsets: Horz Lateral Vert ft ft ft	Azimuth Adjustment °	Placement ft		C_AA_A Front ft^2	C_AA_A Side ft^2	Weight lb
*** D&K Inventory Climb									
DB438	A	None		0.0000	60.00	No Ice	0.77	0.23	7.00
(DNK-1)						1/2" Ice	0.97	0.54	10.82
						1" Ice	1.17	0.85	17.10
*** D&K-1 Attached to Leg									
531-70 Dipole	B	From Leg	5.00	0.0000	69.00 - 61.00	No Ice	3.23	2.63	40.00
(DNK-2)			0.00			1/2" Ice	5.00	4.39	56.93
			0.00			1" Ice	6.78	6.17	89.45
5' Side-Arm	B	None		0.0000	65.00	No Ice	10.60	10.60	140.00
(DNK-2)						1/2" Ice	15.40	15.40	212.00
						1" Ice	20.20	20.20	284.00
PR-950	C	From Leg	0.50	0.0000	80.00	No Ice	6.35	6.35	38.00
(DNK-3)			0.00			1/2" Ice	11.43	11.43	49.40
			0.00			1" Ice	16.51	16.51	60.80
2'6"x4" Pipe Mount	C	None		0.0000	80.00	No Ice	0.63	0.63	27.00
(DNK-3)						1/2" Ice	0.91	0.91	35.41
						1" Ice	1.09	1.09	45.95
DB222-A	B	From Leg	4.00	0.0000	82.00	No Ice	1.60	1.60	16.00
(DNK-4)			0.00			1/2" Ice	2.88	2.88	20.80
			0.00			1" Ice	4.16	4.16	25.60
4' Side Mount Standoff	B	None		0.0000	81.00	No Ice	2.72	2.72	50.00
(DNK-4)						1/2" Ice	4.91	4.91	89.00
						1" Ice	7.10	7.10	128.00
DB438	B	From Leg	0.50	0.0000	83.00	No Ice	0.77	0.23	7.00
(DNK-5)			0.00			1/2" Ice	0.97	0.54	10.82
			0.00			1" Ice	1.17	0.85	17.10
*** D&K-5 Mounted to DNK-4 MT									
DB586-Y (inverted)	C	From Leg	6.00	0.0000	90.00 - 100.00	No Ice	1.01	1.01	8.25
(DNK-6)			0.00			1/2" Ice	1.28	1.28	16.59
			0.00			1" Ice	1.56	1.56	28.01
6' Side Mount Standoff	C	None		0.0000	102.00	No Ice	4.97	4.97	70.00
(DNK-6)						1/2" Ice	6.12	6.12	130.00
						1" Ice	7.27	7.27	190.00
*** D&K-6,7,8 Share Mount									
432E-83I-01T TTA Unit	C	From Leg	3.00	0.0000	102.00	No Ice	2.85	0.97	25.00
(DNK-7)			0.00			1/2" Ice	3.06	1.11	44.70
			0.00			1" Ice	3.28	1.26	67.39
DB586-Y	C	From Leg	6.00	0.0000	113.00 - 103.00	No Ice	1.01	1.01	8.25

Description	Face or Leg	Offset Type	Offsets: Horz Lateral Vert ft ft ft	Azimuth Adjustment °	Placement ft		C_AA_A Front ft^2	C_AA_A Side ft^2	Weight lb
(DNK-8)			0.00			1/2" Ice	1.28	1.28	16.59
			0.00			1" Ice	1.56	1.56	28.01
DB224-A	A	From Leg	0.50	0.0000	111.00 - 101.00	No Ice	3.15	3.15	32.00
(DNK-9)			0.00			1/2" Ice	5.67	5.67	41.60
			0.00			1" Ice	8.19	8.19	51.20
*** D&K-9 Direct Mount to Leg									
DB222-A (inverted)	C	From Face	6.50	0.0000	92.00 - 102.00	No Ice	1.60	1.60	16.00
(DNK-10)			0.00			1/2" Ice	2.88	2.88	20.80
			0.00			1" Ice	4.16	4.16	25.60
8' Side Arm	B	From Leg	0.00	45.0000	102.00	No Ice	17.20	17.20	325.00
(DNK-10)			0.00			1/2" Ice	24.50	24.50	450.00
			0.00			1" Ice	31.80	31.80	575.00
8' Side Arm	C	From Leg	0.00	-45.0000	102.00	No Ice	17.20	17.20	325.00
(DNK-10)			0.00			1/2" Ice	24.50	24.50	450.00
			0.00			1" Ice	31.80	31.80	575.00
SC479-HF1LDF (inverted)	C	From Face	6.50	0.0000	99.00 - 115.00	No Ice	5.06	5.06	30.00
(DNK-14)			0.00			1/2" Ice	6.54	6.54	69.82
			0.00			1" Ice	8.04	8.04	114.98
8' Side Arm	B	From Leg	0.00	45.0000	118.00	No Ice	17.20	17.20	325.00
(DNK-14)			0.00			1/2" Ice	24.50	24.50	450.00
			0.00			1" Ice	31.80	31.80	575.00
8' Side Arm	C	From Leg	0.00	-45.0000	118.00	No Ice	17.20	17.20	325.00
(DNK-14)			0.00			1/2" Ice	24.50	24.50	450.00
			0.00			1" Ice	31.80	31.80	575.00
8' Side Arm	A	From Leg	0.00	45.0000	118.00	No Ice	17.20	17.20	325.00
(DNK-15)			0.00			1/2" Ice	24.50	24.50	450.00
			0.00			1" Ice	31.80	31.80	575.00
8' Side Arm	B	From Leg	0.00	-45.0000	118.00	No Ice	17.20	17.20	325.00
(DNK-15)			0.00			1/2" Ice	24.50	24.50	450.00
			0.00			1" Ice	31.80	31.80	575.00
6' Side-Arm	C	None		0.0000	125.00	No Ice	10.60	10.60	140.00
(DNK-19)						1/2" Ice	15.40	15.40	212.00
						1" Ice	20.20	20.20	284.00
*** D&K-18,20 and CSP on same mount									
*** D&K-15, 17,21 share mount									
2'6"x4" Pipe Mount	A	From Leg	0.50	0.0000	132.50	No Ice	0.62	0.62	27.00
(DNK-22)			0.00			1/2" Ice	0.91	0.91	35.41
			0.00			1" Ice	1.09	1.09	45.95
2'6"x4" Pipe Mount	C	From Leg	0.50	0.0000	134.50	No Ice	0.62	0.62	27.00
(DNK-23)			0.00			1/2" Ice	0.91	0.91	35.41
			0.00			1" Ice	1.09	1.09	45.95
Flash Beacon Lighting	A	None		0.0000	140.00	No Ice	2.70	2.70	50.00
(DNK-26)						1/2" Ice	3.10	3.10	70.00
						1" Ice	3.50	3.50	90.00
Lightning Rod 1"x10'	A	None		0.0000	156.00	No Ice	1.00	1.00	40.00
(DNK-27)						1/2" Ice	2.02	2.02	49.26
						1" Ice	3.05	3.05	64.89
L-810 Obstruction Lighting	A	From Leg	3.00	0.0000	70.00	No Ice	0.29	0.29	6.65
(1)			0.00			1/2" Ice	0.47	0.47	12.44
(Tower)			0.00			1" Ice	0.62	0.62	19.93
L-810 Obstruction Lighting	C	From Leg	3.00	0.0000	70.00	No Ice	0.29	0.29	6.65
(1)			0.00			1/2" Ice	0.47	0.47	12.44
(Tower)			0.00			1" Ice	0.62	0.62	19.93
*** PNS/Motorola Additions									

Description	Face or Leg	Offset Type	Offsets: Horz Lateral Vert ft ft ft	Azimuth Adjustment °	Placement ft		C_AA_A Front ft^2	C_AA_A Side ft^2	Weight lb
WPA-70063-2CF Panel	A	From Face	3.00	0.0000	140.00	No Ice	2.22	1.45	30.00
Antenna			0.00			1/2" Ice	2.42	1.74	48.64
(Tr. E P25 TX)			3.00			1" Ice	2.63	2.05	73.64
432E-83I-01T TTA Unit	A	From Face	3.00	0.0000	140.00	No Ice	2.85	0.97	25.00
(Tr. E P25 TX/RX)			0.00			1/2" Ice	3.06	1.11	44.70
			0.00			1" Ice	3.28	1.26	67.39
WPA-70063-2CF Panel	A	From Face	3.00	0.0000	140.00	No Ice	2.22	1.45	30.00
Antenna			0.00			1/2" Ice	2.42	1.74	48.64
(Tr. E P25 RX)			-3.00			1" Ice	2.63	2.05	73.64
6' Side-Arm	A	None		0.0000	140.00	No Ice	10.60	10.60	140.00
(Tr. E P25 Antenna Mount)						1/2" Ice	15.40	15.40	212.00
						1" Ice	20.20	20.20	284.00
*** Replacement of existing CSP-4 OGT9									
WPA-70063-2CF Panel	C	From Face	3.00	0.0000	140.00	No Ice	2.22	1.45	30.00
Antenna			0.00			1/2" Ice	2.42	1.74	48.64
(Tr. E P25 (Diversity) RX)			-3.00			1" Ice	2.63	2.05	73.64
SE419-SWBP2LDF(D00)	C	From Face	3.00	0.0000	140.00	No Ice	4.15	9.89	30.00
Panel			0.00			1/2" Ice	5.14	10.66	80.36
(Tr. F P25 TX)			0.00			1" Ice	6.10	11.45	136.89
432E-83I-01T TTA Unit	C	From Face	0.00	0.0000	140.00	No Ice	2.85	0.97	25.00
(Tr. F P25 TX/RX)			0.00			1/2" Ice	3.06	1.11	44.70
			0.00			1" Ice	3.28	1.26	67.39
(2) 6' Side-Arm (PSA6 -	B	None		0.0000	140.00	No Ice	10.60	10.60	140.00
SitePro1)						1/2" Ice	15.40	15.40	212.00
(Tr. F P25 Antenna Mount)						1" Ice	20.20	20.20	284.00
SC479-HF1LDF	B	From Face	3.00	0.0000	128.00 - 140.00	No Ice	5.06	5.06	30.00
(D00I-E6085)			0.00			1/2" Ice	6.54	6.54	69.82
(Tr. F P25 Antenna)			0.00			1" Ice	8.04	8.04	114.98
***Replacement of existing CSP-15 DB810									
SC479-HF1LDF	B	From Face	6.50	0.0000	128.00 - 140.00	No Ice	5.06	5.06	30.00
(D00I-E6085)			0.00			1/2" Ice	6.54	6.54	69.82
(Tr. F P25 (Diversity) RX)			0.00			1" Ice	8.04	8.04	114.98
*** Removal DNK-16									
*** Removal DNK-21									
*** Removal CSP									
*** Replacement of existing DNK-14									
*** Removal of DNK-18,-20,-24,-25 (7/2017)									
6'x4.5" OD Pipe Mount	A	From Face	0.00	0.0000	134.00	No Ice	1.50	1.50	70.00
(CSP - Dish)			0.00			1/2" Ice	3.01	3.01	93.13
			0.00			1" Ice	3.42	3.42	118.95
6'x4.5" OD Pipe Mount	A	From Face	0.00	0.0000	140.00	No Ice	1.50	1.50	70.00
(Tr. E P25)			0.00			1/2" Ice	3.01	3.01	93.13
			0.00			1" Ice	3.42	3.42	118.95
6'x4.5" OD Pipe Mount	C	From Face	0.00	0.0000	140.00	No Ice	1.50	1.50	70.00
(Tr. E (Diversity) P25)			0.00			1/2" Ice	3.01	3.01	93.13
			0.00			1" Ice	3.42	3.42	118.95
* TWM-018									
Commscope SF-QV12-B	A	From Leg	0.50	0.0000	112.00	No Ice	17.06	8.28	415.00
Mount Frame			0.00			1/2" Ice	23.43	11.78	621.52
(T-Mobile - Proposed)			0.00			1" Ice	29.75	15.19	891.81
Commscope SF-QV12-B	B	From Leg	0.50	0.0000	112.00	No Ice	17.06	8.28	415.00
Mount Frame			0.00			1/2" Ice	23.43	11.78	621.52
(T-Mobile - Proposed)			0.00			1" Ice	29.75	15.19	891.81

Description	Face or Leg	Offset Type	Offsets: Horz Lateral Vert ft ft ft	Azimuth Adjustment °	Placement ft		C_AA_A Front ft^2	C_AA_A Side ft^2	Weight lb
Commscope SF-QV12-B	C	From Leg	0.50	0.0000	112.00	No Ice	17.06	8.28	415.00
Mount Frame			0.00			1/2" Ice	23.43	11.78	621.52
(T-Mobile - Proposed)			0.00			1" Ice	29.75	15.19	891.81
RFS	A	From Leg	1.50	0.0000	112.00	No Ice	20.24	8.89	153.30
APXVAARR24_43-U-NA20			0.00			1/2" Ice	20.89	9.49	265.89
Panel Antenna			0.00			1" Ice	21.54	10.09	387.02
(T-Mobile - Proposed)									
RFS	B	From Leg	1.50	0.0000	112.00	No Ice	20.24	8.89	153.30
APXVAARR24_43-U-NA20			0.00			1/2" Ice	20.89	9.49	265.89
Panel Antenna			0.00			1" Ice	21.54	10.09	387.02
(T-Mobile - Proposed)									
RFS	C	From Leg	1.50	0.0000	112.00	No Ice	20.24	8.89	153.30
APXVAARR24_43-U-NA20			0.00			1/2" Ice	20.89	9.49	265.89
Panel Antenna			0.00			1" Ice	21.54	10.09	387.02
(T-Mobile - Proposed)									
Ericsson 4449 B71 + B12	A	From Leg	0.75	0.0000	112.00	No Ice	1.66	1.16	80.00
Radio Unit			0.00			1/2" Ice	1.82	1.29	96.16
(T-Mobile - Proposed)			0.00			1" Ice	1.98	1.44	114.94
Ericsson 4449 B71 + B12	B	From Leg	0.75	0.0000	112.00	No Ice	1.66	1.16	80.00
Radio Unit			0.00			1/2" Ice	1.82	1.29	96.16
(T-Mobile - Proposed)			0.00			1" Ice	1.98	1.44	114.94
Ericsson 4449 B71 + B12	C	From Leg	0.75	0.0000	112.00	No Ice	1.66	1.16	80.00
Radio Unit			0.00			1/2" Ice	1.82	1.29	96.16
(T-Mobile - Proposed)			0.00			1" Ice	1.98	1.44	114.94
Ericsson Radio 4415 B25	A	From Leg	0.75	0.0000	112.00	No Ice	1.86	0.83	50.00
RRH Unit			0.00			1/2" Ice	2.03	0.96	64.25
(T-Mobile - Proposed)			0.00			1" Ice	2.20	1.09	81.03
Ericsson Radio 4415 B25	B	From Leg	0.75	0.0000	112.00	No Ice	1.86	0.83	50.00
RRH Unit			0.00			1/2" Ice	2.03	0.96	64.25
(T-Mobile - Proposed)			0.00			1" Ice	2.20	1.09	81.03
Ericsson Radio 4415 B25	C	From Leg	0.75	0.0000	112.00	No Ice	1.86	0.83	50.00
RRH Unit			0.00			1/2" Ice	2.03	0.96	64.25
(T-Mobile - Proposed)			0.00			1" Ice	2.20	1.09	81.03
Ericsson Radio 4415 B66A	A	From Leg	0.75	0.0000	112.00	No Ice	1.64	1.35	70.00
RRH			0.00			1/2" Ice	1.80	1.50	89.60
(T-Mobile - Proposed)			0.00			1" Ice	1.97	1.65	109.92
Ericsson Radio 4415 B66A	B	From Leg	0.75	0.0000	112.00	No Ice	1.64	1.35	70.00
RRH			0.00			1/2" Ice	1.80	1.50	89.60
(T-Mobile - Proposed)			0.00			1" Ice	1.97	1.65	109.92
Ericsson Radio 4415 B66A	C	From Leg	0.75	0.0000	112.00	No Ice	1.64	1.35	70.00
RRH			0.00			1/2" Ice	1.80	1.50	89.60
(T-Mobile - Proposed)			0.00			1" Ice	1.97	1.65	109.92
* TWM-018									

Dishes

Description	Face or Leg	Dish Type	Offset Type	Offsets: Horz Lateral Vert ft	Azimuth Adjustment °	3 dB Beam Width °	Elevation ft	Outside Diameter ft	Aperture Area ft^2	Weight lb

Description	Face or Leg	Dish Type	Offset Type	Offsets: Horz Lateral Vert ft	Azimuth Adjustment °	3 dB Beam Width °	Elevation ft	Outside Diameter ft		Aperture Area ft^2	Weight lb
6' Dish w/ Radome	A	Paraboloid	From	0.50	Worst		132.50	6.00	No Ice	28.27	240.00
(PA6-65)		w/Radome	Leg	0.00					1/2" Ice	29.07	290.00
(DNK-22)				0.00					1" Ice	29.87	340.00
6' Dish w/ Radome	C	Paraboloid	준	0.50	Worst		134.50	6.00	No Ice	28.27	240.00
(PA6-65)		w/Radome		0.00					1/2" Ice	29.07	290.00
(DNK-23)			0.50	0.00					1" Ice	29.87	340.00
Commscope	A	Paraboloid	From	0.50	Worst		134.50	6.00	No Ice	28.27	310.00
PAR6-59W-PXA/A		w/Radome	Face	0.00					1/2" Ice	29.07	460.00
(CSP)				0.00					1" Ice	29.86	610.00

222-G Verification Constants

Constant	Value
Wind Importance Factor Without Ice	1.15
Wind Importance Factor With Ice Factor	1
Ice Importance Factor	1.25
K_d	0.85
Z_g	900
α	9.5
K_{zmin}	0.85
K_e	1
K_t	0.53
f	2

222-G Section Verification ArRr By Element

Section Elevation ft	Elem. Num.	Size	C	C w/Ice	Face	e	e w/Ice	A_r ft^2	A_r w/Ice ft^2	A_rR_r ft^2	A_rR_r w/Ice ft^2
T1	1	2	21.797	30.556	C	0.139	0.416	3.333	10.523	1.888	6.768
140.00-120.00											
	1	2	21.797	30.556	A	0.139	0.416	3.333	10.523	1.888	6.768
	2	2	21.797	30.556	C	0.139	0.416	3.333	10.523	1.888	6.768
	2	2	21.797	30.556	B	0.139	0.416	3.333	10.523	1.888	6.768
	3	2	21.797	30.556	B	0.139	0.416	3.333	10.523	1.888	6.768
	3	2	21.797	30.556	A	0.139	0.416	3.333	10.523	1.888	6.768
					A		Sum:	6.667	21.047	3.777	13.536
					B			6.667	21.047	3.777	13.536
					C			6.667	21.047	3.777	13.536
T2	31	2 3/4	29.587	33.473	C	0.149	0.403	4.583	11.677	2.601	7.447
120.00-100.00											
	31	2 3/4	29.587	33.473	A	0.149	0.403	4.583	11.677	2.601	7.447
	32	2 3/4	29.587	33.473	C	0.149	0.403	4.583	11.677	2.601	7.447
	32	2 3/4	29.587	33.473	B	0.149	0.403	4.583	11.677	2.601	7.447
	33	2 3/4	29.587	33.473	B	0.149	0.403	4.583	11.677	2.601	7.447
	33	2 3/4	29.587	33.473	A	0.149	0.403	4.583	11.677	2.601	7.447
					A		Sum:	9.167	23.355	5.202	14.894
					B			9.167	23.355	5.202	14.894
					C			9.167	23.355	5.202	14.894
T3 100.00-80.00					A		Sum:	0.000	0.000	0.000	0.000
					B			0.000	0.000	0.000	0.000
					C			0.000	0.000	0.000	0.000

Section Elevation ft	Elem. Num.	Size	C	C w/Ice	Face	e	e w/Ice	A_r ft^2	A_r w/Ice ft^2	A_rR_r ft^2	A_rR_r w/Ice ft^2
T4 80.00-60.00					A		Sum:	0.000	0.000	0.000	0.000
					B			0.000	0.000	0.000	0.000
					C			0.000	0.000	0.000	0.000
T5 60.00-40.00					A		Sum:	0.000	0.000	0.000	0.000
					B			0.000	0.000	0.000	0.000
					C			0.000	0.000	0.000	0.000
T6 40.00-20.00					A		Sum:	0.000	0.000	0.000	0.000
					B			0.000	0.000	0.000	0.000
					C			0.000	0.000	0.000	0.000
T7 20.00-0.00					A		Sum:	0.000	0.000	0.000	0.000
					B			0.000	0.000	0.000	0.000
					C			0.000	0.000	0.000	0.000

222-G Section Verification Tables - No Ice

Section Elevation ft	z_{wind} ft	z_{ice} ft	K_z	K_h	K_{zt}	t_z in	q_z psf	Face	e	A_rR_r ft^2
T1 140.00-120.00	130.00		1.337	123.324	1.009		37	A	0.139	3.777
								B	0.139	3.777
								C	0.139	3.777
T2 120.00-100.00	110.00		1.291	58.796	1.018		36	A	0.149	5.202
								B	0.149	5.202
								C	0.149	5.202
T3 100.00-80.00	90.00		1.238	28.032	1.038		35	A	0.228	0.000
								B	0.228	0.000
								C	0.228	0.000
T4 80.00-60.00	70.00		1.174	13.364	1.081		35	A	0.193	0.000
								B	0.193	0.000
								C	0.193	0.000
T5 60.00-40.00	50.00		1.094	6.372	1.173		35	A	0.191	0.000
								B	0.191	0.000
								C	0.191	0.000
T6 40.00-20.00	30.00		0.982	3.038	1.379		37	A	0.172	0.000
								B	0.172	0.000
								C	0.172	0.000
T7 20.00-0.00	10.00		0.85	1.448	1.866		44	A	0.168	0.000
								B	0.168	0.000
								C	0.168	0.000

222-G Section Verification Tables - Ice

Section Elevation ft	z_{wind} ft	z_{ice} ft	K_z	K_h	K_{zt}	t_z in	q_z psf	Face	e	A_rR_r ft^2
T1 140.00-120.00	130.00	130.00	1.337	123.324	1.009	2.1570	7	A	0.416	29.036
								B	0.416	29.036
								C	0.416	29.036

Section Elevation ft	z_{wind} ft	z_{ice} ft	K_z	K_h	K_{zt}	t_z in	q_z psf	Face	e	A_rR_r ft^2
T2 120.00-100.00	110.00	110.00	1.291	58.796	1.018	2.1282	7	A	0.403	28.683
								B	0.403	28.683
								C	0.403	28.683
T3 100.00-80.00	90.00	90.00	1.238	28.032	1.038	2.1002	7	A	0.432	16.639
								B	0.432	16.639
								C	0.432	16.639
T4 80.00-60.00	70.00	70.00	1.174	13.364	1.081	2.0772	7	A	0.369	17.233
								B	0.369	17.233
								C	0.369	17.233
T5 60.00-40.00	50.00	50.00	1.094	6.372	1.173	2.0670	7	A	0.357	19.925
								B	0.357	19.925
								C	0.357	19.925
T6 40.00-20.00	30.00	30.00	0.982	3.038	1.379	2.0785	7	A	0.311	18.496
								B	0.311	18.496
								C	0.311	18.496
T7 20.00-0.00	10.00	10.00	0.85	1.448	1.866	2.0699	9	A	0.3	20.385
								B	0.3	20.385
								C	0.3	20.385

222-G Section Verification Tables - Service

Section Elevation ft	z_{wind} ft	z_{ice} ft	K_z	K_h	K_{zt}	t_z in	q_z psf	Face	e	A_rR_r ft^2
T1 140.00-120.00	130.00		1.337	123.324	1.009		11	A	0.139	3.777
								B	0.139	3.777
								C	0.139	3.777
T2 120.00-100.00	110.00		1.291	58.796	1.018		10	A	0.149	5.202
								B	0.149	5.202
								C	0.149	5.202
T3 100.00-80.00	90.00		1.238	28.032	1.038		10	A	0.228	0.000
								B	0.228	0.000
								C	0.228	0.000
T4 80.00-60.00	70.00		1.174	13.364	1.081		10	A	0.193	0.000
								B	0.193	0.000
								C	0.193	0.000
T5 60.00-40.00	50.00		1.094	6.372	1.173		10	A	0.191	0.000
								B	0.191	0.000
								C	0.191	0.000
T6 40.00-20.00	30.00		0.982	3.038	1.379		11	A	0.172	0.000
								B	0.172	0.000
								C	0.172	0.000
T7 20.00-0.00	10.00		0.85	1.448	1.866		12	A	0.168	0.000
								B	0.168	0.000
								C	0.168	0.000

Tower Pressures - No Ice

$G_H = 0.850$

Section Elevation ft	z ft	K_Z	q_z psf	A_G ft²	Face	A_F ft²	A_R ft²	A_{leg} ft²	Leg %	C_AA_A In Face ft²	C_AA_A Out Face ft²
T1	130.00	1.337	37	128.333	A	11.174	6.667	6.667	37.37	37.239	0.000
140.00-120.00					B	11.174	6.667		37.37	0.000	0.000
					C	11.174	6.667		37.37	0.000	0.000
T2	110.00	1.291	36	129.583	A	10.160	9.167	9.167	47.43	44.277	0.000
120.00-100.00					B	10.160	9.167		47.43	7.761	0.000
					C	10.160	9.167		47.43	0.000	0.000
T3	90.00	1.238	35	155.908	A	35.541	0.000	23.369	65.75	53.936	0.000
100.00-80.00					B	35.541	0.000		65.75	11.940	0.000
					C	35.541	0.000		65.75	0.000	0.000
T4 80.00-60.00	70.00	1.174	35	194.781	A	37.513	0.000	24.204	64.52	60.912	0.000
					B	37.513	0.000		64.52	11.940	0.000
					C	37.513	0.000		64.52	0.000	0.000
T5 60.00-40.00	50.00	1.094	35	233.654	A	44.512	0.000	25.038	56.25	64.836	0.000
					B	44.512	0.000		56.25	11.940	0.000
					C	44.512	0.000		56.25	0.000	0.000
T6 40.00-20.00	30.00	0.982	37	272.528	A	47.002	0.000	25.873	55.05	64.836	0.000
					B	47.002	0.000		55.05	11.940	0.000
					C	47.002	0.000		55.05	0.000	0.000
T7 20.00-0.00	10.00	0.85	44	310.984	A	52.268	0.000	25.873	49.50	48.627	0.000
					B	52.268	0.000		49.50	8.955	0.000
					C	52.268	0.000		49.50	0.000	0.000

Tower Pressure - With Ice

$G_H = 0.850$

Section Elevation ft	z ft	K_Z	q_z psf	t_Z in	A_G ft²	Face	A_F ft²	A_R ft²	A_{leg} ft²	Leg %	C_AA_A In Face ft²	C_AA_A Out Face ft²
T1	130.00	1.337	7	2.1570	135.523	A	11.174	45.148	21.047	37.37	138.989	0.000
140.00-120.00						B	11.174	45.148		37.37	0.000	0.000
						C	11.174	45.148		37.37	0.000	0.000
T2	110.00	1.291	7	2.1282	136.677	A	10.160	44.977	23.355	42.36	159.536	0.000
120.00-100.00						B	10.160	44.977		42.36	25.218	0.000
						C	10.160	44.977		42.36	0.000	0.000
T3 100.00-80.00	90.00	1.238	7	2.1002	162.917	A	44.890	25.564	32.718	46.44	200.120	0.000
						B	44.890	25.564		46.44	38.613	0.000
						C	44.890	25.564		46.44	0.000	0.000
T4 80.00-60.00	70.00	1.174	7	2.0772	201.713	A	46.760	27.647	33.450	44.96	232.309	0.000
						B	46.760	27.647		44.96	38.462	0.000
						C	46.760	27.647		44.96	0.000	0.000
T5 60.00-40.00	50.00	1.094	7	2.0670	240.552	A	53.713	32.202	34.239	39.85	250.373	0.000
						B	53.713	32.202		39.85	38.394	0.000
						C	53.713	32.202		39.85	0.000	0.000
T6 40.00-20.00	30.00	0.982	7	2.0785	279.464	A	56.254	30.700	35.125	40.39	251.292	0.000
						B	56.254	30.700		40.39	38.470	0.000
						C	56.254	30.700		40.39	0.000	0.000
T7 20.00-0.00	10.00	0.85	9	2.0699	317.891	A	61.482	34.028	35.087	36.74	187.956	0.000
						B	61.482	34.028		36.74	28.810	0.000
						C	61.482	34.028		36.74	0.000	0.000

Tower Pressure - Service

$G_H = 0.850$

Section Elevation ft	z ft	K_Z	q_z psf	A_G ft²	Face	A_F ft²	A_R ft²	A_{leg} ft²	Leg %	C_AA_A In Face ft²	C_AA_A Out Face ft²
T1	130.00	1.337	11	128.333	A	11.174	6.667	6.667	37.37	37.239	0.000
140.00-120.00					B	11.174	6.667		37.37	0.000	0.000
					C	11.174	6.667		37.37	0.000	0.000
T2	110.00	1.291	10	129.583	A	10.160	9.167	9.167	47.43	44.277	0.000
120.00-100.00					B	10.160	9.167		47.43	7.761	0.000
					C	10.160	9.167		47.43	0.000	0.000
T3	90.00	1.238	10	155.908	A	35.541	0.000	23.369	65.75	53.936	0.000
100.00-80.00					B	35.541	0.000		65.75	11.940	0.000
					C	35.541	0.000		65.75	0.000	0.000
T4 80.00-60.00	70.00	1.174	10	194.781	A	37.513	0.000	24.204	64.52	60.912	0.000
					B	37.513	0.000		64.52	11.940	0.000
					C	37.513	0.000		64.52	0.000	0.000
T5 60.00-40.00	50.00	1.094	10	233.654	A	44.512	0.000	25.038	56.25	64.836	0.000
					B	44.512	0.000		56.25	11.940	0.000
					C	44.512	0.000		56.25	0.000	0.000
T6 40.00-20.00	30.00	0.982	11	272.528	A	47.002	0.000	25.873	55.05	64.836	0.000
					B	47.002	0.000		55.05	11.940	0.000
					C	47.002	0.000		55.05	0.000	0.000
T7 20.00-0.00	10.00	0.85	12	310.984	A	52.268	0.000	25.873	49.50	48.627	0.000
					B	52.268	0.000		49.50	8.955	0.000
					C	52.268	0.000		49.50	0.000	0.000

Tower Forces - No Ice - Wind Normal To Face

Section Elevation ft	Add Weight lb	Self Weight lb	Face	e	C_F	q_z psf	D_F	D_R	A_E ft²	F lb	w plf	Ctrl. Face
T1	112.54	1284.96	A	0.139	2.812	37	1	1	14.950	2036.95	101.85	C
140.00-120.00			B	0.139	2.812		1	1	14.950			
			C	0.139	2.812		1	1	14.950			
T2	208.60	1928.30	A	0.149	2.775	36	1	1	15.361	2276.62	113.83	C
120.00-100.00			B	0.149	2.775		1	1	15.361			
			C	0.149	2.775		1	1	15.361			
T3	284.80	3383.47	A	0.228	2.505	35	1	1	35.541	3874.53	193.73	C
100.00-80.00			B	0.228	2.505		1	1	35.541			
			C	0.228	2.505		1	1	35.541			
T4	305.92	3869.62	A	0.193	2.621	35	1	1	37.513	4226.78	211.34	C
80.00-60.00			B	0.193	2.621		1	1	37.513			
			C	0.193	2.621		1	1	37.513			
T5	317.80	4338.02	A	0.191	2.628	35	1	1	44.512	4906.72	245.34	C
60.00-40.00			B	0.191	2.628		1	1	44.512			
			C	0.191	2.628		1	1	44.512			
T6	317.80	4970.69	A	0.172	2.691	37	1	1	47.002	5481.74	274.09	C
40.00-20.00			B	0.172	2.691		1	1	47.002			
			C	0.172	2.691		1	1	47.002			
T7 20.00-0.00	238.35	5630.76	A	0.168	2.706	44	1	1	52.268	6545.42	327.27	C
			B	0.168	2.706		1	1	52.268			
			C	0.168	2.706		1	1	52.268			
Sum Weight:	1785.81	25405.81						OTM	1635.06 kip-ft	29348.75		

Tower Forces - No Ice - Wind 45 To Face

Section Elevation ft	Add Weight lb	Self Weight lb	Face	e	C_F	q_z psf	D_F	D_R	A_E ft^2	F lb	w plf	Ctrl. Face
T1	112.54	1284.96	A	0.139	2.812	37	0.825	1	12.995	1862.98	93.15	C
140.00-120.00			B	0.139	2.812		0.825	1	12.995			
			C	0.139	2.812		0.825	1	12.995			
T2	208.60	1928.30	A	0.149	2.775	36	0.825	1	13.584	2124.53	106.23	C
120.00-100.00			B	0.149	2.775		0.825	1	13.584			
			C	0.149	2.775		0.825	1	13.584			
T3	284.80	3383.47	A	0.228	2.505	35	0.825	1	29.322	3404.94	170.25	C
100.00-80.00			B	0.228	2.505		0.825	1	29.322			
			C	0.228	2.505		0.825	1	29.322			
T4	305.92	3869.62	A	0.193	2.621	35	0.825	1	30.948	3714.73	185.74	C
80.00-60.00			B	0.193	2.621		0.825	1	30.948			
			C	0.193	2.621		0.825	1	30.948			
T5	317.80	4338.02	A	0.191	2.628	35	0.825	1	36.723	4290.65	214.53	C
60.00-40.00			B	0.191	2.628		0.825	1	36.723			
			C	0.191	2.628		0.825	1	36.723			
T6	317.80	4970.69	A	0.172	2.691	37	0.825	1	38.777	4778.57	238.93	C
40.00-20.00			B	0.172	2.691		0.825	1	38.777			
			C	0.172	2.691		0.825	1	38.777			
T7 20.00-0.00	238.35	5630.76	A	0.168	2.706	44	0.825	1	43.121	5624.84	281.24	C
			B	0.168	2.706		0.825	1	43.121			
			C	0.168	2.706		0.825	1	43.121			
Sum Weight:	1785.81	25405.81						OTM	1456.50 kip-ft	25801.24		

Tower Forces - No Ice - Wind 60 To Face

Section Elevation ft	Add Weight lb	Self Weight lb	Face	e	C_F	q_z psf	D_F	D_R	A_E ft^2	F lb	w plf	Ctrl. Face
T1	112.54	1284.96	A	0.139	2.812	37	0.8	1	12.716	1838.13	91.91	C
140.00-120.00			B	0.139	2.812		0.8	1	12.716			
			C	0.139	2.812		0.8	1	12.716			
T2	208.60	1928.30	A	0.149	2.775	36	0.8	1	13.330	2102.80	105.14	C
120.00-100.00			B	0.149	2.775		0.8	1	13.330			
			C	0.149	2.775		0.8	1	13.330			
T3	284.80	3383.47	A	0.228	2.505	35	0.8	1	28.433	3337.85	166.89	C
100.00-80.00			B	0.228	2.505		0.8	1	28.433			
			C	0.228	2.505		0.8	1	28.433			
T4	305.92	3869.62	A	0.193	2.621	35	0.8	1	30.011	3641.58	182.08	C
80.00-60.00			B	0.193	2.621		0.8	1	30.011			
			C	0.193	2.621		0.8	1	30.011			
T5	317.80	4338.02	A	0.191	2.628	35	0.8	1	35.610	4202.64	210.13	C
60.00-40.00			B	0.191	2.628		0.8	1	35.610			
			C	0.191	2.628		0.8	1	35.610			
T6	317.80	4970.69	A	0.172	2.691	37	0.8	1	37.602	4678.12	233.91	C

Section Elevation ft	Add Weight lb	Self Weight lb	Face	e	C_F	q_z psf	D_F	D_R	A_E ft^2	F lb	w plf	Ctrl. Face
40.00-20.00			B	0.172	2.691		0.8	1	37.602			
			C	0.172	2.691		0.8	1	37.602			
T7 20.00-0.00	238.35	5630.76	A	0.168	2.706	44	0.8	1	41.815	5493.33	274.67	C
			B	0.168	2.706		0.8	1	41.815			
			C	0.168	2.706		0.8	1	41.815			
Sum Weight:	1785.81	25405.81						OTM	1430.99 kip-ft	25294.45		

Tower Forces - No Ice - Wind 90 To Face

Section Elevation ft	Add Weight lb	Self Weight lb	Face	e	C_F	q_z psf	D_F	D_R	A_E ft^2	F lb	w plf	Ctrl. Face
T1	112.54	1284.96	A	0.139	2.812	37	0.85	1	13.274	1887.83	94.39	C
140.00-120.00			B	0.139	2.812		0.85	1	13.274			
			C	0.139	2.812		0.85	1	13.274			
T2	208.60	1928.30	A	0.149	2.775	36	0.85	1	13.838	2146.25	107.31	C
120.00-100.00			B	0.149	2.775		0.85	1	13.838			
			C	0.149	2.775		0.85	1	13.838			
T3	284.80	3383.47	A	0.228	2.505	35	0.85	1	30.210	3472.02	173.60	C
100.00-80.00			B	0.228	2.505		0.85	1	30.210			
			C	0.228	2.505		0.85	1	30.210			
T4	305.92	3869.62	A	0.193	2.621	35	0.85	1	31.886	3787.88	189.39	C
80.00-60.00			B	0.193	2.621		0.85	1	31.886			
			C	0.193	2.621		0.85	1	31.886			
T5	317.80	4338.02	A	0.191	2.628	35	0.85	1	37.835	4378.66	218.93	C
60.00-40.00			B	0.191	2.628		0.85	1	37.835			
			C	0.191	2.628		0.85	1	37.835			
T6	317.80	4970.69	A	0.172	2.691	37	0.85	1	39.952	4879.03	243.95	C
40.00-20.00			B	0.172	2.691		0.85	1	39.952			
			C	0.172	2.691		0.85	1	39.952			
T7 20.00-0.00	238.35	5630.76	A	0.168	2.706	44	0.85	1	44.428	5756.35	287.82	C
			B	0.168	2.706		0.85	1	44.428			
			C	0.168	2.706		0.85	1	44.428			
Sum Weight:	1785.81	25405.81						OTM	1482.01 kip-ft	26308.03		

Tower Forces - With Ice - Wind Normal To Face

Section Elevation ft	Add Weight lb	Self Weight lb	Face	e	C_F	q_z psf	D_F	D_R	A_E ft^2	F lb	w plf	Ctrl. Face
T1	2036.04	4591.20	A	0.416	2.034	7	1	1	40.210	1016.84	50.84	C
140.00-120.00			B	0.416	2.034		1	1	40.210			
			C	0.416	2.034		1	1	40.210			
T2	2799.37	5046.23	A	0.403	2.057	7	1	1	38.843	1155.81	57.79	C
120.00-100.00			B	0.403	2.057		1	1	38.843			

Section Elevation ft	Add Weight lb	Self Weight lb	Face	e	C_F	q_z psf	D_F	D_R	A_E ft^2	F lb	w plf	Ctrl. Face
			C	0.403	2.057		1	1	38.843			
T3	3586.85	7428.00	A	0.432	2.003	7	1	1	61.530	1537.61	76.88	C
100.00-80.00			B	0.432	2.003		1	1	61.530			
			C	0.432	2.003		1	1	61.530			
T4	4072.09	8140.19	A	0.369	2.129	7	1	1	63.993	1752.76	87.64	C
80.00-60.00			B	0.369	2.129		1	1	63.993			
			C	0.369	2.129		1	1	63.993			
T5	4344.53	9624.02	A	0.357	2.155	7	1	1	73.638	1969.83	98.49	C
60.00-40.00			B	0.357	2.155		1	1	73.638			
			C	0.357	2.155		1	1	73.638			
T6	4376.96	10523.98	A	0.311	2.267	7	1	1	74.750	2150.79	107.54	C
40.00-20.00			B	0.311	2.267		1	1	74.750			
			C	0.311	2.267		1	1	74.750			
T7 20.00-0.00	3264.60	11990.52	A	0.3	2.295	9	1	1	81.867	2331.51	116.58	C
			B	0.3	2.295		1	1	81.867			
			C	0.3	2.295		1	1	81.867			
Sum Weight:	24480.43	57344.15						OTM	706.74 kip-ft	11915.16		

Tower Forces - With Ice - Wind 45 To Face

Section Elevation ft	Add Weight lb	Self Weight lb	Face	e	C_F	q_z psf	D_F	D_R	A_E ft^2	F lb	w plf	Ctrl. Face
T1	2036.04	4591.20	A	0.416	2.034	7	0.825	1	38.254	992.03	49.60	C
140.00-120.00			B	0.416	2.034		0.825	1	38.254			
			C	0.416	2.034		0.825	1	38.254			
T2	2799.37	5046.23	A	0.403	2.057	7	0.825	1	37.065	1133.58	56.68	C
120.00-100.00			B	0.403	2.057		0.825	1	37.065			
			C	0.403	2.057		0.825	1	37.065			
T3	3586.85	7428.00	A	0.432	2.003	7	0.825	1	53.674	1444.09	72.20	C
100.00-80.00			B	0.432	2.003		0.825	1	53.674			
			C	0.432	2.003		0.825	1	53.674			
T4	4072.09	8140.19	A	0.369	2.129	7	0.825	1	55.810	1650.54	82.53	C
80.00-60.00			B	0.369	2.129		0.825	1	55.810			
			C	0.369	2.129		0.825	1	55.810			
T5	4344.53	9624.02	A	0.357	2.155	7	0.825	1	64.239	1849.63	92.48	C
60.00-40.00			B	0.357	2.155		0.825	1	64.239			
			C	0.357	2.155		0.825	1	64.239			
T6	4376.96	10523.98	A	0.311	2.267	7	0.825	1	64.905	2010.99	100.55	C
40.00-20.00			B	0.311	2.267		0.825	1	64.905			
			C	0.311	2.267		0.825	1	64.905			
T7 20.00-0.00	3264.60	11990.52	A	0.3	2.295	9	0.825	1	71.107	2150.44	107.52	C
			B	0.3	2.295		0.825	1	71.107			
			C	0.3	2.295		0.825	1	71.107			
Sum Weight:	24480.43	57344.15						OTM	673.48 kip-ft	11231.29		

Tower Forces - With Ice - Wind 60 To Face

Section Elevation ft	Add Weight lb	Self Weight lb	Face	e	C_F	q_z psf	D_F	D_R	A_E ft²	F lb	w plf	Ctrl. Face
T1	2036.04	4591.20	A	0.416	2.034	7	0.8	1	37.975	988.49	49.42	C
140.00-120.00			B	0.416	2.034		0.8	1	37.975			
			C	0.416	2.034		0.8	1	37.975			
T2	2799.37	5046.23	A	0.403	2.057	7	0.8	1	36.811	1130.40	56.52	C
120.00-100.00			B	0.403	2.057		0.8	1	36.811			
			C	0.403	2.057		0.8	1	36.811			
T3	3586.85	7428.00	A	0.432	2.003	7	0.8	1	52.551	1430.73	71.54	C
100.00-80.00			B	0.432	2.003		0.8	1	52.551			
			C	0.432	2.003		0.8	1	52.551			
T4	4072.09	8140.19	A	0.369	2.129	7	0.8	1	54.641	1635.93	81.80	C
80.00-60.00			B	0.369	2.129		0.8	1	54.641			
			C	0.369	2.129		0.8	1	54.641			
T5	4344.53	9624.02	A	0.357	2.155	7	0.8	1	62.896	1832.46	91.62	C
60.00-40.00			B	0.357	2.155		0.8	1	62.896			
			C	0.357	2.155		0.8	1	62.896			
T6	4376.96	10523.98	A	0.311	2.267	7	0.8	1	63.499	1991.01	99.55	C
40.00-20.00			B	0.311	2.267		0.8	1	63.499			
			C	0.311	2.267		0.8	1	63.499			
T7 20.00-0.00	3264.60	11990.52	A	0.3	2.295	9	0.8	1	69.570	2124.58	106.23	C
			B	0.3	2.295		0.8	1	69.570			
			C	0.3	2.295		0.8	1	69.570			
Sum Weight:	24480.43	57344.15						OTM	668.73 kip-ft	11133.59		

Tower Forces - With Ice - Wind 90 To Face

Section Elevation ft	Add Weight lb	Self Weight lb	Face	e	C_F	q_z psf	D_F	D_R	A_E ft²	F lb	w plf	Ctrl. Face
T1	2036.04	4591.20	A	0.416	2.034	7	0.85	1	38.534	995.57	49.78	C
140.00-120.00			B	0.416	2.034		0.85	1	38.534			
			C	0.416	2.034		0.85	1	38.534			
T2	2799.37	5046.23	A	0.403	2.057	7	0.85	1	37.319	1136.75	56.84	C
120.00-100.00			B	0.403	2.057		0.85	1	37.319			
			C	0.403	2.057		0.85	1	37.319			
T3	3586.85	7428.00	A	0.432	2.003	7	0.85	1	54.796	1457.45	72.87	C
100.00-80.00			B	0.432	2.003		0.85	1	54.796			
			C	0.432	2.003		0.85	1	54.796			
T4	4072.09	8140.19	A	0.369	2.129	7	0.85	1	56.979	1665.14	83.26	C
80.00-60.00			B	0.369	2.129		0.85	1	56.979			
			C	0.369	2.129		0.85	1	56.979			
T5	4344.53	9624.02	A	0.357	2.155	7	0.85	1	65.581	1866.80	93.34	C
60.00-40.00			B	0.357	2.155		0.85	1	65.581			
			C	0.357	2.155		0.85	1	65.581			
T6	4376.96	10523.98	A	0.311	2.267	7	0.85	1	66.312	2030.96	101.55	C
40.00-20.00			B	0.311	2.267		0.85	1	66.312			
			C	0.311	2.267		0.85	1	66.312			
T7 20.00-0.00	3264.60	11990.52	A	0.3	2.295	9	0.85	1	72.644	2176.31	108.82	C
			B	0.3	2.295		0.85	1	72.644			
			C	0.3	2.295		0.85	1	72.644			

Section Elevation ft	Add Weight lb	Self Weight lb	Face	e	C_F	q_z psf	D_F	D_R	A_E ft^2	F lb	w plf	Ctrl. Face
Sum Weight:	24480.43	57344.15						OTM	678.23 kip-ft	11328.99		

Tower Forces - Service - Wind Normal To Face

Section Elevation ft	Add Weight lb	Self Weight lb	Face	e	C_F	q_z psf	D_F	D_R	A_E ft^2	F lb	w plf	Ctrl. Face
T1	112.54	1284.96	A	0.139	2.812	11	1	1	14.950	578.37	28.92	C
140.00-120.00			B	0.139	2.812		1	1	14.950			
			C	0.139	2.812		1	1	14.950			
T2	208.60	1928.30	A	0.149	2.775	10	1	1	15.361	646.42	32.32	C
120.00-100.00			B	0.149	2.775		1	1	15.361			
			C	0.149	2.775		1	1	15.361			
T3	284.80	3383.47	A	0.228	2.505	10	1	1	35.541	1100.13	55.01	C
100.00-80.00			B	0.228	2.505		1	1	35.541			
			C	0.228	2.505		1	1	35.541			
T4	305.92	3869.62	A	0.193	2.621	10	1	1	37.513	1200.15	60.01	C
80.00-60.00			B	0.193	2.621		1	1	37.513			
			C	0.193	2.621		1	1	37.513			
T5	317.80	4338.02	A	0.191	2.628	10	1	1	44.512	1393.21	69.66	C
60.00-40.00			B	0.191	2.628		1	1	44.512			
			C	0.191	2.628		1	1	44.512			
T6	317.80	4970.69	A	0.172	2.691	11	1	1	47.002	1556.48	77.82	C
40.00-20.00			B	0.172	2.691		1	1	47.002			
			C	0.172	2.691		1	1	47.002			
T7 20.00-0.00	238.35	5630.76	A	0.168	2.706	12	1	1	52.268	1858.51	92.93	C
			B	0.168	2.706		1	1	52.268			
			C	0.168	2.706		1	1	52.268			
Sum Weight:	1785.81	25405.81						OTM	464.26 kip-ft	8333.28		

Tower Forces - Service - Wind 45 To Face

Section Elevation ft	Add Weight lb	Self Weight lb	Face	e	C_F	q_z psf	D_F	D_R	A_E ft^2	F lb	w plf	Ctrl. Face
T1	112.54	1284.96	A	0.139	2.812	11	0.825	1	12.995	528.97	26.45	C
140.00-120.00			B	0.139	2.812		0.825	1	12.995			
			C	0.139	2.812		0.825	1	12.995			
T2	208.60	1928.30	A	0.149	2.775	10	0.825	1	13.584	603.24	30.16	C
120.00-100.00			B	0.149	2.775		0.825	1	13.584			
			C	0.149	2.775		0.825	1	13.584			
T3	284.80	3383.47	A	0.228	2.505	10	0.825	1	29.322	966.80	48.34	C
100.00-80.00			B	0.228	2.505		0.825	1	29.322			
			C	0.228	2.505		0.825	1	29.322			
T4	305.92	3869.62	A	0.193	2.621	10	0.825	1	30.948	1054.76	52.74	C

Section Elevation ft	Add Weight lb	Self Weight lb	Face	e	C_F	q_z psf	D_F	D_R	A_E ft^2	F lb	w plf	Ctrl. Face
80.00-60.00			B	0.193	2.621		0.825	1	30.948			
			C	0.193	2.621		0.825	1	30.948			
T5	317.80	4338.02	A	0.191	2.628	10	0.825	1	36.723	1218.29	60.91	C
60.00-40.00			B	0.191	2.628		0.825	1	36.723			
			C	0.191	2.628		0.825	1	36.723			
T6	317.80	4970.69	A	0.172	2.691	11	0.825	1	38.777	1356.83	67.84	C
40.00-20.00			B	0.172	2.691		0.825	1	38.777			
			C	0.172	2.691		0.825	1	38.777			
T7 20.00-0.00	238.35	5630.76	A	0.168	2.706	12	0.825	1	43.121	1597.11	79.86	C
			B	0.168	2.706		0.825	1	43.121			
			C	0.168	2.706		0.825	1	43.121			
Sum Weight:	1785.81	25405.81						OTM	413.56 kip-ft	7326.00		

Tower Forces - Service - Wind 60 To Face

Section Elevation ft	Add Weight lb	Self Weight lb	Face	e	C_F	q_z psf	D_F	D_R	A_E ft^2	F lb	w plf	Ctrl. Face
T1	112.54	1284.96	A	0.139	2.812	11	0.8	1	12.716	521.92	26.10	C
140.00-120.00			B	0.139	2.812		0.8	1	12.716			
			C	0.139	2.812		0.8	1	12.716			
T2	208.60	1928.30	A	0.149	2.775	10	0.8	1	13.330	597.07	29.85	C
120.00-100.00			B	0.149	2.775		0.8	1	13.330			
			C	0.149	2.775		0.8	1	13.330			
T3	284.80	3383.47	A	0.228	2.505	10	0.8	1	28.433	947.75	47.39	C
100.00-80.00			B	0.228	2.505		0.8	1	28.433			
			C	0.228	2.505		0.8	1	28.433			
T4	305.92	3869.62	A	0.193	2.621	10	0.8	1	30.011	1033.99	51.70	C
80.00-60.00			B	0.193	2.621		0.8	1	30.011			
			C	0.193	2.621		0.8	1	30.011			
T5	317.80	4338.02	A	0.191	2.628	10	0.8	1	35.610	1193.30	59.66	C
60.00-40.00			B	0.191	2.628		0.8	1	35.610			
			C	0.191	2.628		0.8	1	35.610			
T6	317.80	4970.69	A	0.172	2.691	11	0.8	1	37.602	1328.30	66.42	C
40.00-20.00			B	0.172	2.691		0.8	1	37.602			
			C	0.172	2.691		0.8	1	37.602			
T7 20.00-0.00	238.35	5630.76	A	0.168	2.706	12	0.8	1	41.815	1559.77	77.99	C
			B	0.168	2.706		0.8	1	41.815			
			C	0.168	2.706		0.8	1	41.815			
Sum Weight:	1785.81	25405.81						OTM	406.32 kip-ft	7182.10		

Tower Forces - Service - Wind 90 To Face

Section Elevation ft	Add Weight lb	Self Weight lb	Face	e	C_F	q_z psf	D_F	D_R	A_E ft²	F lb	w plf	Ctrl. Face
T1	112.54	1284.96	A	0.139	2.812	11	0.85	1	13.274	536.03	26.80	C
140.00-120.00			B	0.139	2.812		0.85	1	13.274			
			C	0.139	2.812		0.85	1	13.274			
T2	208.60	1928.30	A	0.149	2.775	10	0.85	1	13.838	609.41	30.47	C
120.00-100.00			B	0.149	2.775		0.85	1	13.838			
			C	0.149	2.775		0.85	1	13.838			
T3	284.80	3383.47	A	0.228	2.505	10	0.85	1	30.210	985.85	49.29	C
100.00-80.00			B	0.228	2.505		0.85	1	30.210			
			C	0.228	2.505		0.85	1	30.210			
T4	305.92	3869.62	A	0.193	2.621	10	0.85	1	31.886	1075.53	53.78	C
80.00-60.00			B	0.193	2.621		0.85	1	31.886			
			C	0.193	2.621		0.85	1	31.886			
T5	317.80	4338.02	A	0.191	2.628	10	0.85	1	37.835	1243.28	62.16	C
60.00-40.00			B	0.191	2.628		0.85	1	37.835			
			C	0.191	2.628		0.85	1	37.835			
T6	317.80	4970.69	A	0.172	2.691	11	0.85	1	39.952	1385.35	69.27	C
40.00-20.00			B	0.172	2.691		0.85	1	39.952			
			C	0.172	2.691		0.85	1	39.952			
T7 20.00-0.00	238.35	5630.76	A	0.168	2.706	12	0.85	1	44.428	1634.46	81.72	C
			B	0.168	2.706		0.85	1	44.428			
			C	0.168	2.706		0.85	1	44.428			
Sum Weight:	1785.81	25405.81						OTM	420.80 kip-ft	7469.89		

Discrete Appurtenance Pressures - No Ice $G_H = 0.850$

Description	Aiming Azimuth °	Weight lb	$Offset_x$ ft	$Offset_z$ ft	z ft	K_z	q_z psf	C_AA_C Front ft²	C_AA_C Side ft²
DB438	0.0000	7.00	0.00	0.00	60.00	1.137	35	0.77	0.23
531-70 Dipole	120.0000	40.00	9.14	5.28	65.00	1.156	35	3.23	2.63
5' Side-Arm	0.0000	140.00	0.00	0.00	65.00	1.156	35	10.60	10.60
PR-950	240.0000	38.00	-4.52	2.61	80.00	1.208	35	6.35	6.35
2'6"x4" Pipe Mount	0.0000	27.00	0.00	0.00	80.00	1.208	35	0.63	0.63
DB222-A	120.0000	16.00	7.45	4.30	82.00	1.214	35	1.60	1.60
4' Side Mount Standoff	0.0000	50.00	0.00	0.00	81.00	1.211	35	2.72	2.72
DB438	120.0000	7.00	4.38	2.53	83.00	1.217	35	0.77	0.23
DB586-Y (inverted)	240.0000	8.25	-8.56	4.94	95.00	1.252	36	1.01	1.01
6' Side Mount Standoff	0.0000	70.00	0.00	0.00	102.00	1.271	36	4.97	4.97
432E-83I-01T TTA Unit	240.0000	25.00	-5.72	3.30	102.00	1.271	36	2.85	0.97
DB586-Y	240.0000	8.25	-8.32	4.80	108.00	1.286	36	1.01	1.01
DB224-A	0.0000	32.00	0.00	-4.11	106.00	1.281	36	3.15	3.15
DB222-A (inverted)	180.0000	16.00	0.00	8.42	97.00	1.258	36	1.60	1.60
8' Side Arm	165.0000	325.00	3.13	1.80	102.00	1.271	36	17.20	17.20
8' Side Arm	195.0000	325.00	-3.13	1.80	102.00	1.271	36	17.20	17.20
SC479-HF1LDF (inverted)	180.0000	30.00	0.00	8.32	107.00	1.284	36	5.06	5.06
8' Side Arm	165.0000	325.00	3.13	1.80	118.00	1.310	37	17.20	17.20
8' Side Arm	195.0000	325.00	-3.13	1.80	118.00	1.310	37	17.20	17.20
8' Side Arm	45.0000	325.00	0.00	-3.61	118.00	1.310	37	17.20	17.20
8' Side Arm	75.0000	325.00	3.13	1.80	118.00	1.310	37	17.20	17.20
6' Side-Arm	0.0000	140.00	0.00	0.00	125.00	1.326	37	10.60	10.60
2'6"x4" Pipe Mount	0.0000	27.00	0.00	-4.11	132.50	1.343	37	0.62	0.62
2'6"x4" Pipe Mount	240.0000	27.00	-3.56	2.05	134.50	1.347	37	0.62	0.62

Description	Aiming Azimuth °	Weight lb	$Offset_x$ ft	$Offset_z$ ft	z ft	K_z	q_z psf	C_AA_C Front ft^2	C_AA_C Side ft^2
Flash Beacon Lighting	0.0000	50.00	0.00	0.00	140.00	1.359	38	2.70	2.70
Lightning Rod 1"x10'	0.0000	40.00	0.00	0.00	156.00	1.390	38	1.00	1.00
L-810 Obstruction Lighting (1)	0.0000	6.65	0.00	-8.27	70.00	1.174	35	0.29	0.29
L-810 Obstruction Lighting (1)	240.0000	6.65	-7.17	4.14	70.00	1.174	35	0.29	0.29
WPA-70063-2CF Panel Antenna	300.0000	30.00	-4.16	-2.40	143.00	1.365	38	2.22	1.45
432E-83I-01T TTA Unit	300.0000	25.00	-4.16	-2.40	140.00	1.359	38	2.85	0.97
WPA-70063-2CF Panel Antenna	300.0000	30.00	-4.16	-2.40	137.00	1.352	38	2.22	1.45
6' Side-Arm	0.0000	140.00	0.00	0.00	140.00	1.359	38	10.60	10.60
WPA-70063-2CF Panel Antenna	180.0000	30.00	0.00	4.80	137.00	1.352	38	2.22	1.45
SE419-SWBP2LDF(D00) Panel	180.0000	30.00	0.00	4.80	140.00	1.359	38	4.15	9.89
432E-83I-01T TTA Unit	180.0000	25.00	0.00	1.80	140.00	1.359	38	2.85	0.97
6' Side-Arm (PSA6 - SitePro1)	0.0000	280.00	0.00	0.00	140.00	1.359	38	21.20	21.20
SC479-HF1LDF (D00I-E6085)	60.0000	30.00	4.16	-2.40	134.00	1.346	37	5.06	5.06
SC479-HF1LDF (D00I-E6085)	60.0000	30.00	7.19	-4.15	134.00	1.346	37	5.06	5.06
6'x4.5" OD Pipe Mount	300.0000	70.00	-1.56	-0.90	134.00	1.346	37	1.50	1.50
6'x4.5" OD Pipe Mount	300.0000	70.00	-1.56	-0.90	140.00	1.359	38	1.50	1.50
6'x4.5" OD Pipe Mount	180.0000	70.00	0.00	1.80	140.00	1.359	38	1.50	1.50
Commscope SF-QV12-B Mount Frame	0.0000	415.00	0.00	-4.11	112.00	1.296	36	17.06	8.28
Commscope SF-QV12-B Mount Frame	120.0000	415.00	3.56	2.05	112.00	1.296	36	17.06	8.28
Commscope SF-QV12-B Mount Frame	240.0000	415.00	-3.56	2.05	112.00	1.296	36	17.06	8.28
RFS APXVAARR24_43-U-NA20 Panel Antenna	0.0000	153.30	0.00	-5.11	112.00	1.296	36	20.24	8.89
RFS APXVAARR24_43-U-NA20 Panel Antenna	120.0000	153.30	4.42	2.55	112.00	1.296	36	20.24	8.89
RFS APXVAARR24_43-U-NA20 Panel Antenna	240.0000	153.30	-4.42	2.55	112.00	1.296	36	20.24	8.89
Ericsson 4449 B71 + B12 Radio Unit	0.0000	80.00	0.00	-4.36	112.00	1.296	36	1.66	1.16
Ericsson 4449 B71 + B12 Radio Unit	120.0000	80.00	3.77	2.18	112.00	1.296	36	1.66	1.16
Ericsson 4449 B71 + B12 Radio Unit	240.0000	80.00	-3.77	2.18	112.00	1.296	36	1.66	1.16
Ericsson Radio 4415 B25 RRH Unit	0.0000	50.00	0.00	-4.36	112.00	1.296	36	1.86	0.83
Ericsson Radio 4415 B25 RRH Unit	120.0000	50.00	3.77	2.18	112.00	1.296	36	1.86	0.83
Ericsson Radio 4415 B25 RRH Unit	240.0000	50.00	-3.77	2.18	112.00	1.296	36	1.86	0.83
Ericsson Radio 4415 B66A RRH	0.0000	70.00	0.00	-4.36	112.00	1.296	36	1.64	1.35
Ericsson Radio 4415 B66A RRH	120.0000	70.00	3.77	2.18	112.00	1.296	36	1.64	1.35
Ericsson Radio 4415 B66A RRH	240.0000	70.00	-3.77	2.18	112.00	1.296	36	1.64	1.35
	Sum Weight:	5926.70							

Discrete Appurtenance Pressures - With Ice $G_H = 0.850$

Description	Aiming Azimuth °	Weight lb	$Offset_x$ ft	$Offset_z$ ft	z ft	K_z	q_z psf	C_AA_C Front ft^2	C_AA_C Side ft^2	t_z in
DB438	0.0000	41.97	0.00	0.00	60.00	1.137	7	1.61	1.53	2.1050
531-70 Dipole	120.0000	204.37	9.14	5.28	65.00	1.156	7	10.60	9.99	2.0619
5' Side-Arm	0.0000	436.91	0.00	0.00	65.00	1.156	7	30.39	30.39	2.0619
PR-950	240.0000	86.00	-4.52	2.61	80.00	1.208	7	27.74	27.74	2.1051
2'6"x4" Pipe Mount	0.0000	78.72	0.00	0.00	80.00	1.208	7	1.52	1.52	2.1051
DB222-A	120.0000	35.98	7.45	4.30	82.00	1.214	7	6.93	6.93	2.0808
4' Side Mount Standoff	0.0000	212.10	0.00	0.00	81.00	1.211	7	11.82	11.82	2.0782
DB438	120.0000	41.11	4.38	2.53	83.00	1.217	7	1.60	1.52	2.0833
DB586-Y (inverted)	240.0000	66.80	-8.56	4.94	95.00	1.252	7	2.22	2.22	2.1116
6' Side Mount Standoff	0.0000	323.47	0.00	0.00	102.00	1.271	7	9.83	9.83	2.1122
432E-83I-01T TTA Unit	240.0000	131.15	-5.72	3.30	102.00	1.271	7	3.79	1.61	2.1122
DB586-Y	240.0000	67.50	-8.32	4.80	108.00	1.286	7	2.22	2.22	2.1243
DB224-A	0.0000	72.71	0.00	-4.11	106.00	1.281	7	13.84	13.84	2.1204
DB222-A (inverted)	180.0000	36.31	0.00	8.42	97.00	1.258	7	7.02	7.02	2.1160
8' Side Arm	165.0000	853.05	3.13	1.80	102.00	1.271	7	48.04	48.04	2.1122
8' Side Arm	195.0000	853.05	-3.13	1.80	102.00	1.271	7	48.04	48.04	2.1122
SC479-HF1LDF (inverted)	180.0000	255.74	0.00	8.32	107.00	1.284	7	11.03	11.03	2.1223
8' Side Arm	165.0000	860.80	3.13	1.80	118.00	1.310	7	48.49	48.49	2.1432
8' Side Arm	195.0000	860.80	-3.13	1.80	118.00	1.310	7	48.49	48.49	2.1432
8' Side Arm	45.0000	860.80	0.00	-3.61	118.00	1.310	7	48.49	48.49	2.1432
8' Side Arm	75.0000	860.80	3.13	1.80	118.00	1.310	7	48.49	48.49	2.1432
6' Side-Arm	0.0000	449.39	0.00	0.00	125.00	1.326	7	31.23	31.23	2.1485
2'6"x4" Pipe Mount	0.0000	81.20	0.00	-4.11	132.50	1.343	7	1.54	1.54	2.1611
2'6"x4" Pipe Mount	240.0000	81.34	-3.56	2.05	134.50	1.347	7	1.54	1.54	2.1643
Flash Beacon Lighting	0.0000	136.92	0.00	0.00	140.00	1.359	7	4.44	4.44	2.1730
Lightning Rod 1"x10'	0.0000	134.04	0.00	0.00	156.00	1.390	8	5.40	5.40	2.1967
L-810 Obstruction Lighting (1)	0.0000	44.41	0.00	-8.27	70.00	1.174	7	1.03	1.03	2.0772
L-810 Obstruction Lighting (1)	240.0000	44.41	-7.17	4.14	70.00	1.174	7	1.03	1.03	2.0772
WPA-70063-2CF Panel Antenna	300.0000	153.72	-4.16	-2.40	143.00	1.365	7	3.15	2.85	2.1776
432E-83I-01T TTA Unit	300.0000	135.85	-4.16	-2.40	140.00	1.359	7	3.82	1.63	2.1730
WPA-70063-2CF Panel Antenna	300.0000	152.81	-4.16	-2.40	137.00	1.352	7	3.15	2.84	2.1683
6' Side-Arm	0.0000	452.92	0.00	0.00	140.00	1.359	7	31.46	31.46	2.1730
WPA-70063-2CF Panel Antenna	180.0000	152.81	0.00	4.80	137.00	1.352	7	3.15	2.84	2.1683
SE419-SWBP2LDF(D00) Panel	180.0000	312.40	0.00	4.80	140.00	1.359	7	7.57	13.36	2.1730
432E-83I-01T TTA Unit	180.0000	135.85	0.00	1.80	140.00	1.359	7	3.82	1.63	2.1730
6' Side-Arm (PSA6 - SitePro1)	0.0000	905.83	0.00	0.00	140.00	1.359	7	62.92	62.92	2.1730
SC479-HF1LDF (D00I-E6085)	60.0000	263.08	4.16	-2.40	134.00	1.346	7	11.11	11.11	2.1635
SC479-HF1LDF (D00I-E6085)	60.0000	263.08	7.19	-4.15	134.00	1.346	7	11.11	11.11	2.1635
6'x4.5" OD Pipe Mount	300.0000	201.22	-1.56	-0.90	134.00	1.346	7	4.43	4.43	2.1635
6'x4.5" OD Pipe Mount	300.0000	202.15	-1.56	-0.90	140.00	1.359	7	4.44	4.44	2.1730
6'x4.5" OD Pipe Mount	180.0000	202.15	0.00	1.80	140.00	1.359	7	4.44	4.44	2.1730
Commscope SF-QV12-B Mount Frame	0.0000	1503.79	0.00	-4.11	112.00	1.296	7	44.07	22.92	2.1321
Commscope SF-QV12-B Mount Frame	120.0000	1503.79	3.56	2.05	112.00	1.296	7	44.07	22.92	2.1321

Description	Aiming Azimuth °	Weight lb	$Offset_x$ ft	$Offset_z$ ft	z ft	K_z	q_z psf	C_AA_C Front ft^2	C_AA_C Side ft^2	t_z in
Commscope SF-QV12-B Mount Frame	240.0000	1503.79	-3.56	2.05	112.00	1.296	7	44.07	22.92	2.1321
RFS APXVAARR24_43-U-NA20 Panel Antenna	0.0000	698.43	0.00	-5.11	112.00	1.296	7	23.06	11.49	2.1321
RFS APXVAARR24_43-U-NA20 Panel Antenna	120.0000	698.43	4.42	2.55	112.00	1.296	7	23.06	11.49	2.1321
RFS APXVAARR24_43-U-NA20 Panel Antenna	240.0000	698.43	-4.42	2.55	112.00	1.296	7	23.06	11.49	2.1321
Ericsson 4449 B71 + B12 Radio Unit	0.0000	169.90	0.00	-4.36	112.00	1.296	7	2.40	1.80	2.1321
Ericsson 4449 B71 + B12 Radio Unit	120.0000	169.90	3.77	2.18	112.00	1.296	7	2.40	1.80	2.1321
Ericsson 4449 B71 + B12 Radio Unit	240.0000	169.90	-3.77	2.18	112.00	1.296	7	2.40	1.80	2.1321
Ericsson Radio 4415 B25 RRH Unit	0.0000	131.05	0.00	-4.36	112.00	1.296	7	2.64	1.43	2.1321
Ericsson Radio 4415 B25 RRH Unit	120.0000	131.05	3.77	2.18	112.00	1.296	7	2.64	1.43	2.1321
Ericsson Radio 4415 B25 RRH Unit	240.0000	131.05	-3.77	2.18	112.00	1.296	7	2.64	1.43	2.1321
Ericsson Radio 4415 B66A RRH	0.0000	168.77	0.00	-4.36	112.00	1.296	7	2.38	2.04	2.1321
Ericsson Radio 4415 B66A RRH	120.0000	168.77	3.77	2.18	112.00	1.296	7	2.38	2.04	2.1321
Ericsson Radio 4415 B66A RRH	240.0000	168.77	-3.77	2.18	112.00	1.296	7	2.38	2.04	2.1321
	Sum Weight:	19761.58								

Discrete Appurtenance Pressures - Service $G_H = 0.850$

Description	Aiming Azimuth °	Weight lb	$Offset_x$ ft	$Offset_z$ ft	z ft	K_z	q_z psf	C_AA_C Front ft^2	C_AA_C Side ft^2
DB438	0.0000	7.00	0.00	0.00	60.00	1.137	10	0.77	0.23
531-70 Dipole	120.0000	40.00	9.14	5.28	65.00	1.156	10	3.23	2.63
5' Side-Arm	0.0000	140.00	0.00	0.00	65.00	1.156	10	10.60	10.60
PR-950	240.0000	38.00	-4.52	2.61	80.00	1.208	10	6.35	6.35
2'6"x4" Pipe Mount	0.0000	27.00	0.00	0.00	80.00	1.208	10	0.63	0.63
DB222-A	120.0000	16.00	7.45	4.30	82.00	1.214	10	1.60	1.60
4' Side Mount Standoff	0.0000	50.00	0.00	0.00	81.00	1.211	10	2.72	2.72
DB438	120.0000	7.00	4.38	2.53	83.00	1.217	10	0.77	0.23
DB586-Y (inverted)	240.0000	8.25	-8.56	4.94	95.00	1.252	10	1.01	1.01
6' Side Mount Standoff	0.0000	70.00	0.00	0.00	102.00	1.271	10	4.97	4.97
432E-83I-01T TTA Unit	240.0000	25.00	-5.72	3.30	102.00	1.271	10	2.85	0.97
DB586-Y	240.0000	8.25	-8.32	4.80	108.00	1.286	10	1.01	1.01
DB224-A	0.0000	32.00	0.00	-4.11	106.00	1.281	10	3.15	3.15
DB222-A (inverted)	180.0000	16.00	0.00	8.42	97.00	1.258	10	1.60	1.60
8' Side Arm	165.0000	325.00	3.13	1.80	102.00	1.271	10	17.20	17.20
8' Side Arm	195.0000	325.00	-3.13	1.80	102.00	1.271	10	17.20	17.20
SC479-HF1LDF (inverted)	180.0000	30.00	0.00	8.32	107.00	1.284	10	5.06	5.06
8' Side Arm	165.0000	325.00	3.13	1.80	118.00	1.310	10	17.20	17.20
8' Side Arm	195.0000	325.00	-3.13	1.80	118.00	1.310	10	17.20	17.20
8' Side Arm	45.0000	325.00	0.00	-3.61	118.00	1.310	10	17.20	17.20

Description	Aiming Azimuth °	Weight lb	$Offset_x$ ft	$Offset_z$ ft	z ft	K_z	q_z psf	C_AA_C Front ft^2	C_AA_C Side ft^2
8' Side Arm	75.0000	325.00	3.13	1.80	118.00	1.310	10	17.20	17.20
6' Side-Arm	0.0000	140.00	0.00	0.00	125.00	1.326	10	10.60	10.60
2'6"x4" Pipe Mount	0.0000	27.00	0.00	-4.11	132.50	1.343	11	0.62	0.62
2'6"x4" Pipe Mount	240.0000	27.00	-3.56	2.05	134.50	1.347	11	0.62	0.62
Flash Beacon Lighting	0.0000	50.00	0.00	0.00	140.00	1.359	11	2.70	2.70
Lightning Rod 1"x10'	0.0000	40.00	0.00	0.00	156.00	1.390	11	1.00	1.00
L-810 Obstruction Lighting (1)	0.0000	6.65	0.00	-8.27	70.00	1.174	10	0.29	0.29
L-810 Obstruction Lighting (1)	240.0000	6.65	-7.17	4.14	70.00	1.174	10	0.29	0.29
WPA-70063-2CF Panel Antenna	300.0000	30.00	-4.16	-2.40	143.00	1.365	11	2.22	1.45
432E-83I-01T TTA Unit	300.0000	25.00	-4.16	-2.40	140.00	1.359	11	2.85	0.97
WPA-70063-2CF Panel Antenna	300.0000	30.00	-4.16	-2.40	137.00	1.352	11	2.22	1.45
6' Side-Arm	0.0000	140.00	0.00	0.00	140.00	1.359	11	10.60	10.60
WPA-70063-2CF Panel Antenna	180.0000	30.00	0.00	4.80	137.00	1.352	11	2.22	1.45
SE419-SWBP2LDF(D00) Panel	180.0000	30.00	0.00	4.80	140.00	1.359	11	4.15	9.89
432E-83I-01T TTA Unit	180.0000	25.00	0.00	1.80	140.00	1.359	11	2.85	0.97
6' Side-Arm (PSA6 - SitePro1)	0.0000	280.00	0.00	0.00	140.00	1.359	11	21.20	21.20
SC479-HF1LDF (D00I-E6085)	60.0000	30.00	4.16	-2.40	134.00	1.346	11	5.06	5.06
SC479-HF1LDF (D00I-E6085)	60.0000	30.00	7.19	-4.15	134.00	1.346	11	5.06	5.06
6'x4.5" OD Pipe Mount	300.0000	70.00	-1.56	-0.90	134.00	1.346	11	1.50	1.50
6'x4.5" OD Pipe Mount	300.0000	70.00	-1.56	-0.90	140.00	1.359	11	1.50	1.50
6'x4.5" OD Pipe Mount	180.0000	70.00	0.00	1.80	140.00	1.359	11	1.50	1.50
Commscope SF-QV12-B Mount Frame	0.0000	415.00	0.00	-4.11	112.00	1.296	10	17.06	8.28
Commscope SF-QV12-B Mount Frame	120.0000	415.00	3.56	2.05	112.00	1.296	10	17.06	8.28
Commscope SF-QV12-B Mount Frame	240.0000	415.00	-3.56	2.05	112.00	1.296	10	17.06	8.28
RFS APXVAARR24_43-U-NA20 Panel Antenna	0.0000	153.30	0.00	-5.11	112.00	1.296	10	20.24	8.89
RFS APXVAARR24_43-U-NA20 Panel Antenna	120.0000	153.30	4.42	2.55	112.00	1.296	10	20.24	8.89
RFS APXVAARR24_43-U-NA20 Panel Antenna	240.0000	153.30	-4.42	2.55	112.00	1.296	10	20.24	8.89
Ericsson 4449 B71 + B12 Radio Unit	0.0000	80.00	0.00	-4.36	112.00	1.296	10	1.66	1.16
Ericsson 4449 B71 + B12 Radio Unit	120.0000	80.00	3.77	2.18	112.00	1.296	10	1.66	1.16
Ericsson 4449 B71 + B12 Radio Unit	240.0000	80.00	-3.77	2.18	112.00	1.296	10	1.66	1.16
Ericsson Radio 4415 B25 RRH Unit	0.0000	50.00	0.00	-4.36	112.00	1.296	10	1.86	0.83
Ericsson Radio 4415 B25 RRH Unit	120.0000	50.00	3.77	2.18	112.00	1.296	10	1.86	0.83
Ericsson Radio 4415 B25 RRH Unit	240.0000	50.00	-3.77	2.18	112.00	1.296	10	1.86	0.83
Ericsson Radio 4415 B66A RRH	0.0000	70.00	0.00	-4.36	112.00	1.296	10	1.64	1.35
Ericsson Radio 4415 B66A RRH	120.0000	70.00	3.77	2.18	112.00	1.296	10	1.64	1.35

Description	Aiming Azimuth °	Weight lb	$Offset_x$ ft	$Offset_z$ ft	z ft	K_z	q_z psf	C_AA_C Front ft^2	C_AA_C Side ft^2
Ericsson Radio 4415 B66A RRH	240.0000	70.00	-3.77	2.18	112.00	1.296	10	1.64	1.35
	Sum Weight:	5926.70							

Dish Pressures - No Ice

Elevation ft	Dish Description	Aiming Azimuth °	Weight lb	$Offset_x$ ft	$Offset_z$ ft	K_z	A_A ft^2	q_z psf
132.50	6' Dish w/ Radome (PA6-65)	0.0000	240.00	0.00	-4.11	1.343	28.27	37
134.50	6' Dish w/ Radome (PA6-65)	240.0000	240.00	-3.56	2.05	1.347	28.27	37
134.50	Commscope PAR6-59W-PXA/A	300.0000	310.00	-2.00	-1.15	1.347	28.27	37
		Sum Weight:	790.00					

Dish Pressures - With Ice

Elevation ft	Dish Description	Aiming Azimuth °	Weight lb	$Offset_x$ ft	$Offset_z$ ft	K_z	A_A ft^2	q_z psf	t_z in
132.50	6' Dish w/ Radome (PA6-65)	0.0000	412.89	0.00	-4.11	1.343	31.04	7	1.7289
134.50	6' Dish w/ Radome (PA6-65)	240.0000	413.15	-3.56	2.05	1.347	31.04	7	1.7315
134.50	Commscope PAR6-59W-PXA/A	300.0000	829.44	-2.00	-1.15	1.347	31.02	7	1.7315
		Sum Weight:	1655.48						

Dish Pressures - Service

Elevation ft	Dish Description	Aiming Azimuth °	Weight lb	$Offset_x$ ft	$Offset_z$ ft	K_z	A_A ft^2	q_z psf
132.50	6' Dish w/ Radome (PA6-65)	0.0000	240.00	0.00	-4.11	1.343	28.27	11
134.50	6' Dish w/ Radome (PA6-65)	240.0000	240.00	-3.56	2.05	1.347	28.27	11
134.50	Commscope PAR6-59W-PXA/A	300.0000	310.00	-2.00	-1.15	1.347	28.27	11
		Sum Weight:	790.00					

Force Totals

Load Case	Vertical Forces lb	Sum of Forces X lb	Sum of Forces Z lb	Sum of Overturning Moments, M_x kip-ft	Sum of Overturning Moments, M_z kip-ft	Sum of Torques kip-ft
Leg Weight	17656.71					
Bracing Weight	7749.11					
Total Member Self-Weight	25405.81			-0.95	2.21	

Load Case	Vertical Forces lb	Sum of Forces X lb	Sum of Forces Z lb	Sum of Overturning Moments, M_x kip-ft	Sum of Overturning Moments, M_z kip-ft	Sum of Torques kip-ft
Total Weight	33908.32			-0.95	2.21	
Wind 0 deg - No Ice		-37.41	-41557.25	-3080.98	7.40	-17.65
Wind 30 deg - No Ice		19325.80	-33337.58	-2533.19	-1469.70	-19.15
Wind 45 deg - No Ice		26991.82	-26850.49	-2048.93	-2064.03	-17.95
Wind 60 deg - No Ice		32632.90	-18719.08	-1434.43	-2508.22	-15.53
Wind 90 deg - No Ice		38716.40	37.41	4.24	-2950.60	-7.74
Wind 120 deg - No Ice		36181.44	20811.03	1543.56	-2690.14	2.12
Wind 135 deg - No Ice		28478.15	28336.81	2126.52	-2143.53	7.00
Wind 150 deg - No Ice		19390.60	33375.00	2536.48	-1478.70	11.41
Wind 180 deg - No Ice		37.41	37502.95	2875.01	-2.99	17.65
Wind 210 deg - No Ice		-19325.80	33337.58	2531.29	1474.11	19.15
Wind 225 deg - No Ice		-26991.82	26850.49	2047.02	2068.45	17.95
Wind 240 deg - No Ice		-36144.03	20746.23	1534.56	2689.36	15.53
Wind 270 deg - No Ice		-38716.40	-37.41	-6.15	2955.02	7.74
Wind 300 deg - No Ice		-32670.31	-18783.88	-1443.43	2517.83	-2.12
Wind 315 deg - No Ice		-27044.73	-26903.40	-2056.28	2075.80	-7.00
Wind 330 deg - No Ice		-19390.60	-33375.00	-2538.39	1483.11	-11.41
Member Ice	31938.34					
Total Weight Ice	103241.64			-25.93	46.65	
Wind 0 deg - Ice		-3.75	-17313.19	-1356.92	47.27	-12.00
Wind 30 deg - Ice		8379.39	-14484.15	-1153.61	-606.54	-12.97
Wind 45 deg - Ice		11783.10	-11756.06	-943.13	-874.06	-12.13
Wind 60 deg - Ice		14348.06	-8262.57	-671.89	-1077.09	-10.47
Wind 90 deg - Ice		16765.27	3.75	-25.32	-1260.79	-5.15
Wind 120 deg - Ice		15028.66	8659.84	640.10	-1110.62	1.54
Wind 135 deg - Ice		12064.73	12037.68	905.58	-888.36	4.84
Wind 150 deg - Ice		8385.88	14487.90	1102.36	-607.60	7.82
Wind 180 deg - Ice		3.75	16531.63	1267.05	46.04	12.00
Wind 210 deg - Ice		-8379.39	14484.15	1101.75	699.85	12.97
Wind 225 deg - Ice		-11783.10	11756.06	891.27	967.37	12.13
Wind 240 deg - Ice		-15024.92	8653.35	639.04	1203.32	10.47
Wind 270 deg - Ice		-16765.27	-3.75	-26.54	1354.10	5.15
Wind 300 deg - Ice		-14351.81	-8269.06	-672.95	1171.01	-1.54
Wind 315 deg - Ice		-11788.40	-11761.36	-944.00	968.23	-4.84
Wind 330 deg - Ice		-8385.88	-14487.90	-1154.22	700.91	-7.82
Total Weight	33908.32			-0.95	2.21	
Wind 0 deg - Service		-10.62	-11799.75	-872.97	2.25	-5.01
Wind 30 deg - Service		5487.36	-9465.86	-717.43	-417.16	-5.44
Wind 45 deg - Service		7664.05	-7623.92	-579.93	-585.92	-5.10
Wind 60 deg - Service		9265.78	-5315.09	-405.45	-712.04	-4.41
Wind 90 deg - Service		10993.12	10.62	3.05	-837.65	-2.20
Wind 120 deg - Service		10273.35	5909.08	440.12	-763.69	0.60
Wind 135 deg - Service		8086.08	8045.94	605.64	-608.49	1.99
Wind 150 deg - Service		5505.76	9476.49	722.05	-419.72	3.24
Wind 180 deg - Service		10.62	10648.58	818.17	-0.70	5.01
Wind 210 deg - Service		-5487.36	9465.86	720.57	418.70	5.44
Wind 225 deg - Service		-7664.05	7623.92	583.07	587.46	5.10
Wind 240 deg - Service		-10262.72	5890.68	437.56	763.76	4.41
Wind 270 deg - Service		-10993.12	-10.62	0.09	839.19	2.20
Wind 300 deg - Service		-9276.40	-5333.49	-408.01	715.06	-0.60
Wind 315 deg - Service		-7679.07	-7638.94	-582.02	589.55	-1.99
Wind 330 deg - Service		-5505.76	-9476.49	-718.91	421.26	-3.24

Load Combinations

Comb. No.	Description
1	Dead Only
2	1.2 Dead+1.6 Wind 0 deg - No Ice
3	0.9 Dead+1.6 Wind 0 deg - No Ice
4	1.2 Dead+1.6 Wind 30 deg - No Ice
5	0.9 Dead+1.6 Wind 30 deg - No Ice
6	1.2 Dead+1.6 Wind 45 deg - No Ice
7	0.9 Dead+1.6 Wind 45 deg - No Ice
8	1.2 Dead+1.6 Wind 60 deg - No Ice
9	0.9 Dead+1.6 Wind 60 deg - No Ice
10	1.2 Dead+1.6 Wind 90 deg - No Ice
11	0.9 Dead+1.6 Wind 90 deg - No Ice
12	1.2 Dead+1.6 Wind 120 deg - No Ice
13	0.9 Dead+1.6 Wind 120 deg - No Ice
14	1.2 Dead+1.6 Wind 135 deg - No Ice
15	0.9 Dead+1.6 Wind 135 deg - No Ice
16	1.2 Dead+1.6 Wind 150 deg - No Ice
17	0.9 Dead+1.6 Wind 150 deg - No Ice
18	1.2 Dead+1.6 Wind 180 deg - No Ice
19	0.9 Dead+1.6 Wind 180 deg - No Ice
20	1.2 Dead+1.6 Wind 210 deg - No Ice
21	0.9 Dead+1.6 Wind 210 deg - No Ice
22	1.2 Dead+1.6 Wind 225 deg - No Ice
23	0.9 Dead+1.6 Wind 225 deg - No Ice
24	1.2 Dead+1.6 Wind 240 deg - No Ice
25	0.9 Dead+1.6 Wind 240 deg - No Ice
26	1.2 Dead+1.6 Wind 270 deg - No Ice
27	0.9 Dead+1.6 Wind 270 deg - No Ice
28	1.2 Dead+1.6 Wind 300 deg - No Ice
29	0.9 Dead+1.6 Wind 300 deg - No Ice
30	1.2 Dead+1.6 Wind 315 deg - No Ice
31	0.9 Dead+1.6 Wind 315 deg - No Ice
32	1.2 Dead+1.6 Wind 330 deg - No Ice
33	0.9 Dead+1.6 Wind 330 deg - No Ice
34	1.2 Dead+1.0 Ice
35	1.2 Dead+1.0 Wind 0 deg+1.0 Ice
36	1.2 Dead+1.0 Wind 30 deg+1.0 Ice
37	1.2 Dead+1.0 Wind 45 deg+1.0 Ice
38	1.2 Dead+1.0 Wind 60 deg+1.0 Ice
39	1.2 Dead+1.0 Wind 90 deg+1.0 Ice
40	1.2 Dead+1.0 Wind 120 deg+1.0 Ice
41	1.2 Dead+1.0 Wind 135 deg+1.0 Ice
42	1.2 Dead+1.0 Wind 150 deg+1.0 Ice
43	1.2 Dead+1.0 Wind 180 deg+1.0 Ice
44	1.2 Dead+1.0 Wind 210 deg+1.0 Ice
45	1.2 Dead+1.0 Wind 225 deg+1.0 Ice
46	1.2 Dead+1.0 Wind 240 deg+1.0 Ice
47	1.2 Dead+1.0 Wind 270 deg+1.0 Ice
48	1.2 Dead+1.0 Wind 300 deg+1.0 Ice
49	1.2 Dead+1.0 Wind 315 deg+1.0 Ice
50	1.2 Dead+1.0 Wind 330 deg+1.0 Ice
51	Dead+Wind 0 deg - Service
52	Dead+Wind 30 deg - Service
53	Dead+Wind 45 deg - Service
54	Dead+Wind 60 deg - Service
55	Dead+Wind 90 deg - Service
56	Dead+Wind 120 deg - Service
57	Dead+Wind 135 deg - Service
58	Dead+Wind 150 deg - Service
59	Dead+Wind 180 deg - Service
60	Dead+Wind 210 deg - Service
61	Dead+Wind 225 deg - Service
62	Dead+Wind 240 deg - Service

Comb. No.	Description
63	Dead+Wind 270 deg - Service
64	Dead+Wind 300 deg - Service
65	Dead+Wind 315 deg - Service
66	Dead+Wind 330 deg - Service

Maximum Member Forces

Section No.	Elevation ft	Component Type	Condition	Gov. Load Comb.	Axial lb	Major Axis Moment kip-ft	Minor Axis Moment kip-ft
T1	140 - 120	Leg	Max Tension	29	22584.26	-0.82	-0.52
			Max. Compression	24	-24675.96	0.78	-0.55
			Max. Mx	12	-6615.64	-0.91	-0.67
			Max. My	2	-6953.97	-0.14	1.10
			Max. Vy	25	1282.59	0.34	0.11
			Max. Vx	2	1402.60	0.18	0.08
		Diagonal	Max Tension	4	5078.90	0.00	0.00
			Max. Compression	20	-5097.17	0.00	0.00
			Max. Mx	46	1062.37	0.03	-0.00
			Max. My	2	2965.96	0.01	0.01
			Max. Vy	46	-32.49	0.03	-0.00
			Max. Vx	2	2.35	0.00	0.00
		Top Girt	Max Tension	13	184.09	0.00	0.00
			Max. Compression	28	-206.68	0.00	0.00
			Max. Mx	34	-53.84	-0.08	0.00
			Max. Vy	34	53.03	0.00	0.00
T2	120 - 100	Leg	Max Tension	29	83642.97	-1.57	-0.98
			Max. Compression	12	-91747.20	-1.96	-0.87
			Max. Mx	26	27694.56	2.25	0.34
			Max. My	2	-50322.08	-0.14	2.50
			Max. Vy	10	1451.60	-2.06	-0.76
			Max. Vx	2	-1602.09	-0.14	2.50
		Diagonal	Max Tension	5	10141.05	0.00	0.00
			Max. Compression	20	-10202.18	0.00	0.00
			Max. Mx	14	6683.21	0.05	0.01
			Max. My	20	9325.10	0.02	-0.01
			Max. Vy	45	-36.66	0.04	-0.00
			Max. Vx	20	-3.53	0.00	0.00
T3	100 - 80	Leg	Max Tension	29	141899.98	0.97	-0.06
			Max. Compression	12	-155164.21	2.10	-0.05
			Max. Mx	13	-109772.45	2.14	-0.06
			Max. My	32	-5671.77	-0.01	1.43
			Max. Vy	13	-923.64	2.14	-0.06
			Max. Vx	32	-504.36	-0.01	1.43
		Diagonal	Max Tension	4	7404.93	0.00	0.00
			Max. Compression	4	-7387.15	0.00	0.00
			Max. Mx	48	1419.78	0.04	0.01
			Max. My	2	-7031.78	-0.00	0.01
			Max. Vy	48	39.77	0.04	0.01
			Max. Vx	43	2.21	0.00	0.00
		Top Girt	Max Tension	25	721.31	0.00	0.00
			Max. Compression	28	-822.97	0.00	0.00
			Max. Mx	34	-205.83	-0.08	0.00
			Max. My	34	-215.96	0.00	0.00
			Max. Vy	34	-51.47	0.00	0.00
			Max. Vx	34	-1.43	0.00	0.00
T4	80 - 60	Leg	Max Tension	29	189598.82	0.79	-0.05
			Max. Compression	12	-209334.44	1.92	-0.04
			Max. Mx	12	-182679.43	1.94	-0.05

Section No.	Elevation ft	Component Type	Condition	Gov. Load Comb.	Axial lb	Major Axis Moment kip-ft	Minor Axis Moment kip-ft
			Max. My	16	-6027.64	-0.00	-1.04
			Max. Vy	13	-700.06	1.94	-0.05
			Max. Vx	3	-341.90	-0.96	0.96
		Diagonal	Max Tension	4	8137.47	0.00	0.00
			Max. Compression	4	-8164.25	0.00	0.00
			Max. Mx	48	1557.07	0.06	0.01
			Max. My	35	-2146.47	0.05	0.01
			Max. Vy	48	51.65	0.06	0.01
			Max. Vx	35	-2.65	0.00	0.00
T5	60 - 40	Leg	Max Tension	29	234672.39	0.81	-0.04
			Max. Compression	12	-261918.60	2.50	-0.07
			Max. Mx	13	-259700.48	2.50	-0.07
			Max. My	16	-7744.39	-0.03	-2.15
			Max. Vy	13	-814.41	2.50	-0.07
			Max. Vx	3	-607.29	-1.28	2.07
		Diagonal	Max Tension	4	8930.20	0.00	0.00
			Max. Compression	4	-8950.29	0.00	0.00
			Max. Mx	48	1634.37	0.09	0.01
			Max. My	44	-2401.83	0.08	-0.01
			Max. Vy	48	68.61	0.09	0.01
			Max. Vx	44	3.45	0.00	0.00
T6	40 - 20	Leg	Max Tension	29	272237.63	3.81	-0.04
			Max. Compression	12	-306782.35	1.86	-0.04
			Max. Mx	12	-306161.23	-4.50	0.04
			Max. My	32	-11575.88	-0.16	3.06
			Max. Vy	12	-1603.70	2.60	0.00
			Max. Vx	32	-804.94	-0.16	3.06
		Diagonal	Max Tension	5	12444.58	0.07	-0.00
			Max. Compression	20	-12689.92	0.00	0.00
			Max. Mx	49	2423.41	0.17	0.02
			Max. My	35	1979.38	0.17	0.03
			Max. Vy	49	98.74	0.17	0.02
			Max. Vx	35	-5.73	0.00	0.00
		Secondary Horizontal	Max Tension	26	1183.18	0.00	0.00
			Max. Compression	27	-1109.55	0.00	0.00
			Max. Mx	35	131.62	0.11	0.01
			Max. My	48	-130.48	0.11	0.02
			Max. Vy	35	-80.90	0.11	0.01
			Max. Vx	48	-4.18	0.00	0.00
T7	20 - 0	Leg	Max Tension	29	315999.85	3.95	-0.02
			Max. Compression	12	-360331.07	3.26	-0.02
			Max. Mx	12	-359680.26	-4.79	0.02
			Max. My	32	-13808.82	-0.17	3.59
			Max. Vy	12	-1641.78	2.41	0.00
			Max. Vx	26	965.63	-0.17	-3.57
		Diagonal	Max Tension	5	14030.60	0.13	-0.02
			Max. Compression	2	-14611.59	0.00	0.00
			Max. Mx	47	2606.48	0.26	-0.04
			Max. My	35	2162.92	0.26	0.04
			Max. Vy	47	135.49	0.26	-0.04
			Max. Vx	35	-8.25	0.00	0.00
		Secondary Horizontal	Max Tension	26	1322.93	0.00	0.00
			Max. Compression	27	-1237.47	0.00	0.00
			Max. Mx	50	187.70	0.15	0.01
			Max. My	49	-137.92	0.14	0.01
			Max. Vy	50	-91.99	0.15	0.01
			Max. Vx	49	-3.52	0.00	0.00

Maximum Reactions

Location	Condition	Gov. Load Comb.	Vertical lb	Horizontal, X lb	Horizontal, Z lb
Leg C	Max. Vert	24	374120.66	34414.61	-20915.97
	Max. H_x	24	374120.66	34414.61	-20915.97
	Max. H_z	7	-317382.39	-28377.88	18960.84
	Min. Vert	9	-326400.04	-29739.13	18210.88
	Min. H_x	9	-326400.04	-29739.13	18210.88
	Min. H_z	24	374120.66	34414.61	-20915.97
Leg B	Max. Vert	12	374834.62	-34985.01	-20055.18
	Max. H_x	29	-327698.71	30315.13	17359.79
	Max. H_z	31	-318801.96	29173.59	17745.16
	Min. Vert	29	-327698.71	30315.13	17359.79
	Min. H_x	12	374834.62	-34985.01	-20055.18
	Min. H_z	12	374834.62	-34985.01	-20055.18
Leg A	Max. Vert	2	372346.35	-1030.67	40138.65
	Max. H_x	25	-168590.87	5409.35	-18771.05
	Max. H_z	2	372346.35	-1030.67	40138.65
	Min. Vert	19	-324699.45	1025.08	-34738.16
	Min. H_x	10	13041.51	-5138.96	971.06
	Min. H_z	19	-324699.45	1025.08	-34738.16

Tower Mast Reaction Summary

Load Combination	Vertical lb	$Shear_x$ lb	$Shear_z$ lb	Overturning Moment, M_x kip-ft	Overturning Moment, M_z kip-ft	Torque kip-ft
Dead Only	33908.32	0.00	0.00	-0.95	2.21	0.00
1.2 Dead+1.6 Wind 0 deg - No Ice	40689.99	-59.86	-66491.60	-4929.19	10.96	-28.23
0.9 Dead+1.6 Wind 0 deg - No Ice	30517.49	-59.86	-66491.60	-4928.90	10.30	-28.23
1.2 Dead+1.6 Wind 30 deg - No Ice	40689.99	30921.28	-53340.13	-4052.73	-2352.40	-30.65
0.9 Dead+1.6 Wind 30 deg - No Ice	30517.49	30921.28	-53340.13	-4052.44	-2353.06	-30.65
1.2 Dead+1.6 Wind 45 deg - No Ice	40689.99	43186.92	-42960.78	-3277.90	-3303.33	-28.72
0.9 Dead+1.6 Wind 45 deg - No Ice	30517.49	43186.92	-42960.78	-3277.62	-3304.00	-28.72
1.2 Dead+1.6 Wind 60 deg - No Ice	40689.99	52212.64	-29950.52	-2294.71	-4014.04	-24.85
0.9 Dead+1.6 Wind 60 deg - No Ice	30517.49	52212.64	-29950.52	-2294.43	-4014.70	-24.85
1.2 Dead+1.6 Wind 90 deg - No Ice	40689.99	61946.25	59.86	7.17	-4721.84	-12.39
0.9 Dead+1.6 Wind 90 deg - No Ice	30517.49	61946.25	59.86	7.46	-4722.51	-12.39
1.2 Dead+1.6 Wind 120 deg - No Ice	40689.99	57890.31	33297.64	2470.08	-4305.11	3.39
0.9 Dead+1.6 Wind 120 deg - No Ice	30517.49	57890.31	33297.64	2470.36	-4305.77	3.39
1.2 Dead+1.6 Wind 135 deg - No Ice	40689.99	45565.03	45338.90	3402.81	-3430.53	11.21

Load Combination	Vertical lb	$Shear_x$ lb	$Shear_z$ lb	Overturning Moment, M_x kip-ft	Overturning Moment, M_z kip-ft	Torque kip-ft
0.9 Dead+1.6 Wind 135 deg - No Ice	30517.49	45565.03	45338.90	3403.09	-3431.19	11.21
1.2 Dead+1.6 Wind 150 deg - No Ice	40689.99	31024.96	53399.99	4058.75	-2366.80	18.26
0.9 Dead+1.6 Wind 150 deg - No Ice	30517.49	31024.96	53399.99	4059.04	-2367.46	18.26
1.2 Dead+1.6 Wind 180 deg - No Ice	40689.99	59.86	60004.72	4600.39	-5.66	28.23
0.9 Dead+1.6 Wind 180 deg - No Ice	30517.49	59.86	60004.72	4600.68	-6.33	28.23
1.2 Dead+1.6 Wind 210 deg - No Ice	40689.99	-30921.28	53340.13	4050.44	2357.70	30.65
0.9 Dead+1.6 Wind 210 deg - No Ice	30517.49	-30921.28	53340.13	4050.72	2357.04	30.65
1.2 Dead+1.6 Wind 225 deg - No Ice	40689.99	-43186.92	42960.78	3275.62	3308.63	28.72
0.9 Dead+1.6 Wind 225 deg - No Ice	30517.49	-43186.92	42960.78	3275.90	3307.97	28.72
1.2 Dead+1.6 Wind 240 deg - No Ice	40689.99	-57830.45	33193.96	2455.68	4302.10	24.85
0.9 Dead+1.6 Wind 240 deg - No Ice	30517.49	-57830.45	33193.96	2455.96	4301.43	24.85
1.2 Dead+1.6 Wind 270 deg - No Ice	40689.99	-61946.25	-59.86	-9.46	4727.14	12.39
0.9 Dead+1.6 Wind 270 deg - No Ice	30517.49	-61946.25	-59.86	-9.17	4726.48	12.39
1.2 Dead+1.6 Wind 300 deg - No Ice	40689.99	-52272.50	-30054.20	-2309.11	4027.65	-3.39
0.9 Dead+1.6 Wind 300 deg - No Ice	30517.49	-52272.50	-30054.20	-2308.83	4026.99	-3.39
1.2 Dead+1.6 Wind 315 deg - No Ice	40689.99	-43271.57	-43045.44	-3289.66	3320.39	-11.21
0.9 Dead+1.6 Wind 315 deg - No Ice	30517.49	-43271.57	-43045.44	-3289.38	3319.73	-11.21
1.2 Dead+1.6 Wind 330 deg - No Ice	40689.99	-31024.96	-53399.99	-4061.04	2372.10	-18.26
0.9 Dead+1.6 Wind 330 deg - No Ice	30517.49	-31024.96	-53399.99	-4060.75	2371.43	-18.26
1.2 Dead+1.0 Ice	110023.31	0.00	0.00	-26.12	47.10	0.00
1.2 Dead+1.0 Wind 0 deg+1.0 Ice	110023.31	-3.75	-17313.19	-1357.11	47.71	-12.00
1.2 Dead+1.0 Wind 30 deg+1.0 Ice	110023.31	8379.39	-14484.15	-1153.80	-606.10	-12.97
1.2 Dead+1.0 Wind 45 deg+1.0 Ice	110023.31	11783.10	-11756.06	-943.32	-873.62	-12.13
1.2 Dead+1.0 Wind 60 deg+1.0 Ice	110023.31	14348.06	-8262.57	-672.08	-1076.65	-10.47
1.2 Dead+1.0 Wind 90 deg+1.0 Ice	110023.31	16765.27	3.75	-25.51	-1260.35	-5.15
1.2 Dead+1.0 Wind 120 deg+1.0 Ice	110023.31	15028.66	8659.84	639.91	-1110.18	1.54
1.2 Dead+1.0 Wind 135 deg+1.0 Ice	110023.31	12064.73	12037.68	905.39	-887.92	4.84
1.2 Dead+1.0 Wind 150 deg+1.0 Ice	110023.31	8385.88	14487.90	1102.17	-607.16	7.82
1.2 Dead+1.0 Wind 180 deg+1.0 Ice	110023.31	3.75	16531.63	1266.86	46.48	12.00
1.2 Dead+1.0 Wind 210 deg+1.0 Ice	110023.31	-8379.39	14484.15	1101.56	700.29	12.97
1.2 Dead+1.0 Wind 225 deg+1.0 Ice	110023.31	-11783.10	11756.06	891.08	967.81	12.13

Load Combination	Vertical lb	$Shear_x$ lb	$Shear_z$ lb	Overturning Moment, M_x kip-ft	Overturning Moment, M_z kip-ft	Torque kip-ft
1.2 Dead+1.0 Wind 240 deg+1.0 Ice	110023.31	-15024.92	8653.35	638.84	1203.76	10.47
1.2 Dead+1.0 Wind 270 deg+1.0 Ice	110023.31	-16765.27	-3.75	-26.73	1354.54	5.15
1.2 Dead+1.0 Wind 300 deg+1.0 Ice	110023.31	-14351.81	-8269.06	-673.14	1171.46	-1.54
1.2 Dead+1.0 Wind 315 deg+1.0 Ice	110023.31	-11788.40	-11761.36	-944.19	968.67	-4.84
1.2 Dead+1.0 Wind 330 deg+1.0 Ice	110023.31	-8385.88	-14487.90	-1154.41	701.35	-7.82
Dead+Wind 0 deg - Service	33908.32	-10.62	-11799.75	-875.50	3.68	-5.01
Dead+Wind 30 deg - Service	33908.32	5487.36	-9465.86	-719.96	-415.72	-5.44
Dead+Wind 45 deg - Service	33908.32	7664.05	-7623.92	-582.45	-584.48	-5.10
Dead+Wind 60 deg - Service	33908.32	9265.77	-5315.09	-407.98	-710.60	-4.41
Dead+Wind 90 deg - Service	33908.32	10993.12	10.62	0.52	-836.21	-2.20
Dead+Wind 120 deg - Service	33908.32	10273.35	5909.08	437.59	-762.26	0.60
Dead+Wind 135 deg - Service	33908.32	8086.07	8045.94	603.12	-607.05	1.99
Dead+Wind 150 deg - Service	33908.32	5505.76	9476.49	719.52	-418.28	3.24
Dead+Wind 180 deg - Service	33908.32	10.62	10648.58	815.65	0.73	5.01
Dead+Wind 210 deg - Service	33908.32	-5487.36	9465.86	718.05	420.14	5.44
Dead+Wind 225 deg - Service	33908.32	-7664.05	7623.92	580.55	588.90	5.10
Dead+Wind 240 deg - Service	33908.32	-10262.72	5890.68	435.04	765.20	4.41
Dead+Wind 270 deg - Service	33908.32	-10993.12	-10.62	-2.43	840.63	2.20
Dead+Wind 300 deg - Service	33908.32	-9276.40	-5333.49	-410.53	716.49	-0.60
Dead+Wind 315 deg - Service	33908.32	-7679.07	-7638.94	-584.54	590.98	-1.99
Dead+Wind 330 deg - Service	33908.32	-5505.76	-9476.49	-721.43	422.70	-3.24

Solution Summary

	Sum of Applied Forces			Sum of Reactions			
Load Comb.	PX lb	PY lb	PZ lb	PX lb	PY lb	PZ lb	% Error
1	0.00	-33908.32	0.00	-0.00	33908.32	-0.00	0.000%
2	-59.86	-40689.99	-66491.60	59.86	40689.99	66491.60	0.000%
3	-59.86	-30517.49	-66491.60	59.86	30517.49	66491.60	0.000%
4	30921.28	-40689.99	-53340.13	-30921.28	40689.99	53340.13	0.000%
5	30921.28	-30517.49	-53340.13	-30921.28	30517.49	53340.13	0.000%
6	43186.92	-40689.99	-42960.78	-43186.92	40689.99	42960.78	0.000%
7	43186.92	-30517.49	-42960.78	-43186.92	30517.49	42960.78	0.000%
8	52212.64	-40689.99	-29950.52	-52212.64	40689.99	29950.52	0.000%
9	52212.64	-30517.49	-29950.52	-52212.64	30517.49	29950.52	0.000%
10	61946.25	-40689.99	59.86	-61946.25	40689.99	-59.86	0.000%
11	61946.25	-30517.49	59.86	-61946.25	30517.49	-59.86	0.000%
12	57890.31	-40689.99	33297.64	-57890.31	40689.99	-33297.64	0.000%
13	57890.31	-30517.49	33297.64	-57890.31	30517.49	-33297.64	0.000%
14	45565.03	-40689.99	45338.90	-45565.03	40689.99	-45338.90	0.000%
15	45565.03	-30517.49	45338.90	-45565.03	30517.49	-45338.90	0.000%
16	31024.96	-40689.99	53399.99	-31024.96	40689.99	-53399.99	0.000%
17	31024.96	-30517.49	53399.99	-31024.96	30517.49	-53399.99	0.000%
18	59.86	-40689.99	60004.72	-59.86	40689.99	-60004.72	0.000%
19	59.86	-30517.49	60004.72	-59.86	30517.49	-60004.72	0.000%
20	-30921.28	-40689.99	53340.13	30921.28	40689.99	-53340.13	0.000%
21	-30921.28	-30517.49	53340.13	30921.28	30517.49	-53340.13	0.000%
22	-43186.92	-40689.99	42960.78	43186.92	40689.99	-42960.78	0.000%
23	-43186.92	-30517.49	42960.78	43186.92	30517.49	-42960.78	0.000%
24	-57830.45	-40689.99	33193.96	57830.45	40689.99	-33193.96	0.000%
25	-57830.45	-30517.49	33193.96	57830.45	30517.49	-33193.96	0.000%
26	-61946.25	-40689.99	-59.86	61946.25	40689.99	59.86	0.000%

Load Comb.	Sum of Applied Forces PX lb	PY lb	PZ lb	Sum of Reactions PX lb	PY lb	PZ lb	% Error
27	-61946.25	-30517.49	-59.86	61946.25	30517.49	59.86	0.000%
28	-52272.50	-40689.99	-30054.20	52272.50	40689.99	30054.20	0.000%
29	-52272.50	-30517.49	-30054.20	52272.50	30517.49	30054.20	0.000%
30	-43271.57	-40689.99	-43045.44	43271.57	40689.99	43045.44	0.000%
31	-43271.57	-30517.49	-43045.44	43271.57	30517.49	43045.44	0.000%
32	-31024.96	-40689.99	-53399.99	31024.96	40689.99	53399.99	0.000%
33	-31024.96	-30517.49	-53399.99	31024.96	30517.49	53399.99	0.000%
34	0.00	-110023.31	0.00	-0.00	110023.31	-0.00	0.000%
35	-3.75	-110023.31	-17313.19	3.75	110023.31	17313.19	0.000%
36	8379.39	-110023.31	-14484.15	-8379.39	110023.31	14484.15	0.000%
37	11783.10	-110023.31	-11756.06	-11783.10	110023.31	11756.06	0.000%
38	14348.06	-110023.31	-8262.57	-14348.06	110023.31	8262.57	0.000%
39	16765.27	-110023.31	3.75	-16765.27	110023.31	-3.75	0.000%
40	15028.66	-110023.31	8659.84	-15028.66	110023.31	-8659.84	0.000%
41	12064.73	-110023.31	12037.68	-12064.73	110023.31	-12037.68	0.000%
42	8385.88	-110023.31	14487.90	-8385.88	110023.31	-14487.90	0.000%
43	3.75	-110023.31	16531.63	-3.75	110023.31	-16531.63	0.000%
44	-8379.39	-110023.31	14484.15	8379.39	110023.31	-14484.15	0.000%
45	-11783.10	-110023.31	11756.06	11783.10	110023.31	-11756.06	0.000%
46	-15024.92	-110023.31	8653.35	15024.92	110023.31	-8653.35	0.000%
47	-16765.27	-110023.31	-3.75	16765.27	110023.31	3.75	0.000%
48	-14351.81	-110023.31	-8269.06	14351.81	110023.31	8269.06	0.000%
49	-11788.40	-110023.31	-11761.36	11788.40	110023.31	11761.36	0.000%
50	-8385.88	-110023.31	-14487.90	8385.88	110023.31	14487.90	0.000%
51	-10.62	-33908.32	-11799.75	10.62	33908.32	11799.75	0.000%
52	5487.36	-33908.32	-9465.86	-5487.36	33908.32	9465.86	0.000%
53	7664.05	-33908.32	-7623.92	-7664.05	33908.32	7623.92	0.000%
54	9265.78	-33908.32	-5315.09	-9265.77	33908.32	5315.09	0.000%
55	10993.12	-33908.32	10.62	-10993.12	33908.32	-10.62	0.000%
56	10273.35	-33908.32	5909.08	-10273.35	33908.32	-5909.08	0.000%
57	8086.08	-33908.32	8045.94	-8086.07	33908.32	-8045.94	0.000%
58	5505.76	-33908.32	9476.49	-5505.76	33908.32	-9476.49	0.000%
59	10.62	-33908.32	10648.58	-10.62	33908.32	-10648.58	0.000%
60	-5487.36	-33908.32	9465.86	5487.36	33908.32	-9465.86	0.000%
61	-7664.05	-33908.32	7623.92	7664.05	33908.32	-7623.92	0.000%
62	-10262.72	-33908.32	5890.68	10262.72	33908.32	-5890.68	0.000%
63	-10993.12	-33908.32	-10.62	10993.12	33908.32	10.62	0.000%
64	-9276.40	-33908.32	-5333.49	9276.40	33908.32	5333.49	0.000%
65	-7679.07	-33908.32	-7638.94	7679.07	33908.32	7638.94	0.000%
66	-5505.76	-33908.32	-9476.49	5505.76	33908.32	9476.49	0.000%

Maximum Tower Deflections - Service Wind

Section No.	Elevation ft	Horz. Deflection in	Gov. Load Comb.	Tilt °	Twist °
T1	140 - 120	1.753	62	0.1040	0.0291
T2	120 - 100	1.305	62	0.0965	0.0221
T3	100 - 80	0.909	62	0.0769	0.0173
T4	80 - 60	0.596	62	0.0617	0.0118
T5	60 - 40	0.349	62	0.0457	0.0077
T6	40 - 20	0.164	62	0.0303	0.0041
T7	20 - 0	0.048	56	0.0155	0.0017

Critical Deflections and Radius of Curvature - Service Wind

Elevation ft	Appurtenance	Gov. Load Comb.	Deflection in	Tilt °	Twist °	Radius of Curvature ft
156.00	Lightning Rod 1"x10'	62	1.753	0.1040	0.0291	350169
140.00	Flash Beacon Lighting	62	1.753	0.1040	0.0291	350169
134.50	6' Dish w/ Radome (PA6-65)	62	1.628	0.1028	0.0270	318337
134.00	SC479-HF1LDF (D00I-E6085)	62	1.616	0.1027	0.0268	291809
132.50	6' Dish w/ Radome (PA6-65)	62	1.582	0.1023	0.0263	233447
128.00	SC479-HF1LDF (D00I-E6085)	62	1.481	0.1009	0.0246	145904
125.00	6' Side-Arm	62	1.414	0.0995	0.0236	116723
118.00	8' Side Arm	62	1.263	0.0949	0.0215	81669
115.00	SC479-HF1LDF (inverted)	62	1.200	0.0922	0.0208	73839
113.00	DB586-Y	62	1.158	0.0903	0.0203	69474
112.00	Commscope SF-QV12-B Mount Frame	62	1.138	0.0893	0.0201	67432
111.00	DB224-A	62	1.118	0.0883	0.0198	65506
109.67	SC479-HF1LDF (inverted)	62	1.091	0.0869	0.0195	63104
108.00	DB586-Y	62	1.058	0.0851	0.0192	60337
106.00	DB224-A	62	1.020	0.0830	0.0187	57322
104.33	SC479-HF1LDF (inverted)	62	0.988	0.0813	0.0184	55034
103.00	DB586-Y	62	0.963	0.0799	0.0181	53371
102.00	6' Side Mount Standoff	62	0.945	0.0789	0.0178	52361
101.00	DB224-A	62	0.927	0.0779	0.0176	51656
100.00	DB586-Y (inverted)	62	0.909	0.0769	0.0173	51322
99.00	SC479-HF1LDF (inverted)	62	0.891	0.0760	0.0171	51403
97.00	DB222-A (inverted)	62	0.857	0.0743	0.0166	52567
95.00	DB586-Y (inverted)	62	0.823	0.0726	0.0160	54575
92.00	DB222-A (inverted)	62	0.774	0.0703	0.0152	58118
90.00	DB586-Y (inverted)	62	0.742	0.0688	0.0146	60746
83.00	DB438	62	0.638	0.0638	0.0126	72077
82.00	DB222-A	62	0.624	0.0631	0.0124	73825
81.00	4' Side Mount Standoff	62	0.610	0.0624	0.0121	75425
80.00	PR-950	62	0.596	0.0617	0.0118	76768
70.00	L-810 Obstruction Lighting (1)	62	0.465	0.0539	0.0096	80218
69.00	531-70 Dipole	62	0.453	0.0531	0.0094	80394
65.00	531-70 Dipole	62	0.405	0.0498	0.0086	81105
61.00	531-70 Dipole	62	0.360	0.0465	0.0079	81411
60.00	DB438	62	0.349	0.0457	0.0077	81196

Maximum Tower Deflections - Design Wind

Section No.	Elevation ft	Horz. Deflection in	Gov. Load Comb.	Tilt °	Twist °
T1	140 - 120	9.863	13	0.5809	0.1642
T2	120 - 100	7.355	13	0.5423	0.1244
T3	100 - 80	5.123	13	0.4328	0.0977
T4	80 - 60	3.360	13	0.3474	0.0668
T5	60 - 40	1.970	13	0.2577	0.0432
T6	40 - 20	0.924	13	0.1710	0.0230
T7	20 - 0	0.273	13	0.0872	0.0097

Critical Deflections and Radius of Curvature - Design Wind

Elevation ft	Appurtenance	Gov. Load Comb.	Deflection in	Tilt °	Twist °	Radius of Curvature ft
156.00	Lightning Rod 1"x10'	13	9.863	0.5809	0.1642	67383
140.00	Flash Beacon Lighting	13	9.863	0.5809	0.1642	67383
134.50	6' Dish w/ Radome (PA6-65)	13	9.161	0.5756	0.1523	61257
134.00	SC479-HF1LDF (D00I-E6085)	13	9.098	0.5750	0.1512	56153
132.50	6' Dish w/ Radome (PA6-65)	13	8.907	0.5731	0.1480	44922
128.00	SC479-HF1LDF (D00I-E6085)	13	8.340	0.5657	0.1388	28076
125.00	6' Side-Arm	13	7.967	0.5588	0.1331	22461
118.00	8' Side Arm	13	7.115	0.5337	0.1213	15475
115.00	SC479-HF1LDF (inverted)	13	6.760	0.5189	0.1171	13765
113.00	DB586-Y	13	6.528	0.5080	0.1144	12827
112.00	Commscope SF-QV12-B Mount Frame	13	6.414	0.5023	0.1131	12404
111.00	DB224-A	13	6.300	0.4966	0.1118	12008
109.67	SC479-HF1LDF (inverted)	13	6.150	0.4888	0.1102	11507
108.00	DB586-Y	13	5.965	0.4789	0.1081	10919
106.00	DB224-A	13	5.747	0.4669	0.1056	10289
104.33	SC479-HF1LDF (inverted)	13	5.569	0.4571	0.1035	9818
103.00	DB586-Y	13	5.429	0.4494	0.1017	9493
102.00	6' Side Mount Standoff	13	5.326	0.4437	0.1004	9301
101.00	DB224-A	13	5.224	0.4382	0.0991	9166
100.00	DB586-Y (inverted)	13	5.123	0.4328	0.0977	9099
99.00	SC479-HF1LDF (inverted)	13	5.024	0.4277	0.0962	9110
97.00	DB222-A (inverted)	13	4.829	0.4178	0.0933	9316
95.00	DB586-Y (inverted)	13	4.639	0.4085	0.0902	9678
92.00	DB222-A (inverted)	13	4.364	0.3955	0.0854	10319
90.00	DB586-Y (inverted)	13	4.186	0.3872	0.0822	10795
83.00	DB438	13	3.597	0.3595	0.0712	12858
82.00	DB222-A	13	3.517	0.3555	0.0697	13177
81.00	4' Side Mount Standoff	13	3.438	0.3514	0.0682	13469
80.00	PR-950	13	3.360	0.3474	0.0668	13713
70.00	L-810 Obstruction Lighting (1)	13	2.623	0.3036	0.0542	14293
69.00	531-70 Dipole	13	2.554	0.2990	0.0531	14319
65.00	531-70 Dipole	13	2.286	0.2806	0.0487	14426
61.00	531-70 Dipole	13	2.032	0.2622	0.0443	14461
60.00	DB438	13	1.970	0.2577	0.0432	14419

Bolt Design Data

Section No.	Elevation ft	Component Type	Bolt Grade	Bolt Size in	Number Of Bolts	Maximum Load per Bolt lb	Allowable Load per Bolt lb	Ratio Load / Allowable	Allowable Ratio	Criteria
T1	140	Leg	A325N	1.0000	4	267.70	53014.40	0.005 ✔	1	Bolt Tension
		Diagonal	A325X	0.6250	1	5078.90	9107.81	0.558 ✔	1	Member Block Shear
		Top Girt	A325N	0.6250	1	184.09	9107.81	0.020 ✔	1	Member Block Shear
T2	120	Leg	A325N	1.0000	4	8251.87	53014.40	0.156 ✔	1	Bolt Tension
		Diagonal	A325X	0.6250	1	10141.10	12758.80	0.795 ✔	1	Member Block Shear
T3	100	Leg	A325N	1.0000	4	25342.70	53014.40	0.478 ✔	1	Bolt Tension
		Diagonal	A325X	0.6250	1	7404.93	9107.81	0.813 ✔	1	Member Block Shear

Section No.	Elevation ft	Component Type	Bolt Grade	Bolt Size in	Number Of Bolts	Maximum Load per Bolt lb	Allowable Load per Bolt lb	Ratio Load / Allowable	Allowable Ratio	Criteria
		Top Girt	A325N	0.6250	1	721.31	9107.81	0.079 ✔	1	Member Block Shear
T4	80	Leg	A325N	1.0000	4	38565.20	53014.40	0.727 ✔	1	Bolt Tension
		Diagonal	A325X	0.6250	1	8137.47	12758.80	0.638 ✔	1	Member Block Shear
T5	60	Leg	A325N	1.1250	6	33515.10	67096.30	0.500 ✔	1	Bolt Tension
		Diagonal	A325X	0.6250	1	8930.20	10440.00	0.855 ✔	1	Member Bearing
T6	40	Leg	A325N	1.1250	6	41706.80	67096.30	0.622 ✔	1	Bolt Tension
		Diagonal	A325X	0.6250	1	12444.60	14625.00	0.851 ✔	1	Member Bearing
		Secondary Horizontal	A325N	0.6250	1	1183.18	10440.00	0.113 ✔	1	Member Bearing
T7	20	Leg	A325N	1.1250	6	49048.00	67096.30	0.731 ✔	1	Bolt Tension
		Diagonal	A490N	0.6250	1	14611.60	15531.60	0.941 ✔	1	Bolt Shear
		Secondary Horizontal	A325N	0.6250	1	1322.93	10440.00	0.127 ✔	1	Member Bearing

Compression Checks

Leg Design Data (Compression)

Section No.	Elevation ft	Size	L ft	L_u ft	Kl/r	A in^2	P_u lb	ϕP_n lb	Ratio $\frac{P_u}{\phi P_n}$
T1	140 - 120	2	20.00	5.00	120.0 K=1.00	3.1416	-24676.00	49286.40	0.501 [1] ✔
T2	120 - 100	2 3/4	20.00	5.00	87.3 K=1.00	5.9396	-91747.20	153147.00	0.599 [1] ✔
T3	100 - 80	3 SR w/ (4) 2"x0.75" Bars	20.03	5.01	44.5 K=1.00	13.1159	-155164.00	510667.00	0.304 [1] ✔
T4	80 - 60	3 1/4 SR w/ (4) 2"x0.75" Bars	20.03	5.01	43.5 K=1.00	14.3394	-209334.00	561847.00	0.373 [1] ✔
T5	60 - 40	3 1/2 SR w/ (4) 2"x0.75" Bars	20.03	5.01	42.5 K=1.00	15.6616	-261919.00	617438.00	0.424 [1] ✔
T6	40 - 20	3 3/4 SR w/ (4) 2"x0.75" Bars	20.03	5.20	43.2 K=1.00	17.0824	-306782.00	670828.00	0.457 [1] ✔
T7	20 - 0	3 3/4 SR w/ (4) 2"x0.75" Bars	20.03	5.17	42.9 K=1.00	17.0824	-360331.00	671728.00	0.536 [1] ✔

[1] P_u / ϕP_n controls

Diagonal Design Data (Compression)

Section No.	Elevation ft	Size	L ft	L_u ft	Kl/r	A in^2	P_u lb	ϕP_n lb	Ratio $\frac{P_u}{\phi P_n}$
T1	140 - 120	L2x2x1/4	7.62	3.69	114.9 K=1.01	0.9380	-5097.17	15160.10	0.336 [1] ✔
T2	120 - 100	L2x2x5/16	7.62	3.69	115.2 K=1.01	1.1500	-10202.20	19590.90	0.521 [1] ✔
T3	100 - 80	L2x2x1/4	8.96	4.50	138.0 K=1.00	0.9380	-7295.61	11132.90	0.655 [1] ✔
T4	80 - 60	L2x2x5/16	10.61	5.31	163.5 K=1.00	1.1500	-8164.25	9718.34	0.840 [1] ✔
T5	60 - 40	L2 1/2x2 1/2x1/4	12.34	6.17	150.9 K=1.00	1.1900	-8910.68	11804.20	0.755 [1] ✔
T6	40 - 20	L3x3x5/16	16.37	8.36	170.3 K=1.00	1.7800	-12689.90	13866.00	0.915 [1] ✔
T7	20 - 0	L3 1/2x3 1/2x3/8	17.93	9.13	159.4 K=1.00	2.4800	-14611.60	22044.50	0.663 [1] ✔

[1] P_u / ϕP_n controls

Secondary Horizontal Design Data (Compression)

Section No.	Elevation ft	Size	L ft	L_u ft	Kl/r	A in^2	P_u lb	ϕP_n lb	Ratio $\frac{P_u}{\phi P_n}$
T6	40 - 20	L2 1/2x2 1/2x1/4	13.44	12.56	196.0 K=1.00	1.1900	-1109.55	7000.70	0.158 [1] ✔
T7	20 - 0	L2 1/2x2 1/2x1/4	14.41	13.52	211.0 K=1.00	1.1900	-1237.47	6039.40	0.205 [1] ✔

[1] P_u / ϕP_n controls

Top Girt Design Data (Compression)

Section No.	Elevation ft	Size	L ft	L_u ft	Kl/r	A in^2	P_u lb	ϕP_n lb	Ratio $\frac{P_u}{\phi P_n}$
T1	140 - 120	L2x2x1/4	6.25	5.84	179.3 K=1.00	0.9380	-206.68	6587.95	0.031 [1] ✔
T3	100 - 80	L2x2x1/4	6.25	5.78	177.4 K=1.00	0.9380	-822.97	6731.16	0.122 [1] ✔

[1] P_u / ϕP_n controls

Tension Checks

Leg Design Data (Tension)

Section No.	Elevation ft	Size	L ft	L_u ft	Kl/r	A in^2	P_u lb	ϕP_n lb	Ratio $\frac{P_u}{\phi P_n}$
T1	140 - 120	2	20.00	5.00	120.0	3.1416	22542.30	141372.00	0.159 [1] ✔
T2	120 - 100	2 3/4	20.00	5.00	87.3	5.9396	83643.00	267281.00	0.313 [1] ✔
T3	100 - 80	3 SR w/ (4) 2"x0.75" Bars	20.03	5.01	44.5	13.1159	141900.00	590216.00	0.240 [1] ✔
T4	80 - 60	3 1/4 SR w/ (4) 2"x0.75" Bars	20.03	5.01	43.5	14.3394	189566.00	645273.00	0.294 [1] ✔
T5	60 - 40	3 1/2 SR w/ (4) 2"x0.75" Bars	20.03	5.01	42.5	15.6616	234672.00	704772.00	0.333 [1] ✔
T6	40 - 20	3 3/4 SR w/ (4) 2"x0.75" Bars	20.03	5.20	43.2	17.0824	272238.00	768708.00	0.354 [1] ✔
T7	20 - 0	3 3/4 SR w/ (4) 2"x0.75" Bars	20.03	5.17	42.9	17.0824	316000.00	768708.00	0.411 [1] ✔

[1] P_u / ϕP_n controls

Diagonal Design Data (Tension)

Section No.	Elevation ft	Size	L ft	L_u ft	Kl/r	A in^2	P_u lb	ϕP_n lb	Ratio $\frac{P_u}{\phi P_n}$
T1	140 - 120	L2x2x1/4	7.62	3.69	75.1	0.5629	5078.90	24485.10	0.207 [1] ✔
T2	120 - 100	L2x2x5/16	7.62	3.69	76.1	0.6867	10141.10	33477.50	0.303 [1] ✔
T3	100 - 80	L2x2x1/4	8.18	4.11	83.4	0.5629	7404.93	24485.10	0.302 [1] ✔
T4	80 - 60	L2x2x5/16	10.61	5.31	108.5	0.6867	8137.47	33477.50	0.243 [1] ✔
T5	60 - 40	L2 1/2x2 1/2x1/4	11.90	5.96	94.8	0.7519	8930.20	32706.60	0.273 [1] ✔
T6	40 - 20	L3x3x5/16	16.37	8.36	110.3	1.1592	12444.60	56511.90	0.220 [1] ✔
T7	20 - 0	L3 1/2x3 1/2x3/8	17.93	9.13	103.7	1.6491	14030.60	80391.80	0.175 [1] ✔

[1] P_u / ϕP_n controls

Secondary Horizontal Design Data (Tension)

Section No.	Elevation ft	Size	L ft	L_u ft	Kl/r	A in^2	P_u lb	ϕP_n lb	Ratio $\frac{P_u}{\phi P_n}$
T6	40 - 20	L2 1/2x2 1/2x1/4	13.44	12.56	199.7	0.7519	1183.18	32706.60	0.036 [1] ✔
T7	20 - 0	L2 1/2x2 1/2x1/4	14.41	13.52	214.7	0.7519	1322.93	32706.60	0.040 [1] ✔

[1] P_u / ϕP_n controls

Top Girt Design Data (Tension)

Section No.	Elevation ft	Size	L ft	L_u ft	Kl/r	A in^2	P_u lb	ϕP_n lb	Ratio $\frac{P_u}{\phi P_n}$
T1	140 - 120	L2x2x1/4	6.25	5.84	119.9	0.5629	184.09	24485.10	0.008 [1] ✔
T3	100 - 80	L2x2x1/4	6.25	5.78	118.6	0.5629	721.31	24485.10	0.029 [1] ✔

[1] P_u / ϕP_n controls

Section Capacity Table

Section No.	Elevation ft	Component Type	Size	Critical Element	P lb	$øP_{allow}$ lb	% Capacity	Pass Fail
T1	140 - 120	Leg	2	1	-24676.00	49286.40	50.1	Pass
		Leg	2	2	-24336.70	49286.40	49.4	Pass
		Leg	2	3	-24246.10	49286.40	49.2	Pass
T2	120 - 100	Leg	2 3/4	31	-91336.40	153147.00	59.6	Pass
		Leg	2 3/4	32	-91747.20	153147.00	59.9	Pass
		Leg	2 3/4	33	-89996.90	153147.00	58.8	Pass
T3	100 - 80	Leg	3 SR w/ (4) 2"x0.75" Bars	58	-154660.00	510667.00	30.3 47.2 (b)	Pass
		Leg	3 SR w/ (4) 2"x0.75" Bars	59	-155164.00	510667.00	30.4 47.8 (b)	Pass
		Leg	3 SR w/ (4) 2"x0.75" Bars	60	-153064.00	510667.00	30.0 46.9 (b)	Pass
T4	80 - 60	Leg	3 1/4 SR w/ (4) 2"x0.75" Bars	88	-208741.00	561847.00	37.2 72.2 (b)	Pass
		Leg	3 1/4 SR w/ (4) 2"x0.75" Bars	89	-209334.00	561847.00	37.3 72.7 (b)	Pass
		Leg	3 1/4 SR w/ (4) 2"x0.75" Bars	90	-207032.00	561847.00	36.8 71.7 (b)	Pass
T5	60 - 40	Leg	3 1/2 SR w/ (4) 2"x0.75" Bars	115	-261272.00	617438.00	42.3 49.7 (b)	Pass
		Leg	3 1/2 SR w/ (4) 2"x0.75" Bars	116	-261919.00	617438.00	42.4 50.0 (b)	Pass
		Leg	3 1/2 SR w/ (4) 2"x0.75" Bars	117	-259532.00	617438.00	42.0 49.3 (b)	Pass
T6	40 - 20	Leg	3 3/4 SR w/ (4) 2"x0.75" Bars	142	-306118.00	670828.00	45.6 61.9 (b)	Pass
		Leg	3 3/4 SR w/ (4) 2"x0.75" Bars	143	-306782.00	670828.00	45.7	Pass

Section No.	Elevation ft	Component Type	Size	Critical Element	P lb	$øP_{allow}$ lb	% Capacity	Pass Fail
							62.2 (b)	
		Leg	3 3/4 SR w/ (4) 2"x0.75" Bars	144	-304380.00	670828.00	45.4	Pass
							61.5 (b)	
T7	20 - 0	Leg	3 3/4 SR w/ (4) 2"x0.75" Bars	163	-359635.00	671728.00	53.5	Pass
							72.8 (b)	
		Leg	3 3/4 SR w/ (4) 2"x0.75" Bars	164	-360331.00	671728.00	53.6	Pass
							73.1 (b)	
		Leg	3 3/4 SR w/ (4) 2"x0.75" Bars	165	-357879.00	671728.00	53.3	Pass
							72.4 (b)	
T1	140 - 120	Diagonal	L2x2x1/4	7	-3834.12	15160.10	25.3	Pass
							41.9 (b)	
		Diagonal	L2x2x1/4	8	-3959.98	15160.10	26.1	Pass
							42.1 (b)	
		Diagonal	L2x2x1/4	9	-3990.25	15160.10	26.3	Pass
							43.0 (b)	
		Diagonal	L2x2x1/4	10	-3781.78	15160.10	24.9	Pass
							42.0 (b)	
		Diagonal	L2x2x1/4	11	-5096.21	15160.10	33.6	Pass
							55.8 (b)	
		Diagonal	L2x2x1/4	12	-5097.17	15160.10	33.6	Pass
							55.8 (b)	
		Diagonal	L2x2x1/4	13	-3329.66	15160.10	22.0	Pass
							36.8 (b)	
		Diagonal	L2x2x1/4	14	-3328.32	15160.10	22.0	Pass
							36.6 (b)	
		Diagonal	L2x2x1/4	15	-3507.45	15160.10	23.1	Pass
							38.2 (b)	
		Diagonal	L2x2x1/4	16	-3510.50	15160.10	23.2	Pass
							39.0 (b)	
		Diagonal	L2x2x1/4	17	-4594.49	15160.10	30.3	Pass
							50.6 (b)	
		Diagonal	L2x2x1/4	18	-4593.87	15160.10	30.3	Pass
							50.5 (b)	
		Diagonal	L2x2x1/4	19	-2990.93	15160.10	19.7	Pass
							32.8 (b)	
		Diagonal	L2x2x1/4	20	-3297.94	15160.10	21.8	Pass
							35.6 (b)	
		Diagonal	L2x2x1/4	21	-2642.13	15160.10	17.4	Pass
							28.4 (b)	
		Diagonal	L2x2x1/4	22	-2398.42	15160.10	15.8	Pass
							26.2 (b)	
		Diagonal	L2x2x1/4	23	-3598.39	15160.10	23.7	Pass
							39.4 (b)	
		Diagonal	L2x2x1/4	24	-3598.57	15160.10	23.7	Pass
							39.4 (b)	
		Diagonal	L2x2x1/4	25	-1609.51	15160.10	10.6	Pass
							17.5 (b)	
		Diagonal	L2x2x1/4	26	-1676.67	15160.10	11.1	Pass
							18.3 (b)	
		Diagonal	L2x2x1/4	27	-1140.17	15160.10	7.5	Pass
							12.5 (b)	
		Diagonal	L2x2x1/4	28	-1293.96	15160.10	8.5	Pass
							14.1 (b)	
		Diagonal	L2x2x1/4	29	-1334.18	15160.10	8.8	Pass
							14.6 (b)	
		Diagonal	L2x2x1/4	30	-1122.16	15160.10	7.4	Pass
							12.4 (b)	
T2	120 - 100	Diagonal	L2x2x5/16	34	-9420.80	19590.90	48.1	Pass
							73.4 (b)	
		Diagonal	L2x2x5/16	35	-9420.35	19590.90	48.1	Pass
							73.4 (b)	

Section No.	Elevation ft	Component Type	Size	Critical Element	P lb	$øP_{allow}$ lb	% Capacity	Pass Fail
		Diagonal	L2x2x5/16	36	-9097.70	19590.90	46.4 69.9 (b)	Pass
		Diagonal	L2x2x5/16	37	-8959.57	19590.90	45.7 69.8 (b)	Pass
		Diagonal	L2x2x5/16	38	-10188.10	19590.90	52.0 79.4 (b)	Pass
		Diagonal	L2x2x5/16	39	-10202.20	19590.90	52.1 79.5 (b)	Pass
		Diagonal	L2x2x5/16	40	-8361.37	19590.90	42.7 65.7 (b)	Pass
		Diagonal	L2x2x5/16	41	-8356.29	19590.90	42.7 65.7 (b)	Pass
		Diagonal	L2x2x5/16	42	-8230.61	19590.90	42.0 64.7 (b)	Pass
		Diagonal	L2x2x5/16	43	-8240.35	19590.90	42.1 64.9 (b)	Pass
		Diagonal	L2x2x5/16	44	-9310.26	19590.90	47.5 73.2 (b)	Pass
		Diagonal	L2x2x5/16	45	-9305.60	19590.90	47.5 73.1 (b)	Pass
		Diagonal	L2x2x5/16	46	-7025.79	19590.90	35.9 54.9 (b)	Pass
		Diagonal	L2x2x5/16	47	-7030.07	19590.90	35.9 54.9 (b)	Pass
		Diagonal	L2x2x5/16	48	-7192.59	19590.90	36.7 55.5 (b)	Pass
		Diagonal	L2x2x5/16	49	-6941.99	19590.90	35.4 54.2 (b)	Pass
		Diagonal	L2x2x5/16	50	-7835.02	19590.90	40.0 61.2 (b)	Pass
		Diagonal	L2x2x5/16	51	-7836.77	19590.90	40.0 61.2 (b)	Pass
		Diagonal	L2x2x5/16	52	-4753.69	19590.90	24.3 37.3 (b)	Pass
		Diagonal	L2x2x5/16	53	-4750.79	19590.90	24.2 37.2 (b)	Pass
		Diagonal	L2x2x5/16	54	-4915.92	19590.90	25.1 38.0 (b)	Pass
		Diagonal	L2x2x5/16	55	-4752.00	19590.90	24.3 37.2 (b)	Pass
		Diagonal	L2x2x5/16	56	-5811.02	19590.90	29.7 45.6 (b)	Pass
		Diagonal	L2x2x5/16	57	-5810.03	19590.90	29.7 45.6 (b)	Pass
T3	100 - 80	Diagonal	L2x2x1/4	64	-6708.27	11132.90	60.3 73.6 (b)	Pass
		Diagonal	L2x2x1/4	65	-6726.40	11132.90	60.4 73.4 (b)	Pass
		Diagonal	L2x2x1/4	66	-6090.15	11132.90	54.7 65.6 (b)	Pass
		Diagonal	L2x2x1/4	67	-5993.54	11132.90	53.8 65.6 (b)	Pass
		Diagonal	L2x2x1/4	68	-7295.61	11132.90	65.5 79.7 (b)	Pass
		Diagonal	L2x2x1/4	69	-7281.59	11132.90	65.4 79.8 (b)	Pass
		Diagonal	L2x2x1/4	70	-6715.33	12147.40	55.3 73.6 (b)	Pass
		Diagonal	L2x2x1/4	71	-6732.56	12147.40	55.4 73.4 (b)	Pass
		Diagonal	L2x2x1/4	72	-5984.87	12147.40	49.3	Pass

Section No.	Elevation ft	Component Type	Size	Critical Element	P lb	$øP_{allow}$ lb	% Capacity	Pass Fail
							64.7 (b)	
		Diagonal	L2x2x1/4	73	-5920.13	12147.40	48.7	Pass
							64.7 (b)	
		Diagonal	L2x2x1/4	74	-7288.69	12147.40	60.0	Pass
							79.5 (b)	
		Diagonal	L2x2x1/4	75	-7273.78	12147.40	59.9	Pass
							79.7 (b)	
		Diagonal	L2x2x1/4	76	-6856.85	13148.10	52.2	Pass
							75.7 (b)	
		Diagonal	L2x2x1/4	77	-6872.17	13148.10	52.3	Pass
							75.5 (b)	
		Diagonal	L2x2x1/4	78	-6019.99	13148.10	45.8	Pass
							66.3 (b)	
		Diagonal	L2x2x1/4	79	-6026.59	13148.10	45.8	Pass
							66.5 (b)	
		Diagonal	L2x2x1/4	80	-7387.15	13148.10	56.2	Pass
							81.2 (b)	
		Diagonal	L2x2x1/4	81	-7365.18	13148.10	56.0	Pass
							81.3 (b)	
		Diagonal	L2x2x1/4	82	-6818.19	14147.90	48.2	Pass
							74.0 (b)	
		Diagonal	L2x2x1/4	83	-6852.21	14147.90	48.4	Pass
							73.9 (b)	
		Diagonal	L2x2x1/4	84	-6023.64	14147.90	42.6	Pass
							64.1 (b)	
		Diagonal	L2x2x1/4	85	-5861.61	14147.90	41.4	Pass
							63.4 (b)	
		Diagonal	L2x2x1/4	86	-7231.49	14147.90	51.1	Pass
							78.1 (b)	
		Diagonal	L2x2x1/4	87	-7218.41	14147.90	51.0	Pass
							78.4 (b)	
T4	80 - 60	Diagonal	L2x2x5/16	91	-7438.51	9718.34	76.5	Pass
		Diagonal	L2x2x5/16	92	-7451.96	9718.34	76.7	Pass
		Diagonal	L2x2x5/16	93	-6964.28	9718.34	71.7	Pass
		Diagonal	L2x2x5/16	94	-6795.00	9718.34	69.9	Pass
		Diagonal	L2x2x5/16	95	-8164.25	9718.34	84.0	Pass
		Diagonal	L2x2x5/16	96	-8154.01	9718.34	83.9	Pass
		Diagonal	L2x2x5/16	97	-7129.43	10532.30	67.7	Pass
		Diagonal	L2x2x5/16	98	-7145.33	10532.30	67.8	Pass
		Diagonal	L2x2x5/16	99	-6583.26	10532.30	62.5	Pass
		Diagonal	L2x2x5/16	100	-6430.57	10532.30	61.1	Pass
		Diagonal	L2x2x5/16	101	-7871.51	10532.30	74.7	Pass
		Diagonal	L2x2x5/16	102	-7859.66	10532.30	74.6	Pass
		Diagonal	L2x2x5/16	103	-7028.14	11439.20	61.4	Pass
		Diagonal	L2x2x5/16	104	-7042.58	11439.20	61.6	Pass
		Diagonal	L2x2x5/16	105	-6383.55	11439.20	55.8	Pass
		Diagonal	L2x2x5/16	106	-6267.77	11439.20	54.8	Pass
		Diagonal	L2x2x5/16	107	-7715.36	11439.20	67.4	Pass
		Diagonal	L2x2x5/16	108	-7702.60	11439.20	67.3	Pass
		Diagonal	L2x2x5/16	109	-7029.68	12450.70	56.5	Pass
		Diagonal	L2x2x5/16	110	-7044.95	12450.70	56.6	Pass
		Diagonal	L2x2x5/16	111	-6297.15	12450.70	50.6	Pass
		Diagonal	L2x2x5/16	112	-6200.61	12450.70	49.8	Pass
		Diagonal	L2x2x5/16	113	-7635.99	12450.70	61.3	Pass
		Diagonal	L2x2x5/16	114	-7620.96	12450.70	61.2	Pass
T5	60 - 40	Diagonal	L2 1/2x2 1/2x1/4	118	-7955.10	11804.20	67.4	Pass
							76.2 (b)	
		Diagonal	L2 1/2x2 1/2x1/4	119	-7964.12	11804.20	67.5	Pass
							76.1 (b)	
		Diagonal	L2 1/2x2 1/2x1/4	120	-7680.88	11804.20	65.1	Pass
							71.7 (b)	

Section No.	Elevation ft	Component Type	Size	Critical Element	P lb	$øP_{allow}$ lb	% Capacity	Pass Fail
		Diagonal	L2 1/2x2 1/2x1/4	121	-7507.79	11804.20	63.6 73.8 (b)	Pass
		Diagonal	L2 1/2x2 1/2x1/4	122	-8910.68	11804.20	75.5 85.2 (b)	Pass
		Diagonal	L2 1/2x2 1/2x1/4	123	-8902.15	11804.20	75.4 85.2 (b)	Pass
		Diagonal	L2 1/2x2 1/2x1/4	124	-8003.24	12684.90	63.1 76.6 (b)	Pass
		Diagonal	L2 1/2x2 1/2x1/4	125	-8014.63	12684.90	63.2 76.5 (b)	Pass
		Diagonal	L2 1/2x2 1/2x1/4	126	-7727.41	12684.90	60.9 71.6 (b)	Pass
		Diagonal	L2 1/2x2 1/2x1/4	127	-7492.73	12684.90	59.1 72.8 (b)	Pass
		Diagonal	L2 1/2x2 1/2x1/4	128	-8950.29	12684.90	70.6 85.5 (b)	Pass
		Diagonal	L2 1/2x2 1/2x1/4	129	-8943.17	12684.90	70.5 85.5 (b)	Pass
		Diagonal	L2 1/2x2 1/2x1/4	130	-7770.64	13659.30	56.9 74.3 (b)	Pass
		Diagonal	L2 1/2x2 1/2x1/4	131	-7781.72	13659.30	57.0 74.2 (b)	Pass
		Diagonal	L2 1/2x2 1/2x1/4	132	-7436.60	13659.30	54.4 68.9 (b)	Pass
		Diagonal	L2 1/2x2 1/2x1/4	133	-7223.07	13659.30	52.9 69.8 (b)	Pass
		Diagonal	L2 1/2x2 1/2x1/4	134	-8627.69	13659.30	63.2 82.3 (b)	Pass
		Diagonal	L2 1/2x2 1/2x1/4	135	-8619.61	13659.30	63.1 82.4 (b)	Pass
		Diagonal	L2 1/2x2 1/2x1/4	136	-7600.01	14739.60	51.6 72.7 (b)	Pass
		Diagonal	L2 1/2x2 1/2x1/4	137	-7610.79	14739.60	51.6 72.6 (b)	Pass
		Diagonal	L2 1/2x2 1/2x1/4	138	-7166.80	14739.60	48.6 66.9 (b)	Pass
		Diagonal	L2 1/2x2 1/2x1/4	139	-7005.43	14739.60	47.5 67.7 (b)	Pass
		Diagonal	L2 1/2x2 1/2x1/4	140	-8377.37	14739.60	56.8 80.0 (b)	Pass
		Diagonal	L2 1/2x2 1/2x1/4	141	-8367.70	14739.60	56.8 80.1 (b)	Pass
T6	40 - 20	Diagonal	L3x3x5/16	145	-11157.00	13866.00	80.5	Pass
		Diagonal	L3x3x5/16	146	-11699.70	13866.00	84.4	Pass
		Diagonal	L3x3x5/16	147	-11411.00	13866.00	82.3	Pass
		Diagonal	L3x3x5/16	148	-10749.30	13866.00	77.5	Pass
		Diagonal	L3x3x5/16	149	-12689.50	13866.00	91.5	Pass
		Diagonal	L3x3x5/16	150	-12689.90	13866.00	91.5	Pass
		Diagonal	L3x3x5/16	154	-10594.50	15168.50	69.8 71.0 (b)	Pass
		Diagonal	L3x3x5/16	155	-11205.40	15168.50	73.9	Pass
		Diagonal	L3x3x5/16	156	-10766.90	15168.50	71.0	Pass
		Diagonal	L3x3x5/16	157	-10099.60	15168.50	66.6 67.6 (b)	Pass
		Diagonal	L3x3x5/16	158	-11988.60	15168.50	79.0 80.4 (b)	Pass
		Diagonal	L3x3x5/16	159	-11989.80	15168.50	79.0 80.5 (b)	Pass
T7	20 - 0	Diagonal	L3 1/2x3 1/2x3/8	166	-12574.20	22044.50	57.0 81.0 (b)	Pass
		Diagonal	L3 1/2x3 1/2x3/8	167	-13596.90	22044.50	61.7	Pass

Section No.	Elevation ft	Component Type	Size	Critical Element	P lb	$øP_{allow}$ lb	% Capacity	Pass Fail
							87.5 (b)	
		Diagonal	L3 1/2x3 1/2x3/8	168	-13288.60	22044.50	60.3	Pass
							85.6 (b)	
		Diagonal	L3 1/2x3 1/2x3/8	169	-12289.00	22044.50	55.7	Pass
							79.1 (b)	
		Diagonal	L3 1/2x3 1/2x3/8	170	-14611.60	22044.50	66.3	Pass
							94.1 (b)	
		Diagonal	L3 1/2x3 1/2x3/8	171	-14476.10	22044.50	65.7	Pass
							93.2 (b)	
		Diagonal	L3 1/2x3 1/2x3/8	175	-11720.40	24052.30	48.7	Pass
							75.5 (b)	
		Diagonal	L3 1/2x3 1/2x3/8	176	-12186.90	24052.30	50.7	Pass
							78.5 (b)	
		Diagonal	L3 1/2x3 1/2x3/8	177	-12029.30	24052.30	50.0	Pass
							77.5 (b)	
		Diagonal	L3 1/2x3 1/2x3/8	178	-11378.00	24052.30	47.3	Pass
							73.3 (b)	
		Diagonal	L3 1/2x3 1/2x3/8	179	-13390.60	24052.30	55.7	Pass
							86.2 (b)	
		Diagonal	L3 1/2x3 1/2x3/8	180	-13390.30	24052.30	55.7	Pass
							86.2 (b)	
T6	40 - 20	Secondary Horizontal	L2 1/2x2 1/2x1/4	151	-1086.42	7000.70	15.5	Pass
		Secondary Horizontal	L2 1/2x2 1/2x1/4	152	-1109.55	7000.70	15.8	Pass
		Secondary Horizontal	L2 1/2x2 1/2x1/4	153	-1109.32	7000.70	15.8	Pass
		Secondary Horizontal	L2 1/2x2 1/2x1/4	160	-779.96	8211.47	9.5	Pass
		Secondary Horizontal	L2 1/2x2 1/2x1/4	161	-819.24	8211.47	10.0	Pass
		Secondary Horizontal	L2 1/2x2 1/2x1/4	162	-819.45	8211.47	10.0	Pass
T7	20 - 0	Secondary Horizontal	L2 1/2x2 1/2x1/4	172	-852.23	5263.42	16.2	Pass
		Secondary Horizontal	L2 1/2x2 1/2x1/4	173	-849.70	5263.42	16.1	Pass
		Secondary Horizontal	L2 1/2x2 1/2x1/4	174	-861.78	5263.42	16.4	Pass
		Secondary Horizontal	L2 1/2x2 1/2x1/4	181	-1216.75	6039.40	20.1	Pass
		Secondary Horizontal	L2 1/2x2 1/2x1/4	182	-1237.47	6039.40	20.5	Pass
		Secondary Horizontal	L2 1/2x2 1/2x1/4	183	-1237.41	6039.40	20.5	Pass
T1	140 - 120	Top Girt	L2x2x1/4	4	-165.97	6587.95	2.5	Pass
		Top Girt	L2x2x1/4	5	-180.59	6587.95	2.7	Pass
		Top Girt	L2x2x1/4	6	-206.68	6587.95	3.1	Pass
T3	100 - 80	Top Girt	L2x2x1/4	61	-815.45	6731.16	12.1	Pass
		Top Girt	L2x2x1/4	62	-822.74	6731.16	12.2	Pass
		Top Girt	L2x2x1/4	63	-822.97	6731.16	12.2	Pass
							Summary	
						Leg (T7)	73.1	Pass
						Diagonal (T7)	94.1	Pass
						Secondary Horizontal (T7)	20.5	Pass
						Top Girt (T3)	12.2	Pass
						Bolt Checks	94.1	Pass
						RATING =	**94.1**	**Pass**

ANCHOR BOLT ANALYSIS

ANCHOR BOLT ANALYSIS

Input Data

Tower Reactions:

Uplift:	$Uplift := 327.699 kips$	*user input*	
Shear:	$Shear := 40.326 kips$	*user input*	
Compression:	$Compression := 374.835 kips$	*user input*	

Anchor Bolt Data:

Use ASTM A36 (actual material strength unknown, therefore assume min. design values)

Number of Anchor Bolts = N	$N := 8$	*user input*	
Bolt Ultimate Strength:	$F_u := 58 \cdot ksi$	*user input*	
Bolt Yield Strength:	$Fy := 36 \cdot ksi$	*user input*	
Bolt Modulus:	$E := 29000 ksi$	*user input*	
Thickness of Anchor Bolts	$D := 1.5 in$	*user input*	
Threads per Inch:	$n := 6$	*user input*	
Coefficient of Friction:	$\mu := 0.55$	*user input*	(for baseplate with grout ASCE 10-97)
Length from top of pier to bottom of leveling nut:	$L_{ar} := 0 in$	*user input*	
Bolt Modulus:	$E := 29000 \cdot ksi$	*user input*	

Anchor Bolt Section Properties:

Gross Area of Bolt:

$$A_g := \frac{\pi}{4} \cdot D^2 \qquad A_g = 1.77 \cdot in^2$$

Net Area of Bolt:

$$A_n := \frac{\pi}{4} \cdot \left(D - \frac{0.9743 \cdot in}{n}\right)^2 \qquad A_n = 1.41 \cdot in^2$$

Net Diameter:

$$D_n := D - \frac{0.9743 in}{n} \qquad D_n = 1.34 \cdot in$$

Radius of Gyration of Bolt:

$$r := \frac{D_n}{4} \qquad r = 0.33 \cdot in$$

Plastic Section Modulus of Bolt:

$$Z_x := \frac{D_n^{\,3}}{6} \qquad Z_x = 0.4 \cdot in^3$$

Forces:

Tension Force:

$$T_u := \frac{Uplift}{N}$$

$$T_u = 40.96 \cdot kip \qquad T_{ub} := T_u$$

Shear Force:

$$V_u := \frac{Shear}{N}$$

$$V_u = 5.04 \cdot kip \qquad V_{ub} := V_u$$

Resistance Factor for Flexure (ANSI/TIA-222-G 4.7):

$$\phi_f := 0.9$$

Resistance Factor for Anchor Bolt (ANSI/TIA-222-G 4.5.4.2):

$$\phi_b := 0.80$$

Resistance Factor for Tension (ANSI/TIA-222-G 4.9.6.1):

$$\phi_t := 0.75$$

Resistance Factor for Shear (ANSI/TIA-222-G 4.9.6.3):

$$\phi_v := 0.75$$

ANSI/TIA-222-G 4.7.1 Flexural Members:

Nominal Flexure Strength, Mn:

$M_n := Fy \cdot Z_x$

$M_n = 1.2 \cdot ft \cdot kip$

$\phi_f \cdot M_n = 1.08 \cdot ft \cdot kip$

Applied Moment due to Shear (worst case lever arm), Mu:

$M_u := L_{ar} \cdot V_u$

$M_u = 0 \cdot ft \cdot kip$

Flexure Check:

$FlexureCheck := if(M_u \le \phi_f \cdot M_n, "OK", "NO\ GOOD")$

$FlexureCheck = "OK"$

$\frac{M_u}{\phi_f \cdot M_n} = 0 \cdot \%$

ANSI/TIA-222-G 4.9.6.1 Tensile Strength:

Design Tensile Strength, Rnt:

$R_{nt} := F_u \cdot A_n$

$R_{nt} = 81.5 \cdot ft \cdot kip$

$\phi_t \cdot R_{nt} = 61.13 \cdot ft \cdot kip$

Tension Check:

$TensionCheck := if(T_u \le \phi_t \cdot R_{nt}, "OK", "NO\ GOOD")$

$TensionCheck = "OK"$

$\frac{T_u}{\phi_t \cdot R_{nt}} = 67.01 \cdot \%$

ANSI/TIA-222-G 4.9.6.3 Design Shear Strength:

Design Shear Strength, Rnv:

$R_{nv} := 0.45 \cdot F_u \cdot A_g$

$R_{nv} = 46.12 \cdot ft \cdot kip$

$\phi_v \cdot R_{nv} = 34.59 \cdot ft \cdot kip$

Shear Check:

$ShearCheck := if(V_u \le \phi_v \cdot R_{nv}, "OK", "NO\ GOOD")$

$ShearCheck = "OK"$

$\frac{V_u}{\phi_v \cdot R_{nv}} = 14.57 \cdot \%$

ANSI/TIA-222-G 4.9.6.4 Combined Shear and Tension:

$$\left[\frac{V_{ub}}{(\phi_v \cdot R_{nv})}\right]^2 + \left[\frac{T_{ub}}{(\phi_t \cdot R_{nt})}\right]^2 \le 1$$

$$\left[\frac{V_{ub}}{(\phi_v \cdot R_{nv})}\right]^2 + \left[\frac{T_{ub}}{(\phi_t \cdot R_{nt})}\right]^2 = 0.47$$

Combined Shear and Tension Check:

$$ShearAndTensionCheck := \text{if}\left[\left[\frac{V_{ub}}{(\phi_v \cdot R_{nv})}\right]^2 + \left[\frac{T_{ub}}{(\phi_t \cdot R_{nt})}\right]^2 \le 1, \text{"OK"}, \text{"NO GOOD"}\right]$$

ShearAndTensionCheck = "OK"

ANSI/TIA-222-G 4.9.9 Anchor Rods (Capacity):

$$\frac{\left[T_u + \left(\frac{V_u}{\eta}\right)\right]}{\phi_b \cdot P_n} \le 1$$

$\eta := 0.55$ *user input from ANSI/TIA-222-G 4.9.9*

$$\frac{\left[T_u + \left(\frac{V_u}{\eta}\right)\right]}{\phi_b \cdot F_u \cdot A_n} = 0.77$$

Capacity Check:

$$CapacityCheck := \text{if}\left[\frac{\left[T_u + \left(\frac{V_u}{\eta}\right)\right]}{\phi_b \cdot F_u \cdot A_n} \le 1, \text{"OK"}, \text{"NO GOOD"}\right]$$

CapacityCheck = "OK"

FOUNDATION ANALYSIS

PIER AND MAT FOUNDATION ANALYSIS - NO PIERS

TOWER FORCES:

Moment Caused by Tower $M_t := 4964 \cdot kip \cdot ft$

MOD NOTE: The 3 foot clip distance is to remove the corner of foundation away from the overall stability of the foundation pad

Shear at Base of Tower $S_t := 66.783 \cdot kip$

Max Compressive Force $C_t := 374.835 \cdot kip$

Max Uplift $U_t := 327.699 \cdot kip$

Height of Tower $H_t := 140 \cdot ft$

Width of Tower at Base $W_t := 15.864 \cdot ft$

Weight of Tower $WT_t := 1.0 \cdot kip$

NOTE: Weight of Tower is incorporated into the other loads listed above and is therefore set equal to one for programming.

FOOTING DIMENSIONS:

Width of Footing $W_f := 31.5 \cdot ft + 0ft$

*NOTE: Footing width considered Foundation modification from AECOM Project PNS-625 *08/21/2017)*

Width of Clipped Corner $W_{clip} := 3ft$

Length of Clipped Corner $L_{clip} := 3ft$

Overall Depth of Footing $D_f := 4.5ft$

Length of Pier $L_p := 0 \cdot ft$

Extension of Pier Above Grade $L_{pag} := 0.5 \cdot ft$

Diameter of Pier $d_p := 0 \cdot ft$

Thickness of Footing $T_f := 4.5 \cdot ft$

Reinforement Cover: $Cvr := 3in$

$$A_{mat} := W_f^2 - \frac{W_{clip} \cdot L_{clip}}{2} \qquad A_{mat} = 988 \cdot ft^2$$

MATERIAL PROPERTIES:

Compressive Strength of Concrete $f'c := 1975.19 \cdot psi$

NOTE: Value Reduced - See Following Calculations

Yield Strength of Steel Reinforcement $fy := 60000 \cdot psi$

Internal Friction Angle of Soil $\phi_s := 35 \cdot deg$

Allowable Bearing Capacity $q_s := 6000 \cdot psf$

Ultimate Bearing Capacity $R_s := 2 \cdot q_s$

Unit Weight of Soil $\gamma_s := 130 \cdot pcf$

Unit Weight of Concrete $\gamma_c := 150 \cdot pcf$

Depth to Neglect $n := 4.5 \cdot ft$

Cohesion of Clay Type Soil $c := 0 \cdot ksf$

Note: Use 0 for Sandy Soil

Coefficient of Lateral Soil Pressure $K_p := \frac{1 + \sin(\phi_s)}{1 - \sin(\phi_s)}$ $\quad K_p = 3.6902$

What is Position of Center of Tower with respect to Center of Pad?

1=Offset
2=Not Offset

$Pos_{tower} := 2$

STEEL REINFORCING:

PIER REINFORCEMENT:

Bar Size $BSpier := 0$ Bar Diameter $d_{bpier} := 0 \cdot in$ Number of Bars $NBpier := 0$ Bar Area $A_{bpier} := 0 \cdot in^2$

PAD REINFORCEMENT:

Bar Size $BS_{pad} := 11$ Bar Diameter $d_{bpad} := 1.41 \cdot in$ Number of Bars $NB_{pad} := 39$ Bar Area $A_{bpad} := 1.56 \cdot in^2$

FOUNDATION OVERVIEW

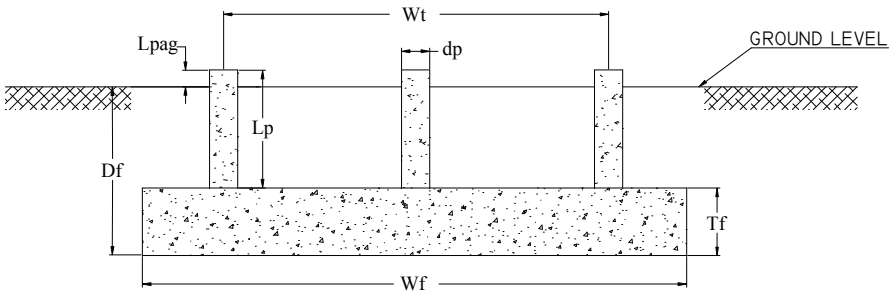

ELEVATION

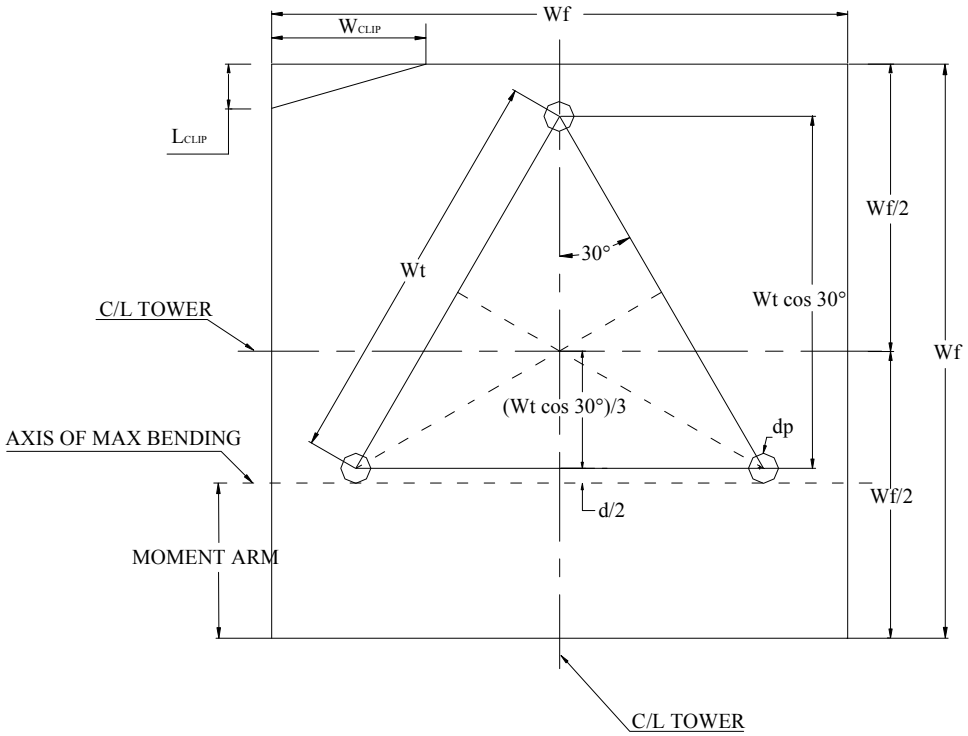

PLAN

STABILITY OF FOOTING

NOTE: Recduction factor is implemented as 0.75 for pull-out/uplift of foundation. Reduction factor shall be applied to Overturning Moment in this case.

Passive Pressure:

$P_{pn} := K_p \cdot \gamma_s \cdot n + c \cdot 2 \cdot \sqrt{K_p}$ $\quad P_{pt} := K_p \cdot \gamma_s \cdot (D_f - T_f) + c \cdot 2 \cdot \sqrt{K_p}$ $\quad P_{top} := \text{if}[n < (D_f - T_f), P_{pt}, P_{pn}]$

$P_{bot} := K_p \cdot \gamma_s \cdot D_f + c \cdot 2 \cdot \sqrt{K_p}$ $\quad P_{pn} = 2.1588 \cdot ksf$ $\quad P_{pt} = 0 \cdot ksf$ $\quad P_{top} = 2.1588 \cdot ksf$ $\quad P_{bot} = 2.1588 \cdot ksf$

$P_{ave} := \dfrac{P_{top} + P_{bot}}{2}$ $\qquad P_{ave} = 2.1588 \cdot ksf$

Shear:

$T_{pp} := \text{if}[n < (D_f - T_f), T_f, (D_f - n)]$ $\qquad T_{pp} = 0 \cdot ft$

$A_{pp} := W_f \cdot T_{pp}$ $\qquad A_{pp} = 0 \cdot ft^2$

Ultimate Shear:

$S_u := P_{ave} \cdot A_{pp}$ $\qquad S_u = 0 \cdot kip$

Weight of Concrete Pad:

$WT_c := (W_f^2 \cdot T_f) \cdot \gamma_c$ $\qquad WT_c = 669.7687 \cdot kip$

Weight of Soil: above Footing:

$WT_{s1} := W_f^2 (|D_f - T_f|) \cdot \gamma_s$ $\qquad WT_{s1} = 0 \cdot kip$

Weight of Soil Wedge at back face:

$WT_{s2} := \left[\dfrac{(D_f - n)^2 \cdot \tan(\phi_s)}{2} \cdot W_f\right] \cdot \gamma_s$ $\qquad WT_{s2} = 0 \cdot kip$

Eccentricity of Foundation Due to Clipped Corner

$Eccentricity_1 := \dfrac{W_f}{2} - \dfrac{W_f^2 \cdot \dfrac{W_f}{2} - \dfrac{L_{clip} \cdot W_{clip}}{2} \cdot \left(W_f - \dfrac{W_{clip}}{3}\right)}{A_{mat}}$ $\qquad Eccentricity_1 = 0.0672 \cdot ft$

$Eccentricity_2 := \dfrac{W_f}{2} - \dfrac{W_f^2 \cdot \dfrac{W_f}{2} - \dfrac{L_{clip} \cdot W_{clip}}{2} \cdot \left(W_f - \dfrac{L_{clip}}{3}\right)}{A_{mat}}$ $\qquad Eccentricity_2 = 0.0672 \cdot ft$

Distance to center of Tower Leg from Edge of Footing:

$X_{t1} := \dfrac{W_f}{2} - \dfrac{W_t \cdot \cos(30 \cdot deg)}{2}$ $\qquad X_{t2} := \dfrac{W_f}{2} - \dfrac{W_t \cdot \cos(30 \cdot deg)}{3}$

$X_t := \text{if}(Pos_{tower} = 1, X_{t1}, X_{t2})$ $\qquad X_t = 11.1705 \cdot ft$

Additional Offset of Footing:

$X_{off1} := \dfrac{W_f}{2} - \left(\dfrac{W_t \cdot \cos(30 \cdot deg)}{3} + X_t\right)$ $\qquad X_{off2} := 0$

$X_{off} := \text{if}(Pos_{tower} = 1, X_{off1}, X_{off2})$ $\qquad X_{off} = 0 \cdot ft$

Resisting Moment:

$M_r := (WT_c + WT_{s1}) \cdot \dfrac{W_f}{2} + WT_t \cdot \left(\dfrac{W_f}{2} - X_{off}\right) + S_u \cdot \dfrac{T_{pp}}{3} + WT_{s2} \cdot \left(W_f + \dfrac{T_{pp} \cdot \tan(\phi_s)}{3}\right)$

$\phi_{OT} := 0.75$ ***ANSI/TIA-222-G REDUCTION FACTOR*** $\qquad M_r = 10564.6078 \cdot kip \cdot ft$

Overturning Moment:

$M_{ot} := M_t + S_t \cdot (L_p + T_f) + WT_t \cdot X_{off}$ $\qquad M_{ot} = 5264.5235 \cdot kip \cdot ft$

Overturn Ratio (%):

$Ratio_{Stability} := \dfrac{M_{ot}}{M_r \cdot \phi_{OT}}$ $\qquad Ratio_{Stability} = 66.44 \cdot \%$

$StabilityCheck := \text{if}(M_r \cdot \phi_{OT} > M_{ot}, \text{"Okay"}, \text{"No Good"})$ $\qquad StabilityCheck = \text{"Okay"}$

BEARING PRESSURE CHECK:

Pressure Applied: $LOAD_{tot} := WT_c + WT_{s1} + WT_t$ $\quad LOAD_{tot} = 670.7687 \cdot kip$

$$I_1 := \frac{W_f^4}{12} + W_f^2 \cdot Eccentricity_1^2 - \frac{L_{clip} \cdot W_{clip}^3}{36} - L_{clip} \cdot W_{clip} \cdot \left(\frac{W_f}{2} - Eccentricity_1\right)$$

$$S_1 := \frac{I_1}{0.5 \cdot W_f + Eccentricity_1} \qquad I_1 = 81908 \cdot ft^4 \qquad S_1 = 5178 \cdot ft^3$$

$$I_2 := \frac{W_f^4}{12} + W_f^2 \cdot Eccentricity_2^2 - \frac{2W_{clip} \cdot L_{clip}^3}{36} - L_{clip} \cdot W_{clip} \cdot \left(\frac{W_f}{2} - Eccentricity_2\right)$$

$$S_2 := \frac{I_2}{0.5 \cdot W_f + Eccentricity_2} \qquad I_2 = 81906 \cdot ft^4 \qquad S_2 = 5178 \cdot ft^3$$

$S := \min(S_1, S_2)$ $\quad S = 5178 \cdot ft^3$

$$P_{max} := \frac{LOAD_{tot}}{A_{mat}} + \frac{M_{ot}}{S} \qquad P_{max} = 1.6957 \cdot ksf$$

$$P_{min} := \frac{LOAD_{tot}}{A_{mat}} - \frac{M_{ot}}{S} \qquad P_{min} = -0.3376 \cdot ksf$$

$MaxPressure := if(P_{max} < q_s, "Okay", "No Good")$ $\quad MaxPressure = "Okay"$

$MinPressure := if[(P_{min} \geq 0) \cdot (P_{min} < q_s), "Okay", "No Good"]$ $\quad MinPressure = "No Good"$

Distance to Resultant of Pressure Distribution:

$$X_p := \frac{P_{max}}{\frac{P_{max} - P_{min}}{W_f}} \cdot \frac{1}{3} \qquad X_p = 8.7568 \cdot ft$$

Distance to Kern: $X_k := \frac{W_f}{3}$ $\quad X_k = 10.5 \cdot ft$

Since Resultant Force is Not in Kern, Area to which Pressure is Applied Must be Reduced.

Eccentricity: $e := \frac{M_{ot}}{LOAD_{tot}}$ $\quad e = 7.8485$

Adjusted Soil Pressure: $q_a := \frac{2 \cdot LOAD_{tot}}{3 \cdot W_f \cdot \left(\frac{W_f}{2} - e\right)}$

override if needed
dist (ft) - Cons. Estimate

$e := 11.5$

$q_a = 3.3403 \cdot ksf$

Revised Maximum: $q_{max} := if(X_p < X_k, q_a, P_{max})$ $\quad q_{max} = 3.3403 \cdot ksf$

$PressureCheck := if(q_{max} < 0.75 \cdot R_s, "Okay", "No Good")$ $\quad PressureCheck = "Okay"$

CHECK PUNCHING AND BEAM SHEAR:

Beam Shear: (Critical section located at a distance d from the face of Pier) (ACI 11.3.1.1)

$\phi_c := 0.85$ (ACI 9.3.2.3)

$d := T_f - Cvr - .5 \cdot in$ $\qquad d = 50.5 \cdot in$

Factored load: $FL := \dfrac{C_t}{W_f^{\,2}}$ $\qquad FL = 0.3778 \cdot ksf$

$V_{req} := \dfrac{FL \cdot (X_t - 0.5 \cdot d_p - d) \cdot W_f}{\phi_c}$ $\qquad V_{req} = 97.4658 \cdot kip$

ACI 11.3.1.1 $\quad V_{Avail} := 2 \cdot \sqrt{f'c \cdot psi} \cdot W_f \cdot d$ $\qquad V_{Avail} = 1696.749 \cdot kip$

$BeamShearCheck := if(V_{req} < V_{Avail}, "Okay", "No Good")$ $\qquad BeamShearCheck = "Okay"$

Punching Shear: (Critical Section Located at a distance of d/2 from the face of pier) (ACI 11.12.2.1)

$b_o := (d_p + d) \cdot \pi$ $\qquad b_o = 13.2209 \cdot ft$

$V_{req} := FL \cdot \dfrac{W_f^{\,2} - (d_p + d)^2 \cdot \frac{\pi}{4}}{\phi_c}$ $\qquad V_{req} = 434.8006 \cdot kip$

$V_{Avail} := 4 \cdot \sqrt{f'c \cdot psi} \cdot b_o \cdot d$ $\qquad V_{Avail} = 1424.2855 \cdot kip$

$PunchingShearCheck := if(V_{req} < V_{Avail}, "Okay", "No Good")$ $\qquad PunchingShearCheck = "Okay"$

TENSILE REINFORCEMENT IN PAD:

$\phi_m := 0.90$ per ACI 9.3.2.2

Applied Moments:

$$M_{nT} := \left[U_t \cdot \left(W_t \cdot \sin(60 \cdot deg) - \frac{d_p}{2}\right) + S_t \cdot \left(D_f + L_{pag}\right)\right] - WT_t \cdot X_{off}$$

$$M_{nS} := -1 \cdot \left[\frac{1}{2} \cdot \left(\frac{W_f}{2} + \frac{W_t}{3} \cdot \cos(30 \cdot deg) - \frac{d_p}{2}\right)^2 \cdot W_t \cdot \left[\gamma_s \cdot \left(T_{pp} - T_f\right)\right] + WT_{s2} \cdot \left[\frac{W_f}{2} + \frac{W_t}{3} \cdot \cos(30 \cdot deg) - \frac{d_p}{2} + \left(D_f - n\right) \cdot \tan\left(\phi_s\right)\right]\right]$$

$$M_{nC} := -1 \cdot \left[\frac{1}{2} \cdot \left(\frac{W_f}{2} + \frac{W_t}{3} \cdot \cos(30 \cdot deg) - \frac{d_p}{2}\right)^2 \cdot W_t \cdot \left(\gamma_c \cdot T_f\right)\right]$$

Design Moment: $M_n := \dfrac{M_{nT} + M_{nS} + M_{nC}}{\phi_m}$ $\quad M_n = 5045.5663 \cdot kips \cdot ft$

Required Reinforcement:

ACI 10.2.7.3

$$\beta := if\left[f'c \le 4000 \cdot psi, .85, if\left[f'c \ge 8000 \cdot psi, .65, .85 - \left(\frac{\frac{f'c}{psi} - 4000}{1000}\right) \cdot .05\right]\right] \qquad \beta = 0.85$$

Effective Width: $b_{eff} := W_t \cdot \cos(30 \cdot deg) + d_p$ $\quad b_{eff} = 164.8635 \cdot in$

$$A_s := \frac{M_n}{\phi_m \cdot fy \cdot d} \qquad A_s = 22.2027 \cdot in^2$$

$$a := \frac{A_s \cdot fy}{\beta \cdot f'c \cdot b_{eff}} \qquad a = 4.8129 \cdot in$$

$$A_s := \frac{M_n}{fy \cdot \left(d - \frac{a}{2}\right)} \qquad A_s = 20.9823 \cdot in^2$$

$$\rho := \frac{A_s}{b_{eff} \cdot d} \qquad \rho = 0.0025$$

Temperature and Shrinkage: $\rho_{sh} := \text{if}(fy \geq 60000 \cdot psi, 0.0018, 0.0020)$ $\rho_{sh} = 0.0018$

(ACI 7.12.2.1b)

Area Required: $As := \text{if}\left(\rho \geq \rho_{sh}, A_s, \rho_{sh} \cdot \frac{b_{eff}}{2} \cdot d\right)$ $As = 20.9823 \cdot in^2$

Area Provided: $As_{prov} := A_{bpad} \cdot NB_{pad}$ $As_{prov} = 60.84 \cdot in^2$

$PadReinforcement := \text{if}\left(As_{prov} > As, \text{"Okay"}, \text{"No Good"}\right)$ PadReinforcement = "Okay"

DEVELOPMENT LENGTH OF PAD REINFORCEMENT:

TENSION (ACI 12.2.3)

Bar Spacing: $B_{sPad} := \frac{W_f - 2 \cdot Cvr - NB_{pad} \cdot d_{bpad}}{NB_{pad} - 1}$ $B_{sPad} = 8.3424 \cdot in$

Development Length Factors:

Reinforcement Location Factor	$\alpha := 1.0$
Coating Factor	$\beta := 1.0$
Concrete strength Factor	$\lambda := 1.0$
Reinforcement Size Factor	$\gamma := 1.0$

Spacing or Cover Dimension: $c := \text{if}\left(Cvr < \frac{B_{sPad}}{2}, Cvr, \frac{B_{sPad}}{2}\right)$ $c = 3 \cdot in$

Transverse Reinforcement Inde As allowed by ACI 12.2.4 $k_{tr} := 0$

Development Length: $L_{dbt} := \frac{3}{40} \cdot \frac{fy}{\sqrt{f'c \cdot psi}} \cdot \frac{\alpha \cdot \beta \cdot \gamma \cdot \lambda}{\frac{c + k_{tr}}{d_{bpad}}} \cdot d_{bpad}$ $L_{dbt} = 67.1004 \cdot in$

$L_{dbmin} := 12 \cdot in$

Minimum Development Length: $L_{dbtCheck} := \text{if}\left(L_{dbt} \geq L_{dbmin}, \text{"Use L.dbt"}, \text{"Use L.dbmin"}\right)$ $L_{dbtCheck} = \text{"Use L.dbt"}$

(ACI 12.2.1)

Available Length in Pad: $L_{Pad} := \frac{W_f}{2} - \frac{W_t}{2} - Cvr$ $L_{Pad} = 90.816 \cdot in$

$LpadTension := \text{if}\left(L_{Pad} > L_{dbt}, \text{"Okay"}, \text{"No Good"}\right)$ LpadTension = "Okay"

Concrete Strength

MATHCAD Constants:

$kip := 1000lbf$ $lb := 1lbf$ $k := 1kip$ $Ton := 2k$

$psi := 1\frac{lbf}{in^2}$ $pcf := 1\frac{lb}{ft^3}$ $psf := 1\frac{lb}{ft^2}$ $ksi := \frac{kip}{in^2}$ $kcf := \frac{k}{ft^3}$ $ksf := \frac{k}{ft^2}$ $ftk := 1ft \cdot 1kip$

Find concrete design strength from results of core testing. Reference ACI 214.4R-10

Results from Core Testing:

	Length	Diameter	Length/Diameter
Sample 1	$l_1 := 8.2 \cdot in$	$d_1 := 3.950 \cdot in$	$\frac{l_1}{d_1} = 2.08$
Sample 2	$l_2 := 7.9 \cdot in$	$d_2 := 3.94 \cdot in$	$\frac{l_2}{d_2} = 2.01$
Sample 3	$l_3 := 8.20 \cdot in$	$d_3 := 3.94 \cdot in$	$\frac{l_3}{d_3} = 2.08$
Sample 4	$l_4 := 8.20 \cdot in$	$d_4 := 3.94 \cdot in$	$\frac{l_4}{d_4} = 2.08$

	Area	Load	Unadjusted Strength
Sample 1	$A_1 := \frac{\pi \cdot d_1^2}{4} = 12.25 \cdot in^2$	$P_1 := 36.610 \cdot kip$	$f_{core.1} := \frac{P_1}{A_1} = 2987.55\ psi$
Sample 2	$A_2 := \frac{\pi \cdot d_2^2}{4} = 12.19 \cdot in^2$	$P_2 := 28.360 \cdot kip$	$f_{core.2} := \frac{P_2}{A_2} = 2326.08\ psi$
Sample 3	$A_3 := \frac{\pi \cdot d_3^2}{4} = 12.19 \cdot in^2$	$P_3 := 44.260 \cdot kip$	$f_{core.3} := \frac{P_3}{A_3} = 3630.19\ psi$
Sample 4	$A_4 := \frac{\pi \cdot d_4^2}{4} = 12.19 \cdot in^2$	$P_4 := 33.610 \cdot kip$	$f_{core.4} := \frac{P_4}{A_4} = 2756.68\ psi$

Adjustment Factors (Ref. T. 9.1)
Length to Diameter Ratio Factor:
The concrete was tested in the dry condition.

$$\alpha := \frac{3 \cdot 10^{-6}}{psi}$$

Sample 1 $F_{ld.1} := 1 - (0.144 - \alpha \cdot f_{core.1}) \cdot \left(2 - \frac{l_1}{d_1}\right)^2 = 0.9992$ $V_{ld1} := \frac{2.5 \cdot \left(2 - \frac{l_1}{d_1}\right)^2}{100} = 0.0001$

Sample 2 $F_{ld.2} := 1 - (0.144 - \alpha \cdot f_{core.2}) \cdot \left(2 - \frac{l_2}{d_2}\right)^2 = 1.0000$ $V_{ld2} := \frac{2.5 \cdot \left(2 - \frac{l_2}{d_2}\right)^2}{100} = 6.4418 \times 10^{-7}$

Sample 3 $F_{ld.3} := 1 - (0.144 - \alpha \cdot f_{core.3}) \cdot \left(2 - \frac{l_3}{d_3}\right)^2 = 0.9991$ $V_{ld3} := \frac{2.5 \cdot \left(2 - \frac{l_3}{d_3}\right)^2}{100} = 0.0002$

Sample 4 $F_{ld.4} := 1 - (0.144 - \alpha \cdot f_{core.4}) \cdot \left(2 - \frac{l_4}{d_4}\right)^2 = 0.9991$ $V_{ld4} := \frac{2.5 \cdot \left(2 - \frac{l_4}{d_4}\right)^2}{100} = 0.0002$

Diameter Factor:

Sample 1 $F_{dia.1} := \frac{(d_1 - 2 \cdot in) \cdot (1 - 1.06)}{4 \cdot in - 2 \cdot in} + 1.06 = 1.0015$ $V_{dia.1} := \frac{\frac{(d_1 - 2 \cdot in) \cdot (0 - 11.8)}{4 \cdot in - 2 \cdot in} + 11.8}{100} = 0.0029$

Sample 2 $F_{dia.2} := \frac{(d_2 - 2 \cdot in) \cdot (1 - 1.06)}{4 \cdot in - 2 \cdot in} + 1.06 = 1.0018$ $V_{dia.2} := \frac{\frac{(d_2 - 2 \cdot in) \cdot (0 - 11.8)}{4 \cdot in - 2 \cdot in} + 11.8}{100} = 0.0035$

Sample 3 $F_{dia.3} := \frac{(d_3 - 2 \cdot in) \cdot (1 - 1.06)}{4 \cdot in - 2 \cdot in} + 1.06 = 1.0018$ $V_{dia.3} := \frac{\frac{(d_3 - 2 \cdot in) \cdot (0 - 11.8)}{4 \cdot in - 2 \cdot in} + 11.8}{100} = 0.0035$

Sample 4 $F_{dia.4} := \frac{(d_4 - 2 \cdot in) \cdot (1 - 1.06)}{4 \cdot in - 2 \cdot in} + 1.06 = 1$ $V_{dia.4} := \frac{\frac{(d_4 - 2 \cdot in) \cdot (0 - 11.8)}{4 \cdot in - 2 \cdot in} + 11.8}{100} = 0.0035$

Moisture Content Factor: $F_{mc} := 0.96$ $V_{mc} := 0.025$

Damage due to Drilling Factor: $F_d := 1.06$ $V_d := 0.025$

Equivalent Concrete Strength

Adjusted Concrete Strength:

Sample 1 $f_{c1} := f_{core.1} \cdot F_{ld.1} \cdot F_{dia.1} \cdot F_{mc} \cdot F_d = 3042.32\ \text{psi}$

Sample 2 $f_{c2} := f_{core.2} \cdot F_{ld.2} \cdot F_{dia.2} \cdot F_{mc} \cdot F_d = 2371.27\ \text{psi}$

Sample 3 $f_{c3} := f_{core.3} \cdot F_{ld.3} \cdot F_{dia.3} \cdot F_{mc} \cdot F_d = 3697.48\ \text{psi}$

Sample 4 $f_{c4} := f_{core.4} \cdot F_{ld.4} \cdot F_{dia.4} \cdot F_{mc} \cdot F_d = 2807.73\ \text{psi}$

Average $f_{c.bar} := \dfrac{f_{c1} + f_{c2} + f_{c3} + f_{c4}}{4} = 2979.7\ \text{psi}$

Sample Standard Deviation $s_c := \sqrt{\dfrac{(f_{c1} - f_{c.bar})^2}{3} + \dfrac{(f_{c2} - f_{c.bar})^2}{3} + \dfrac{(f_{c3} - f_{c.bar})^2}{3} + \dfrac{(f_{c4} - f_{c.bar})^2}{3}}$

$s_c = 553.44\ \text{psi}$

NOTE: "3" is obtained from "n-1" as indicated from equation (9-3)

Overal Length to Diameter Variance $V_{ld} := \min(V_{ld1}, V_{ld2}, V_{ld3}, V_{ld4}) = 6.4418 \times 10^{-7}$ Note: Use sample with smaller l/d ratio

Overal Diameter Variance $V_{dia} := \dfrac{V_{dia.1} + V_{dia.2} + V_{dia.3} + V_{dia.4}}{4} = 0.0034$

Standard Deviation of In-Place Strength $s_a := f_{c.bar} \cdot \sqrt{V_{ld}^2 + V_{dia}^2 + V_d^2 + V_{mc}^2} = 105.83\ \text{psi}$

T-Factor, 4 samples, 90% Confidence (T.9.4) $T := 1.64$

Z-Factor, 90% Confidence (T.9.3) $Z := 1.28$

Lower Bound Estimate on Mean In-Place Strength (Eq 9-8) $f_{c.CL} := f_{c.bar} - \sqrt{\dfrac{(T \cdot s_c)^2}{2} + (Z \cdot s_a)^2} = 2323.76\ \text{psi}$

C-Factor, structure composed of one member, multiple batches of cast-in-place concrete (T.9.5) $C := 0.85$

Equivalent Concrete Specified Strength to be used in Rating (Eq. 9-9) $\boxed{f_{c.eq} := C \cdot f_{c.CL} = 1975.19\ \text{psi}}$

ANALYSIS UNDER TIA-222-F DESIGN CRITERIA (DESPP / CSP)

Section	T1	T2	T3	T4	T5	T6	T7
Legs	SR 2	SR 2 3/4	3 SR w/ (4) 2"x0.75" Bars	3 1/4 SR w/ (4) 2"x0.75" Bars	3 1/2 SR w/ (4) 2"x0.75" Bars	3 3/4 SR w/ (4) 2"x0.75" Bars	3 3/4 SR w/ (4) 2"x0.75" Bars
Leg Grade	A572-50	A572-50	A572-50	A572-50	A572-50	A572-50	A572-50
Diagonals	L2x2x1/4	L2x2x5/16	L2x2x1/4	L2x2x5/16	L2 1/2x2 1/2x1/4	L3x3x5/16	L3 1/2x3 1/2x3/8
Diagonal Grade	A36	A572-50	A36	A572-50	A36	A572-50	A572-50
Top Girts	L2x2x1/4	N.A.	L2x2x1/4	N.A.	N.A.	L2 1/2x2 1/2x1/4	
Sec. Horizontals			N.A.				
Face Width (ft)	6.25			8.1728	10.0956	12.0184	13.9412 / 15.864
# Panels @ (ft)			20 @ 5			4 @ 10	
Weight (lb)	1285.0	1928.3	3383.5	3869.6	4338.0	4970.7	5630.8 / 25405.9

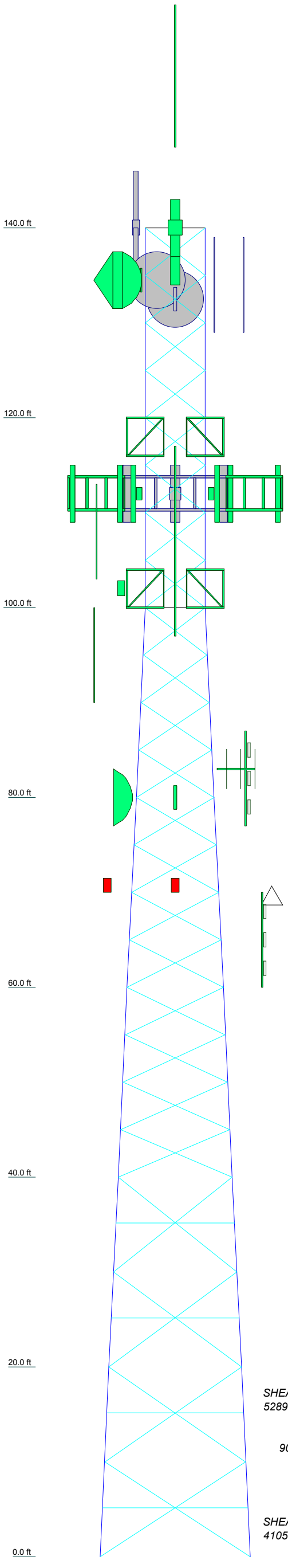

DESIGNED APPURTENANCE LOADING

TYPE	ELEVATION
Lightning Rod 1"x10' (DNK-27)	156
Flash Beacon Lighting (DNK-26)	140
WPA-70063-2CF Panel Antenna (Tr. E P25 TX)	140
432E-83I-01T TTA Unit (Tr. E P25 TX/RX)	140
WPA-70063-2CF Panel Antenna (Tr. E P25 RX)	140
6' Side-Arm (Tr. E P25 Antenna Mount)	140
WPA-70063-2CF Panel Antenna (Tr. E P25 (Diversity) RX)	140
SE419-SWBP2LDF(D00) Panel (Tr. F P25 TX)	140
432E-83I-01T TTA Unit (Tr. F P25 TX/RX)	140
(2) 6' Side-Arm (PSA6 - SitePro1) (Tr. F P25 Antenna Mount)	140
SC479-HF1LDF (D00I-E6085) (Tr. F P25 Antenna)	140 - 128
SC479-HF1LDF (D00I-E6085) (Tr. F P25 (Diversity) RX)	140 - 128
6'x4.5" OD Pipe Mount (Tr. E P25)	140
6'x4.5" OD Pipe Mount (Tr. E (Diversity) P25)	140
2'6"x4" Pipe Mount (DNK-23)	134.5
6' Dish w/ Radome (PA6-65) (DNK-23)	134.5
Commscope PAR6-59W-PXA/A (CSP)	134.5
6'x4.5" OD Pipe Mount (CSP - Dish)	134
2'6"x4" Pipe Mount (DNK-22)	132.5
6' Dish w/ Radome (PA6-65) (DNK-22)	132.5
6' Side-Arm (DNK-19)	125
8' Side Arm (DNK-15)	118
8' Side Arm (DNK-14)	118
8' Side Arm (DNK-14)	118
8' Side Arm (DNK-15)	118
SC479-HF1LDF (inverted) (DNK-14)	115 - 99
DB586-Y (DNK-8)	113 - 103
Commscope SF-QV12-B Mount Frame (T-Mobile - Proposed)	112
Commscope SF-QV12-B Mount Frame (T-Mobile - Proposed)	112
Commscope SF-QV12-B Mount Frame (T-Mobile - Proposed)	112
RFS APXVAARR24_43-U-NA20 Panel Antenna (T-Mobile - Proposed)	112
RFS APXVAARR24_43-U-NA20 Panel Antenna (T-Mobile - Proposed)	112

TYPE	ELEVATION
RFS APXVAARR24_43-U-NA20 Panel Antenna (T-Mobile - Proposed)	112
Ericsson 4449 B71 + B12 Radio Unit (T-Mobile - Proposed)	112
Ericsson 4449 B71 + B12 Radio Unit (T-Mobile - Proposed)	112
Ericsson 4449 B71 + B12 Radio Unit (T-Mobile - Proposed)	112
Ericsson Radio 4415 B25 RRH Unit (T-Mobile - Proposed)	112
Ericsson Radio 4415 B25 RRH Unit (T-Mobile - Proposed)	112
Ericsson Radio 4415 B25 RRH Unit (T-Mobile - Proposed)	112
Ericsson Radio 4415 B66A RRH (T-Mobile - Proposed)	112
Ericsson Radio 4415 B66A RRH (T-Mobile - Proposed)	112
Ericsson Radio 4415 B66A RRH (T-Mobile - Proposed)	112
DB224-A (DNK-9)	111 - 101
6' Side Mount Standoff (DNK-6)	102
432E-83I-01T TTA Unit (DNK-7)	102
8' Side Arm (DNK-10)	102
DB222-A (inverted) (DNK-10)	102 - 92
8' Side Arm (DNK-10)	102
DB586-Y (inverted) (DNK-6)	100 - 90
DB438 (DNK-5)	83
DB222-A (DNK-4)	82
4' Side Mount Standoff (DNK-4)	81
2'6"x4" Pipe Mount (DNK-3)	80
PR-950 (DNK-3)	80
L-810 Obstruction Lighting (1) (Tower)	70
L-810 Obstruction Lighting (1) (Tower)	70
531-70 Dipole (DNK-2)	69 - 61
5' Side-Arm (DNK-2)	65
DB438 (DNK-1)	60

MATERIAL STRENGTH

GRADE	Fy	Fu	GRADE	Fy	Fu
A572-50	50 ksi	65 ksi	A36	36 ksi	58 ksi

TOWER DESIGN NOTES

1. Tower designed for a 90 mph basic wind in accordance with the TIA/EIA-222-F Standard.
2. Tower is also designed for a 90 mph basic wind with 0.50 in ice.
3. Deflections are based upon a 90 mph wind.
4. Listed elevations are from DNK Tower Climb and are identified as Centerline of antenna/appurtenance
5. CSP wind-load speed governs per 2013 State Building Code Amendment to wind speed (105 3-sec = 82 mph fastest mile)

MAX. CORNER REACTIONS AT BASE:
DOWN: 333198 lb
SHEAR: 32764 lb

UPLIFT: -289325 lb
SHEAR: 28753 lb

AXIAL
45875 lb
SHEAR 52899 lb
MOMENT 4368 kip-ft

TORQUE 33 kip-ft
90 mph WIND - 0.5000 in ICE

AXIAL
33903 lb
SHEAR 41058 lb
MOMENT 3378 kip-ft

TORQUE 22 kip-ft
REACTIONS - 90 mph WIND

AECOM
500 Enterprise Drive, Suite 3B
Rocky Hill, CT
Phone: 860-529-8882
FAX: 860-529-3991

Job:	***Analysis - 140' Lattice Tower (CSP #83)***		
Project:	***East Lyme, Connecticut - DESPP / CSP Load Analysis***		
Client:	Transcend Wireless / T-Mobile / TWM-018	Drawn by: MCD	App'd:
Code:	TIA/EIA-222-F	Date: 05/14/19	Scale: NTS
Path:	P:\Projects\Telcom\StructuralsByLocation\Connecticut\EastLyme\CSP#83\10_60604314_TWM-018\TIA-F\DESPP_CSP_East Lyme.eri		Dwg No. E-1

MATERIAL STRENGTH

GRADE	Fy	Fu	GRADE	Fy	Fu
A572-50	50 ksi	65 ksi	A36	36 ksi	58 ksi

TOWER DESIGN NOTES

1. Tower designed for a 90 mph basic wind in accordance with the TIA/EIA-222-F Standard.
2. Tower is also designed for a 90 mph basic wind with 0.50 in ice.
3. Deflections are based upon a 90 mph wind.
4. Listed elevations are from DNK Tower Climb and are identified as Centerline of antenna/appurtenance
5. CSP wind-load speed governs per 2013 State Building Code Amendment to wind speed (105 3-sec = 82 mph fastest mile)

Section	T7	T6	T5	T4	T3	T2	T1
Legs	3 3/4 SR w/ (4) 2"x0.75" Bars		3 1/2 SR w/ (4) 2"x0.75" Bars	3 1/4 SR w/ (4) 2"x0.75" Bars	3 SR w/ (4) 2"x0.75" Bars	SR 2 3/4	SR 2
Leg Grade	A572-50						
Diagonals	L3 1/2x3 1/2x3/8	L3x3x5/16	L2 1/2x2 1/2x1/4	L2x2x5/16	L2x2x1/4	L2x2x5/16	L2x2x1/4
Diagonal Grade	A572-50		A36	A572-50	A36	A572-50	A36
Top Girts	N.A.				L2x2x1/4	N.A.	L2x2x1/4
Sec. Horizontals	L2 1/2x2 1/2x1/4		N.A.				
Face Width (ft) 15.864	13.9412	12.0184	10.0956	8.1728	6.25		
# Panels @ (ft)	4 @ 10		20 @ 5				
Weight (lb) 25405.9	5630.8	4970.7	4338.0	3869.6	3383.5	1928.3	1285.0

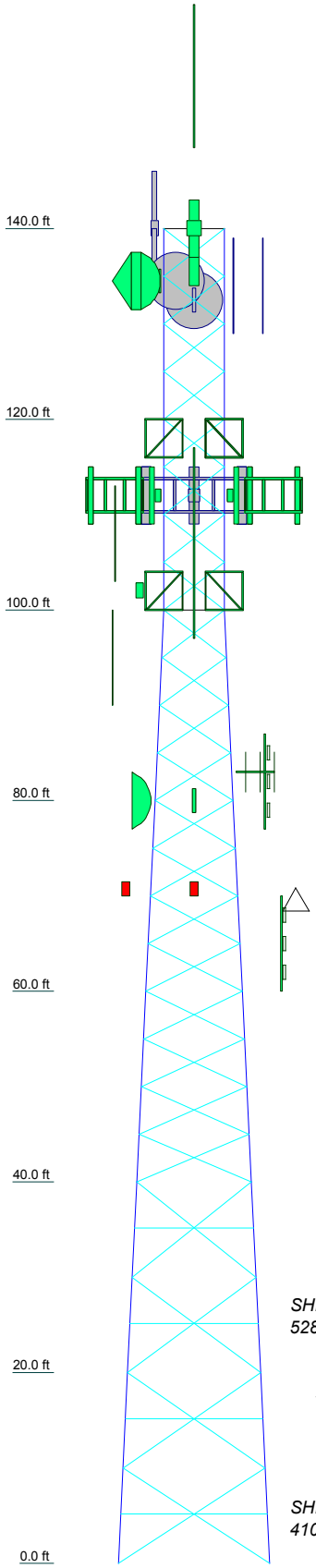

MAX. CORNER REACTIONS AT BASE:
DOWN: 333198 lb
SHEAR: 32764 lb

UPLIFT: -289325 lb
SHEAR: 28753 lb

AXIAL
45875 lb

SHEAR
52899 lb

MOMENT
4368 kip-ft

TORQUE 33 kip-ft
90 mph WIND - 0.5000 in ICE

AXIAL
33903 lb

SHEAR
41058 lb

MOMENT
3378 kip-ft

TORQUE 22 kip-ft
REACTIONS - 90 mph WIND

AECOM
500 Enterprise Drive, Suite 3B
Rocky Hill, CT
Phone: 860-529-8882
FAX: 860-529-3991

Job:	***Analysis - 140' Lattice Tower (CSP #83)***
Project:	***East Lyme, Connecticut - DESPP / CSP Load Analysis***
Client:	Transcend Wireless / T-Mobile / TWM-018
Drawn by:	MCD
App'd:	
Code:	TIA/EIA-222-F
Date:	05/14/19
Scale:	NTS
Path:	P:\Projects\Telcom\StructuralsByLocation\Connecticut\EastLymeCSP#83\10_60604314_TWM-018\TIA-F\DESPP_CSP_East Lyme.eri
Dwg No.	E-1

Feed Line Distribution Chart
0' - 140'

Round | Flat | App In Face | App Out Face | Truss Leg

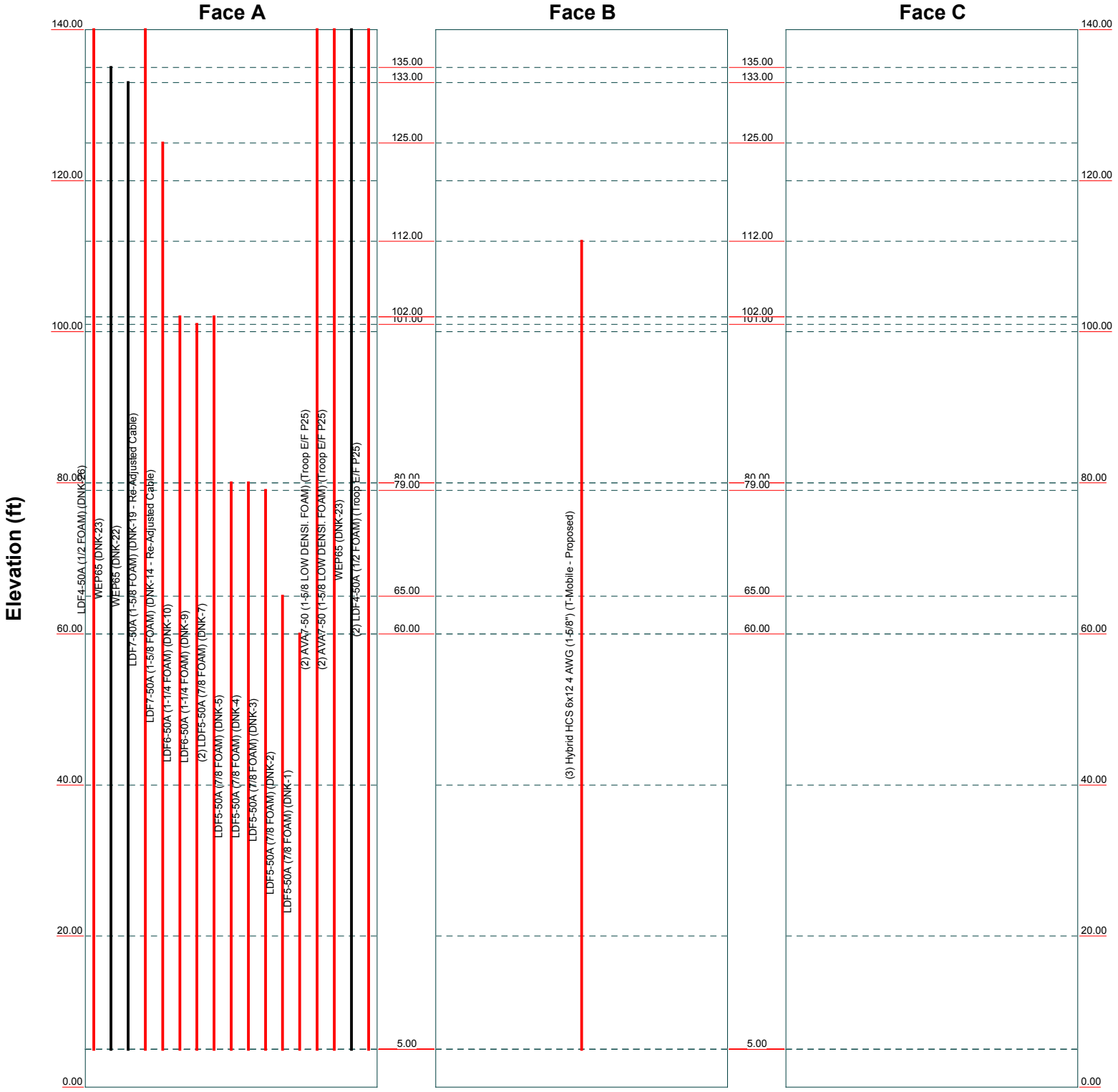

AECOM 500 Enterprise Drive, Suite 3B Rocky Hill, CT Phone: 860-529-8882 FAX: 860-529-3991	Job: ***Analysis - 140' Lattice Tower (CSP #83)***		
	Project: ***East Lyme, Connecticut - DESPP / CSP Load Analysis***		
	Client: Transcend Wireless / T-Mobile / TWM-018	Drawn by: MCD	App'd:
	Code: TIA/EIA-222-F	Date: 05/14/19	Scale: NTS
	Path: P:\Projects\Telcom\StructuralsByLocation\Connecticut\EastLymeCSP#83\10_60604314_TWM-018\TIA-F\DESPP_CSP_East Lyme.eri		Dwg No. E-7

Feed Line Plan

Round Flat App In Face App Out Face

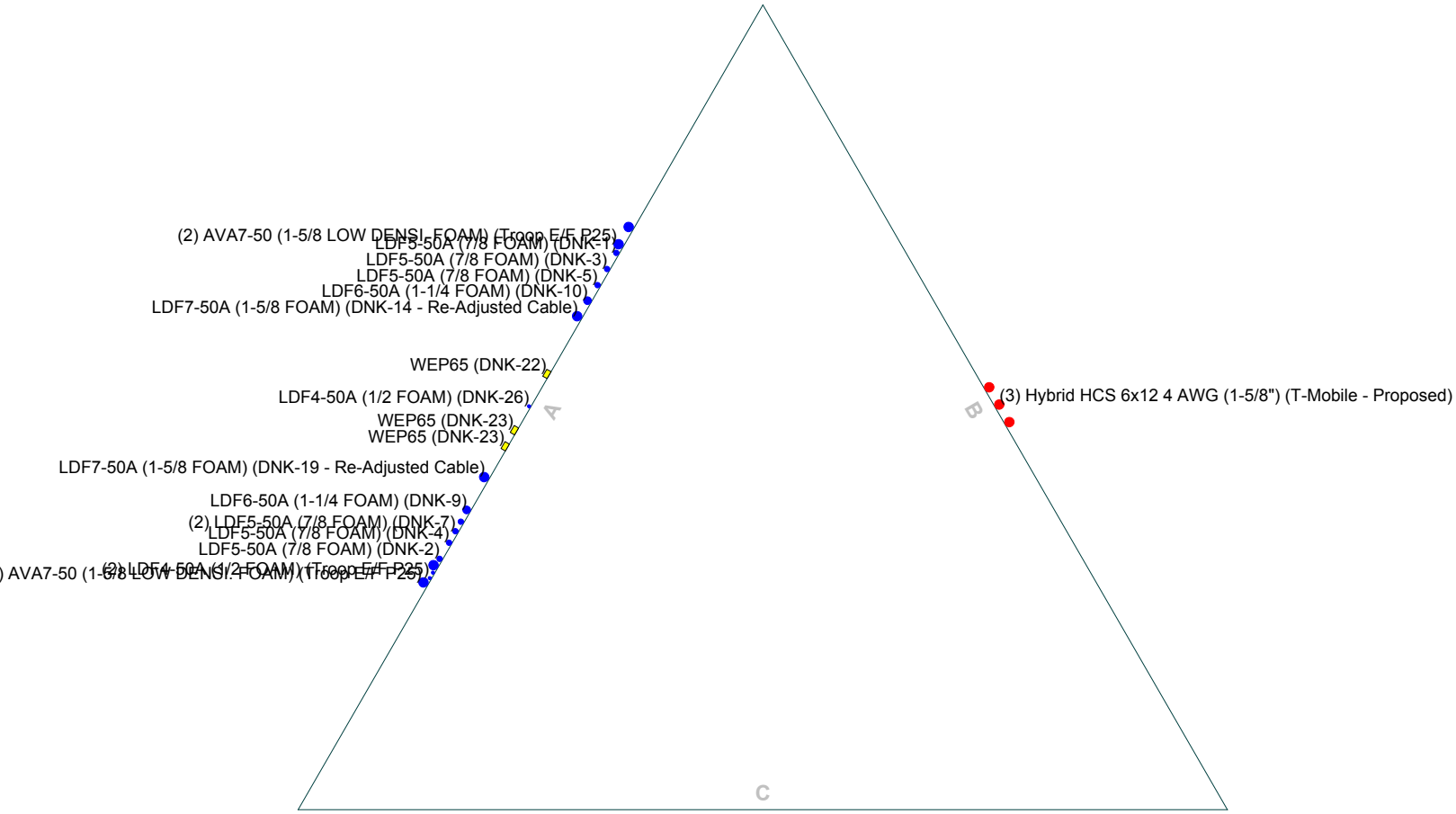

AECOM
500 Enterprise Drive, Suite 3B
Rocky Hill, CT
Phone: 860-529-8882
FAX: 860-529-3991

Job:	***Analysis - 140' Lattice Tower (CSP #83)***		
Project:	***East Lyme, Connecticut - DESPP / CSP Load Analysis***		
Client:	Transcend Wireless / T-Mobile / TWM-018	Drawn by: MCD	App'd:
Code:	TIA/EIA-222-F	Date: 05/14/19	Scale: NTS
Path:	P:\Projects\Telcom\StructuralsByLocation\Connecticut\EastLymeCSP#83\10_60604314_TWM-018\TIA-F\DESPP_CSP_East Lyme.eri		Dwg No. E-7

TIA/EIA-222-F - Service - 90 mph

Maximum Values

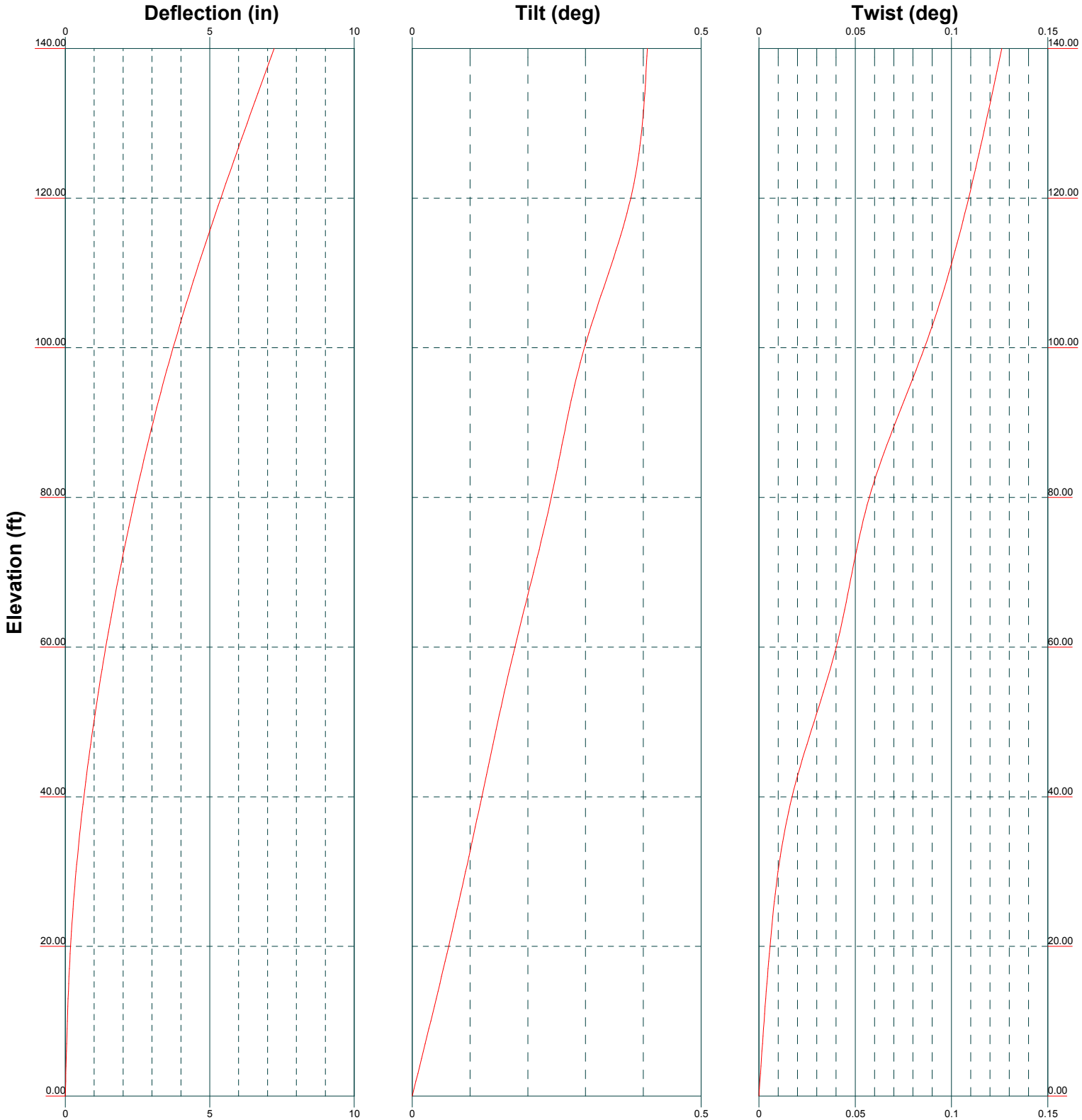

AECOM 500 Enterprise Drive, Suite 3B Rocky Hill, CT Phone: 860-529-8882 FAX: 860-529-3991	Job: ***Analysis - 140' Lattice Tower (CSP #83)***		
	Project: ***East Lyme, Connecticut - DESPP / CSP Load Analysis***		
	Client: Transcend Wireless / T-Mobile / TWM-018	Drawn by: MCD	App'd:
	Code: TIA/EIA-222-F	Date: 05/14/19	Scale: NTS
	Path: P:\Projects\Telcom\StructuralsByLocation\Connecticut\EastLymeCSP#83\10_60604314_TWM-018\TIA-F\DESPP_CSP_East Lyme.eri		Dwg No. E-5

Tower Input Data

The main tower is a 3x free standing tower with an overall height of 140.00 ft above the ground line.
The base of the tower is set at an elevation of 0.00 ft above the ground line.
The face width of the tower is 6.25 ft at the top and 15.86 ft at the base.
This tower is designed using the TIA/EIA-222-F standard.
The following design criteria apply:

Basic wind speed of 90 mph.
Nominal ice thickness of 0.5000 in.
Ice density of 56 pcf.
A wind speed of 90 mph is used in combination with ice.
Deflections calculated using a wind speed of 90 mph.
Listed elevations are from DNK Tower Climb and are identified as Centerline of antenna/appurtenance.
CSP wind-load speed governs per 2013 State Building Code Amendment to wind speed (105 3-sec = 82 mph fastest mile).
A non-linear (P-delta) analysis was used.
Pressures are calculated at each section.
Stress ratio used in tower member design is 1.333.
Local bending stresses due to climbing loads, feed line supports, and appurtenance mounts are not considered.

Options

Consider Moments - Legs
Consider Moments - Horizontals
Consider Moments - Diagonals
Use Moment Magnification
√ Use Code Stress Ratios
√ Use Code Safety Factors - Guys
Escalate Ice
Always Use Max Kz
Use Special Wind Profile
√ Include Bolts In Member Capacity
√ Leg Bolts Are At Top Of Section
√ Secondary Horizontal Braces Leg
Use Diamond Inner Bracing (4 Sided)
√ SR Members Have Cut Ends
SR Members Are Concentric

√ Distribute Leg Loads As Uniform
Assume Legs Pinned
Assume Rigid Index Plate
√ Use Clear Spans For Wind Area
√ Use Clear Spans For KL/r
√ Retension Guys To Initial Tension
Bypass Mast Stability Checks
Use Azimuth Dish Coefficients
√ Project Wind Area of Appurt.
Autocalc Torque Arm Areas
Add IBC .6D+W Combination
√ Sort Capacity Reports By Component
√ Triangulate Diamond Inner Bracing
Treat Feed Line Bundles As Cylinder
Ignore KL/ry For 60 Deg. Angle Legs

Use ASCE 10 X-Brace Ly Rules
Calculate Redundant Bracing Forces
Ignore Redundant Members in FEA
√ SR Leg Bolts Resist Compression
√ All Leg Panels Have Same Allowable
Offset Girt At Foundation
√ Consider Feed Line Torque
√ Include Angle Block Shear Check
Use TIA-222-G Bracing Resist. Exemption
Use TIA-222-G Tension Splice Exemption

Poles

√ Include Shear-Torsion Interaction
Always Use Sub-Critical Flow
Use Top Mounted Sockets
Pole Without Linear Attachments
Pole With Shroud Or No Appurtenances
Outside and Inside Corner Radii Are Known

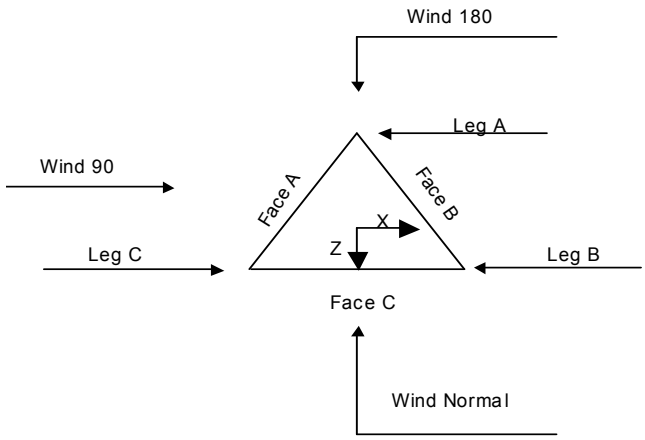

Triangular Tower

Tower Section Geometry

Tower Section	Tower Elevation ft	Assembly Database	Description	Section Width ft	Number of Sections	Section Length ft
T1	140.00-120.00			6.25	1	20.00
T2	120.00-100.00			6.25	1	20.00
T3	100.00-80.00			6.25	1	20.00
T4	80.00-60.00			8.17	1	20.00
T5	60.00-40.00			10.10	1	20.00
T6	40.00-20.00			12.02	1	20.00
T7	20.00-0.00			13.94	1	20.00

Tower Section Geometry *(cont'd)*

Tower Section	Tower Elevation ft	Diagonal Spacing ft	Bracing Type	Has K Brace End Panels	Has Horizontals	Top Girt Offset in	Bottom Girt Offset in
T1	140.00-120.00	5.00	X Brace	No	No	0.0000	0.0000
T2	120.00-100.00	5.00	X Brace	No	No	0.0000	0.0000
T3	100.00-80.00	5.00	X Brace	No	No	0.0000	0.0000
T4	80.00-60.00	5.00	X Brace	No	No	0.0000	0.0000
T5	60.00-40.00	5.00	X Brace	No	No	0.0000	0.0000
T6	40.00-20.00	10.00	X Brace	No	Yes	0.0000	0.0000
T7	20.00-0.00	10.00	X Brace	No	Yes	0.0000	0.0000

Tower Section Geometry *(cont'd)*

Tower Elevation ft	*Leg Type*	*Leg Size*	*Leg Grade*	*Diagonal Type*	*Diagonal Size*	*Diagonal Grade*
T1 140.00-120.00	Solid Round	2	A572-50 (50 ksi)	Equal Angle	L2x2x1/4	A36 (36 ksi)
T2 120.00-100.00	Solid Round	2 3/4	A572-50 (50 ksi)	Equal Angle	L2x2x5/16	A572-50 (50 ksi)
T3 100.00-80.00	Arbitrary Shape	3 SR w/ (4) 2"x0.75" Bars	A572-50 (50 ksi)	Equal Angle	L2x2x1/4	A36 (36 ksi)
T4 80.00-60.00	Arbitrary Shape	3 1/4 SR w/ (4) 2"x0.75" Bars	A572-50 (50 ksi)	Equal Angle	L2x2x5/16	A572-50 (50 ksi)
T5 60.00-40.00	Arbitrary Shape	3 1/2 SR w/ (4) 2"x0.75" Bars	A572-50 (50 ksi)	Equal Angle	L2 1/2x2 1/2x1/4	A36 (36 ksi)
T6 40.00-20.00	Arbitrary Shape	3 3/4 SR w/ (4) 2"x0.75" Bars	A572-50 (50 ksi)	Equal Angle	L3x3x5/16	A572-50 (50 ksi)
T7 20.00-0.00	Arbitrary Shape	3 3/4 SR w/ (4) 2"x0.75" Bars	A572-50 (50 ksi)	Equal Angle	L3 1/2x3 1/2x3/8	A572-50 (50 ksi)

Tower Section Geometry *(cont'd)*

Tower Elevation ft	*Top Girt Type*	*Top Girt Size*	*Top Girt Grade*	*Bottom Girt Type*	*Bottom Girt Size*	*Bottom Girt Grade*
T1 140.00-120.00	Equal Angle	L2x2x1/4	A36 (36 ksi)	Solid Round		A36 (36 ksi)
T3 100.00-80.00	Equal Angle	L2x2x1/4	A36 (36 ksi)	Solid Round		A36 (36 ksi)

Tower Section Geometry *(cont'd)*

Tower Elevation ft	*Secondary Horizontal Type*	*Secondary Horizontal Size*	*Secondary Horizontal Grade*	*Inner Bracing Type*	*Inner Bracing Size*	*Inner Bracing Grade*
T6 40.00-20.00	Equal Angle	L2 1/2x2 1/2x1/4	A36 (36 ksi)	Single Angle		A36 (36 ksi)
T7 20.00-0.00	Equal Angle	L2 1/2x2 1/2x1/4	A36 (36 ksi)	Single Angle		A572-50 (50 ksi)

Tower Section Geometry *(cont'd)*

Tower Elevation ft	Gusset Area (per face) ft^2	Gusset Thickness in	Gusset Grade	Adjust. Factor A_f	Adjust. Factor A_r	Weight Mult.	Double Angle Stitch Bolt Spacing Diagonals in	Double Angle Stitch Bolt Spacing Horizontals in	Double Angle Stitch Bolt Spacing Redundants in
T1 140.00-120.00	0.00	0.0000	A36 (36 ksi)	1	1	1	36.0000	36.0000	36.0000
T2 120.00-100.00	0.00	0.0000	A36 (36 ksi)	1	1	1	36.0000	36.0000	36.0000
T3 100.00-80.00	0.00	0.0000	A36 (36 ksi)	1	1	1	36.0000	36.0000	36.0000
T4 80.00-60.00	0.00	0.0000	A36 (36 ksi)	1	1	1	36.0000	36.0000	36.0000
T5 60.00-40.00	0.00	0.0000	A36 (36 ksi)	1	1	1	36.0000	36.0000	36.0000
T6 40.00-20.00	0.00	0.0000	A36 (36 ksi)	1	1	1	36.0000	36.0000	36.0000
T7 20.00-0.00	0.00	0.0000	A36 (36 ksi)	1	1	1	36.0000	36.0000	36.0000

Tower Section Geometry *(cont'd)*

Tower Elevation ft	Calc K Single Angles	Calc K Solid Rounds	K Factors[1] Legs	X Brace Diags X Y	K Brace Diags X Y	Single Diags X Y	Girts X Y	Horiz. X Y	Sec. Horiz. X Y	Inner Brace X Y
T1 140.00-120.00	Yes	Yes	1	1 1	1 1	1 1	1 1	1 1	1 1	1 1
T2 120.00-100.00	Yes	Yes	1	1 1	1 1	1 1	1 1	1 1	1 1	1 1
T3 100.00-80.00	Yes	Yes	1	1 1	1 1	1 1	1 1	1 1	1 1	1 1
T4 80.00-60.00	Yes	Yes	1	1 1	1 1	1 1	1 1	1 1	1 1	1 1
T5 60.00-40.00	Yes	Yes	1	1 1	1 1	1 1	1 1	1 1	1 1	1 1
T6 40.00-20.00	Yes	Yes	1	1 1	1 1	1 1	1 1	1 1	1 1	1 1
T7 20.00-0.00	Yes	Yes	1	1 1	1 1	1 1	1 1	1 1	1 1	1 1

[1]*Note: K factors are applied to member segment lengths. K-braces without inner supporting members will have the K factor in the out-of-plane direction applied to the overall length.*

Tower Section Geometry *(cont'd)*

Tower Elevation ft	Leg Net Width Deduct in	Leg U	Diagonal Net Width Deduct in	Diagonal U	Top Girt Net Width Deduct in	Top Girt U	Bottom Girt Net Width Deduct in	Bottom Girt U	Mid Girt Net Width Deduct in	Mid Girt U	Long Horizontal Net Width Deduct in	Long Horizontal U	Short Horizontal Net Width Deduct in	Short Horizontal U
T1 140.00-120.00	0.0000	0.75	0.0000	0.75	0.0000	0.75	0.0000	0.75	0.0000	0.75	0.0000	0.75	0.0000	0.75

Tower Elevation ft	Leg		Diagonal		Top Girt		Bottom Girt		Mid Girt		Long Horizontal		Short Horizontal	
	Net Width Deduct in	U	Net Width Deduct in	U	Net Width Deduct in	U	Net Width Deduct in	U	Net Width Deduct in	U	Net Width Deduct in	U	Net Width Deduct in	U
T2 120.00-100.00	0.0000	0.75	0.0000	0.75	0.0000	0.75	0.0000	0.75	0.0000	0.75	0.0000	0.75	0.0000	0.75
T3 100.00-80.00	0.0000	0.75	0.0000	0.75	0.0000	0.75	0.0000	0.75	0.0000	0.75	0.0000	0.75	0.0000	0.75
T4 80.00-60.00	0.0000	0.75	0.0000	0.75	0.0000	0.75	0.0000	0.75	0.0000	0.75	0.0000	0.75	0.0000	0.75
T5 60.00-40.00	0.0000	0.75	0.0000	0.75	0.0000	0.75	0.0000	0.75	0.0000	0.75	0.0000	0.75	0.0000	0.75
T6 40.00-20.00	0.0000	0.75	0.0000	0.75	0.0000	0.75	0.0000	0.75	0.0000	0.75	0.0000	0.75	0.0000	0.75
T7 20.00-0.00	0.0000	0.75	0.0000	0.75	0.0000	0.75	0.0000	0.75	0.0000	0.75	0.0000	0.75	0.0000	0.75

Tower Section Geometry *(cont'd)*

Tower Elevation	Connection Offsets							
	Diagonal				K-Bracing			
	Vert. Top	Horiz. Top	Vert. Bot.	Horiz. Bot.	Vert. Top	Horiz. Top	Vert. Bot.	Horiz. Bot.
ft	in	in	in	in	in	in	in	in
T1 140.00-120.00	0.0000	3.0000	0.0000	3.0000	0.0000	0.0000	0.0000	0.0000
T2 120.00-100.00	0.0000	3.0000	0.0000	3.0000	0.0000	0.0000	0.0000	0.0000
T3 100.00-80.00	0.0000	3.0000	0.0000	3.0000	0.0000	0.0000	0.0000	0.0000
T4 80.00-60.00	0.0000	3.0000	0.0000	3.0000	0.0000	0.0000	0.0000	0.0000
T5 60.00-40.00	0.0000	3.0000	0.0000	3.0000	0.0000	0.0000	0.0000	0.0000
T6 40.00-20.00	0.0000	3.0000	0.0000	3.0000	0.0000	0.0000	0.0000	0.0000
T7 20.00-0.00	0.0000	3.0000	0.0000	3.0000	0.0000	0.0000	0.0000	0.0000

Tower Section Geometry *(cont'd)*

Tower Elevation ft	Leg Connection Type	Leg		Diagonal		Top Girt		Bottom Girt		Mid Girt		Long Horizontal		Short Horizontal	
		Bolt Size in	No.	Bolt Size in	No.	Bolt Size in	No.	Bolt Size in	No.	Bolt Size in	No.	Bolt Size in	No.	Bolt Size in	No.
T1 140.00-120.00	Flange	1.0000 A325N	4	0.6250 A325X	1	0.6250 A325N	1	0.6250 A325N	0	0.6250 A325N	0	0.6250 A325N	0	0.6250 A325N	0
T2 120.00-100.00	Flange	1.0000 A325N	4	0.6250 A325X	1	0.6250 A325N	0	0.6250 A325N	0	0.6250 A325N	0	0.6250 A325N	0	0.6250 A325N	0
T3 100.00-80.00	Flange	1.0000 A325N	4	0.6250 A325X	1	0.6250 A325N	1	0.6250 A325N	0	0.6250 A325N	0	0.6250 A325N	0	0.6250 A325N	0
T4 80.00-60.00	Flange	1.0000 A325N	4	0.6250 A325X	1	0.6250 A325N	0	0.6250 A325N	0	0.6250 A325N	0	0.6250 A325N	0	0.6250 A325N	0
T5 60.00-40.00	Flange	1.1250 A325N	6	0.6250 A325X	1	0.6250 A325N	0	0.6250 A325N	0	0.6250 A325N	0	0.6250 A325N	0	0.6250 A325N	0
T6 40.00-20.00	Flange	1.1250 A325N	6	0.6250 A325X	1	0.6250 A325N	0	0.6250 A325N	0	0.6250 A325N	0	0.6250 A325N	0	0.6250 A325N	1

Tower Elevation ft	Leg Connection Type	Leg		Diagonal		Top Girt		Bottom Girt		Mid Girt		Long Horizontal		Short Horizontal	
		Bolt Size in	No.	Bolt Size in	No.	Bolt Size in	No.	Bolt Size in	No.	Bolt Size in	No.	Bolt Size in	No.	Bolt Size in	No.
T7 20.00-0.00	Flange	1.1250 A325N	6	0.6250 AISC 14th Ed ASD - A490N	1	0.6250 A325N	0	0.6250 A325N	0	0.6250 A325N	0	0.6250 A325N	0	0.6250 A325N	1

Feed Line/Linear Appurtenances - Entered As Round Or Flat

Description	Face or Leg	Allow Shield	Exclude From Torque Calculation	Component Type	Placement ft	Face Offset in	Lateral Offset (Frac FW)	#	# Per Row	Clear Spacing in	Width or Diameter in	Perimeter in	Weight plf
* Inserted Table from "G"													
LDF4-50A (1/2 FOAM) (DNK-26)	A	Yes	No	Ar (CaAa)	140.00 - 5.00	0.0000	0	1	1	0.6300	0.6300		0.15
WEP65 (DNK-23)	A	Yes	No	Af (CfAe)	135.00 - 5.00	0.0000	-0.05	1	1	1.5836	1.5836	5.1284	0.53
WEP65 (DNK-22)	A	Yes	No	Af (CfAe)	133.00 - 5.00	0.0000	0.04	1	1	1.5836	1.5836	5.1284	0.53
LDF7-50A (1-5/8 FOAM) (DNK-19 - Re-Adjusted Cable)	A	Yes	No	Ar (CaAa)	140.00 - 5.00	0.0000	-0.09	1	1	1.9800	1.9800		0.82
LDF7-50A (1-5/8 FOAM) (DNK-14 - Re-Adjusted Cable)	A	Yes	No	Ar (CaAa)	125.00 - 5.00	0.0000	0.11	1	1	1.9800	1.9800		0.82
LDF6-50A (1-1/4 FOAM) (DNK-10)	A	Yes	No	Ar (CaAa)	102.00 - 5.00	0.0000	0.13	1	1	1.5500	1.5500		0.66
LDF6-50A (1-1/4 FOAM) (DNK-9)	A	Yes	No	Ar (CaAa)	101.00 - 5.00	0.0000	-0.13	1	1	1.5500	1.5500		0.66
LDF5-50A (7/8 FOAM) (DNK-7)	A	Yes	No	Ar (CaAa)	102.00 - 5.00	0.0000	-0.15	2	2	1.0900	1.0900		0.33
LDF5-50A (7/8 FOAM) (DNK-5)	A	Yes	No	Ar (CaAa)	80.00 - 5.00	0.0000	0.15	1	1	1.0900	1.0900		0.33
LDF5-50A (7/8 FOAM) (DNK-4)	A	Yes	No	Ar (CaAa)	80.00 - 5.00	0.0000	-0.17	1	1	1.0900	1.0900		0.33
LDF5-50A (7/8 FOAM) (DNK-3)	A	Yes	No	Ar (CaAa)	79.00 - 5.00	0.0000	0.17	1	1	1.0900	1.0900		0.33
LDF5-50A (7/8 FOAM) (DNK-2)	A	Yes	No	Ar (CaAa)	65.00 - 5.00	0.0000	-0.19	1	1	1.0900	1.0900		0.33
LDF5-50A (7/8 FOAM)	A	Yes	No	Ar (CaAa)	60.00 - 5.00	0.0000	0.19	1	1	1.0900	1.0900		0.33

Description	Face or Leg	Allow Shield	Exclude From Torque Calculation	Component Type	Placement ft	Face Offset in	Lateral Offset (Frac FW)	#	# Per Row	Clear Spacing in	Width or Diameter in	Perimeter in	Weight plf
(DNK-1) AVA7-50 (1-5/8 LOW DENSI. FOAM) (Troop E/F P25)	A	Yes	No	Ar (CaAa)	140.00 - 5.00	0.0000	-0.21	2	2	1.9800	1.9800		0.72
AVA7-50 (1-5/8 LOW DENSI. FOAM) (Troop E/F P25)	A	Yes	No	Ar (CaAa)	140.00 - 5.00	0.0000	0.21	2	2	1.9800	1.9800		0.72
WEP65 (DNK-23)	A	Yes	No	Af (CfAe)	140.00 - 5.00	0.0000	-0.03	1	1	1.5836	1.5836	5.1284	0.53
LDF4-50A (1/2 FOAM) (Troop E/F P25)	A	Yes	No	Ar (CaAa)	140.00 - 5.00	0.0000	-0.21	2	2	0.6300	0.6300		0.15
Hybrid HCS 6x12 4 AWG (1-5/8") (T-Mobile - Proposed)	B	Yes	No	Ar (CfAe)	112.00 - 5.00	0.0000	0	3	3	1.9900	1.9900		1.90

Feed Line/Linear Appurtenances Section Areas

Tower Section	Tower Elevation ft	Face	A_R ft^2	A_F ft^2	C_AA_A In Face ft^2	C_AA_A Out Face ft^2	Weight lb
T1	140.00-120.00	A	0.000	6.334	24.570	0.000	112.54
		B	0.000	0.000	0.000	0.000	0.00
		C	0.000	0.000	0.000	0.000	0.00
T2	120.00-100.00	A	0.000	7.918	28.441	0.000	134.50
		B	5.970	0.000	0.000	0.000	68.40
		C	0.000	0.000	0.000	0.000	0.00
T3	100.00-80.00	A	0.000	7.918	38.100	0.000	170.80
		B	9.950	0.000	0.000	0.000	114.00
		C	0.000	0.000	0.000	0.000	0.00
T4	80.00-60.00	A	0.000	7.918	45.076	0.000	191.92
		B	9.950	0.000	0.000	0.000	114.00
		C	0.000	0.000	0.000	0.000	0.00
T5	60.00-40.00	A	0.000	7.918	49.000	0.000	203.80
		B	9.950	0.000	0.000	0.000	114.00
		C	0.000	0.000	0.000	0.000	0.00
T6	40.00-20.00	A	0.000	7.918	49.000	0.000	203.80
		B	9.950	0.000	0.000	0.000	114.00
		C	0.000	0.000	0.000	0.000	0.00
T7	20.00-0.00	A	0.000	5.938	36.750	0.000	152.85
		B	7.462	0.000	0.000	0.000	85.50
		C	0.000	0.000	0.000	0.000	0.00

Feed Line/Linear Appurtenances Section Areas - With Ice

Tower Section	Tower Elevation ft	Face or Leg	Ice Thickness in	A_R ft^2	A_F ft^2	C_AA_A In Face ft^2	C_AA_A Out Face ft^2	Weight lb
T1	140.00-120.00	A	0.500	0.000	9.001	42.010	0.000	378.30
		B		0.000	0.000	0.000	0.000	0.00
		C		0.000	0.000	0.000	0.000	0.00
T2	120.00-100.00	A	0.500	0.000	11.251	48.081	0.000	447.01
		B		8.970	0.000	0.000	0.000	123.16
		C		0.000	0.000	0.000	0.000	0.00
T3	100.00-80.00	A	0.500	0.000	11.251	65.040	0.000	564.61
		B		14.950	0.000	0.000	0.000	205.26
		C		0.000	0.000	0.000	0.000	0.00
T4	80.00-60.00	A	0.500	0.000	11.251	78.416	0.000	647.89
		B		14.950	0.000	0.000	0.000	205.26
		C		0.000	0.000	0.000	0.000	0.00
T5	60.00-40.00	A	0.500	0.000	11.251	85.940	0.000	694.74
		B		14.950	0.000	0.000	0.000	205.26
		C		0.000	0.000	0.000	0.000	0.00
T6	40.00-20.00	A	0.500	0.000	11.251	85.940	0.000	694.74
		B		14.950	0.000	0.000	0.000	205.26
		C		0.000	0.000	0.000	0.000	0.00
T7	20.00-0.00	A	0.500	0.000	8.438	64.455	0.000	521.05
		B		11.213	0.000	0.000	0.000	153.95
		C		0.000	0.000	0.000	0.000	0.00

Feed Line Shielding

Section	Elevation ft	Face	A_R ft^2	A_R Ice ft^2	A_F ft^2	A_F Ice ft^2
T1	140.00-120.00	A	0.000	2.059	2.512	4.118
		B	0.000	0.000	0.000	0.000
		C	0.000	0.000	0.000	0.000
T2	120.00-100.00	A	0.000	2.202	2.699	4.404
		B	0.000	0.383	0.510	0.766
		C	0.000	0.000	0.000	0.000
T3	100.00-80.00	A	0.000	2.946	3.556	5.892
		B	0.000	0.670	0.892	1.340
		C	0.000	0.000	0.000	0.000
T4	80.00-60.00	A	0.000	2.924	3.460	5.848
		B	0.000	0.569	0.757	1.137
		C	0.000	0.000	0.000	0.000
T5	60.00-40.00	A	0.000	3.043	4.461	7.608
		B	0.000	0.547	0.911	1.368
		C	0.000	0.000	0.000	0.000
T6	40.00-20.00	A	0.000	2.443	4.095	6.982
		B	0.000	0.439	0.836	1.256
		C	0.000	0.000	0.000	0.000
T7	20.00-0.00	A	0.000	1.772	3.331	5.681
		B	0.000	0.319	0.680	1.022
		C	0.000	0.000	0.000	0.000

Feed Line Center of Pressure

Section	Elevation ft	CP_X in	CP_Z in	CP_X Ice in	CP_Z Ice in
T1	140.00-120.00	-8.7151	-4.2772	-9.0221	-4.3073
T2	120.00-100.00	-7.9580	-6.0067	-8.3410	-6.0728
T3	100.00-80.00	-6.2280	-5.1042	-7.5073	-5.7136
T4	80.00-60.00	-8.2484	-6.7100	-10.1234	-7.6974
T5	60.00-40.00	-9.1560	-7.4645	-11.4865	-8.7873
T6	40.00-20.00	-10.2103	-8.3445	-13.0452	-10.0116
T7	20.00-0.00	-8.4499	-6.9854	-11.2463	-8.7424

Discrete Tower Loads

Description	Face or Leg	Offset Type	Offsets: Horz Lateral Vert ft ft ft	Azimuth Adjustment °	Placement ft		C_AA_A Front ft^2	C_AA_A Side ft^2	Weight lb
*** G Inventory									
*** D&K Inventory Climb									
DB438	A	None		0.0000	60.00	No Ice	0.77	0.23	7.00
(DNK-1)						1/2" Ice	0.97	0.54	10.82
*** D&K-1 Attached to Leg									
531-70 Dipole	B	From Leg	5.00	0.0000	69.00 - 61.00	No Ice	3.23	2.63	40.00
(DNK-2)			0.00			1/2" Ice	5.00	4.39	56.93
			0.00						
5' Side-Arm	B	None		0.0000	65.00	No Ice	10.60	10.60	140.00
(DNK-2)						1/2" Ice	15.40	15.40	212.00
PR-950	C	From Leg	0.50	0.0000	80.00	No Ice	6.35	6.35	38.00
(DNK-3)			0.00			1/2" Ice	11.43	11.43	49.40
			0.00						
2'6"x4" Pipe Mount	C	None		0.0000	80.00	No Ice	0.75	0.75	27.00
(DNK-3)						1/2" Ice	0.95	0.95	35.41
DB222-A	B	From Leg	4.00	0.0000	82.00	No Ice	1.60	1.60	16.00
(DNK-4)			0.00			1/2" Ice	2.88	2.88	20.80
			0.00						
4' Side Mount Standoff	B	None		0.0000	81.00	No Ice	2.72	2.72	50.00
(DNK-4)						1/2" Ice	4.91	4.91	89.00
DB438	B	From Leg	0.50	0.0000	83.00	No Ice	0.77	0.23	7.00
(DNK-5)			0.00			1/2" Ice	0.97	0.54	10.82
			0.00						
*** D&K-5 Mounted to DNK-4 MT									
DB586-Y (inverted)	C	From Leg	6.00	0.0000	90.00 - 100.00	No Ice	1.01	1.01	8.25
(DNK-6)			0.00			1/2" Ice	1.28	1.28	16.59
			0.00						
6' Side Mount Standoff	C	None		0.0000	102.00	No Ice	4.97	4.97	70.00
(DNK-6)						1/2" Ice	6.12	6.12	130.00
*** D&K-6,7,8 Share Mount									
432E-83I-01T TTA Unit	C	From Leg	3.00	0.0000	102.00	No Ice	3.33	1.11	25.00
(DNK-7)			0.00			1/2" Ice	3.57	1.27	44.70
			0.00						
DB586-Y	C	From Leg	6.00	0.0000	103.00 - 113.00	No Ice	1.01	1.01	8.25
(DNK-8)			0.00			1/2" Ice	1.28	1.28	16.59
			0.00						
DB224-A	A	From Leg	0.50	0.0000	111.00 - 101.00	No Ice	3.15	3.15	32.00
(DNK-9)			0.00			1/2" Ice	5.67	5.67	41.60

Description	Face or Leg	Offset Type	Offsets: Horz Lateral Vert ft ft ft	Azimuth Adjustment °	Placement ft		C_AA_A Front ft^2	C_AA_A Side ft^2	Weight lb
			0.00						
*** D&K-9 Direct Mount to Leg									
DB222-A (inverted)	C	From Face	6.50	0.0000	92.00 - 102.00	No Ice	1.60	1.60	16.00
(DNK-10)			0.00			1/2" Ice	2.88	2.88	20.80
			0.00						
8' Side Arm	B	From Leg	0.00	45.0000	102.00	No Ice	17.20	17.20	325.00
(DNK-10)			0.00			1/2" Ice	24.50	24.50	450.00
			0.00						
8' Side Arm	C	From Leg	0.00	-45.0000	102.00	No Ice	17.20	17.20	325.00
(DNK-10)			0.00			1/2" Ice	24.50	24.50	450.00
			0.00						
SC479-HF1LDF (inverted)	C	From Face	6.50	0.0000	99.00 - 115.00	No Ice	5.06	5.06	30.00
(DNK-14)			0.00			1/2" Ice	6.54	6.54	69.82
			0.00						
8' Side Arm	B	From Leg	0.00	45.0000	118.00	No Ice	17.20	17.20	325.00
(DNK-14)			0.00			1/2" Ice	24.50	24.50	450.00
			0.00						
8' Side Arm	C	From Leg	0.00	-45.0000	118.00	No Ice	17.20	17.20	325.00
(DNK-14)			0.00			1/2" Ice	24.50	24.50	450.00
			0.00						
8' Side Arm	A	From Leg	0.00	45.0000	118.00	No Ice	17.20	17.20	325.00
(DNK-15)			0.00			1/2" Ice	24.50	24.50	450.00
			0.00						
8' Side Arm	B	From Leg	0.00	-45.0000	118.00	No Ice	17.20	17.20	325.00
(DNK-15)			0.00			1/2" Ice	24.50	24.50	450.00
			0.00						
6' Side-Arm	C	None		0.0000	125.00	No Ice	10.60	10.60	140.00
(DNK-19)						1/2" Ice	15.40	15.40	212.00
*** D&K-18,20 and CSP on same mount									
*** D&K-15, 17,21 share mount									
2'6"x4" Pipe Mount	A	From Leg	0.50	0.0000	132.50	No Ice	0.75	0.75	27.00
(DNK-22)			0.00			1/2" Ice	0.95	0.95	35.41
			0.00						
2'6"x4" Pipe Mount	C	From Leg	0.50	0.0000	134.50	No Ice	0.75	0.75	27.00
(DNK-23)			0.00			1/2" Ice	0.95	0.95	35.41
			0.00						
Flash Beacon Lighting	A	None		0.0000	140.00	No Ice	2.70	2.70	50.00
(DNK-26)						1/2" Ice	3.10	3.10	70.00
Lightning Rod 1"x10'	A	None		0.0000	156.00	No Ice	1.00	1.00	40.00
(DNK-27)						1/2" Ice	2.02	2.02	49.26
L-810 Obstruction Lighting	A	From Leg	3.00	0.0000	70.00	No Ice	0.36	0.36	6.65
(1)			0.00			1/2" Ice	0.52	0.52	12.44
(Tower)			0.00						
L-810 Obstruction Lighting	C	From Leg	3.00	0.0000	70.00	No Ice	0.36	0.36	6.65
(1)			0.00			1/2" Ice	0.52	0.52	12.44
(Tower)			0.00						
*** PNS/Motorola Additions									
WPA-70063-2CF Panel	A	From Face	3.00	0.0000	140.00	No Ice	2.59	1.55	30.00
Antenna			0.00			1/2" Ice	2.83	1.87	48.64
(Tr. E P25 TX)			3.00						
432E-83I-01T TTA Unit	A	From Face	3.00	0.0000	140.00	No Ice	3.33	1.11	25.00
(Tr. E P25 TX/RX)			0.00			1/2" Ice	3.57	1.27	44.70
			0.00						
WPA-70063-2CF Panel	A	From Face	3.00	0.0000	140.00	No Ice	2.59	1.55	30.00

Description	Face or Leg	Offset Type	Offsets: Horz Lateral Vert ft ft ft	Azimuth Adjustment °	Placement ft		C_AA_A Front ft^2	C_AA_A Side ft^2	Weight lb
Antenna			0.00			1/2" Ice	2.83	1.87	48.64
(Tr. E P25 RX)			-3.00						
6' Side-Arm	A	None		0.0000	140.00	No Ice	10.60	10.60	140.00
(Tr. E P25 Antenna Mount)						1/2" Ice	15.40	15.40	212.00
*** Replacement of existing									
CSP-4 OGT9									
* TWM-018 Inventory									
Update									
Commscope SF-QV12-B	A	From Leg	0.50	0.0000	112.00	No Ice	17.06	8.28	415.00
Mount Frame			0.00			1/2" Ice	23.43	11.78	621.52
(T-Mobile - Proposed)			0.00						
Commscope SF-QV12-B	B	From Leg	0.50	0.0000	112.00	No Ice	17.06	8.28	415.00
Mount Frame			0.00			1/2" Ice	23.43	11.78	621.52
(T-Mobile - Proposed)			0.00						
Commscope SF-QV12-B	C	From Leg	0.50	0.0000	112.00	No Ice	17.06	8.28	415.00
Mount Frame			0.00			1/2" Ice	23.43	11.78	621.52
(T-Mobile - Proposed)			0.00						
RFS	A	From Leg	1.50	0.0000	112.00	No Ice	22.38	8.89	153.30
APXVAARR24_43-U-NA20			0.00			1/2" Ice	23.16	9.49	265.89
Panel Antenna			0.00						
(T-Mobile - Proposed)									
RFS	B	From Leg	1.50	0.0000	112.00	No Ice	22.38	8.89	153.30
APXVAARR24_43-U-NA20			0.00			1/2" Ice	23.16	9.49	265.89
Panel Antenna			0.00						
(T-Mobile - Proposed)									
RFS	C	From Leg	1.50	0.0000	112.00	No Ice	22.38	8.89	153.30
APXVAARR24_43-U-NA20			0.00			1/2" Ice	23.16	9.49	265.89
Panel Antenna			0.00						
(T-Mobile - Proposed)									
Ericsson 4449 B71 + B12	A	From Leg	1.50	0.0000	112.00	No Ice	1.93	1.35	80.00
Radio Unit			0.00			1/2" Ice	2.12	1.51	96.16
(T-Mobile - Proposed)			0.00						
Ericsson 4449 B71 + B12	B	From Leg	0.75	0.0000	112.00	No Ice	1.93	1.35	80.00
Radio Unit			0.00			1/2" Ice	2.12	1.51	96.16
(T-Mobile - Proposed)			0.00						
Ericsson 4449 B71 + B12	C	From Leg	0.75	0.0000	112.00	No Ice	1.93	1.35	80.00
Radio Unit			0.00			1/2" Ice	2.12	1.51	96.16
(T-Mobile - Proposed)			0.00						
Ericsson Radio 4415 B25	A	From Leg	0.75	0.0000	112.00	No Ice	2.17	0.96	50.00
RRH Unit			0.00			1/2" Ice	2.36	1.11	64.25
(T-Mobile - Proposed)			0.00						
Ericsson Radio 4415 B25	B	From Leg	0.75	0.0000	112.00	No Ice	2.17	0.96	50.00
RRH Unit			0.00			1/2" Ice	2.36	1.11	64.25
(T-Mobile - Proposed)			0.00						
Ericsson Radio 4415 B25	C	From Leg	0.75	0.0000	112.00	No Ice	2.17	0.96	50.00
RRH Unit			0.00			1/2" Ice	2.36	1.11	64.25
(T-Mobile - Proposed)			0.00						
Ericsson Radio 4415 B66A	A	From Leg	0.75	0.0000	112.00	No Ice	1.91	1.58	70.00
RRH			0.00			1/2" Ice	2.10	1.75	89.60
(T-Mobile - Proposed)			0.00						
Ericsson Radio 4415 B66A	B	From Leg	0.75	0.0000	112.00	No Ice	1.91	1.58	70.00
RRH			0.00			1/2" Ice	2.10	1.75	89.60
(T-Mobile - Proposed)			0.00						
Ericsson Radio 4415 B66A	C	From Leg	0.75	0.0000	112.00	No Ice	1.91	1.58	70.00
RRH			0.00			1/2" Ice	2.10	1.75	89.60
(T-Mobile - Proposed)			0.00						
* TWM-018 Inventory									

Description	Face or Leg	Offset Type	Offsets: Horz Lateral Vert ft ft ft	Azimuth Adjustment °	Placement ft		C_AA_A Front ft^2	C_AA_A Side ft^2	Weight lb
Update									
WPA-70063-2CF Panel Antenna	C	From Face	3.00 0.00 -3.00	0.0000	140.00	No Ice 1/2" Ice	2.22 2.42	1.45 1.74	30.00 48.64
(Tr. E P25 (Diversity) RX)									
SE419-SWBP2LDF(D00) Panel	C	From Face	3.00 0.00 0.00	0.0000	140.00	No Ice 1/2" Ice	4.15 5.14	9.89 10.66	30.00 80.36
(Tr. F P25 TX)									
432E-83I-01T TTA Unit	C	From Face	0.00 0.00 0.00	0.0000	140.00	No Ice 1/2" Ice	3.33 3.57	1.11 1.27	25.00 44.70
(Tr. F P25 TX/RX)									
(2) 6' Side-Arm (PSA6 - SitePro1)	B	None		0.0000	140.00	No Ice 1/2" Ice	10.60 15.40	10.60 15.40	140.00 212.00
(Tr. F P25 Antenna Mount)									
SC479-HF1LDF (D00I-E6085)	B	From Face	3.00 0.00 0.00	0.0000	128.00 - 140.00	No Ice 1/2" Ice	5.06 6.54	5.06 6.54	30.00 69.82
(Tr. F P25 Antenna)									
***Replacement of existing CSP-15 DB810									
SC479-HF1LDF (D00I-E6085)	B	From Face	6.50 0.00 0.00	0.0000	128.00 - 140.00	No Ice 1/2" Ice	5.06 6.54	5.06 6.54	30.00 69.82
(Tr. F P25 (Diversity) RX)									
*** Removal DNK-16									
*** Removal DNK-21									
*** Removal CSP									
*** Replacement of existing DNK-14									
*** Removal of DNK-18,-20,-24,-25 (7/2017)									
6'x4.5" OD Pipe Mount (CSP - Dish)	A	From Face	0.00 0.00 0.00	0.0000	134.00	No Ice 1/2" Ice	1.50 3.01	1.50 3.01	70.00 93.13
6'x4.5" OD Pipe Mount (Tr. E P25)	A	From Face	0.00 0.00 0.00	0.0000	140.00	No Ice 1/2" Ice	1.50 3.01	1.50 3.01	70.00 93.13
6'x4.5" OD Pipe Mount (Tr. E (Diversity) P25)	C	From Face	0.00 0.00 0.00	0.0000	140.00	No Ice 1/2" Ice	1.50 3.01	1.50 3.01	70.00 93.13

Dishes

Description	Face or Leg	Dish Type	Offset Type	Offsets: Horz Lateral Vert ft	Azimuth Adjustment °	3 dB Beam Width °	Elevation ft	Outside Diameter ft		Aperture Area ft^2	Weight lb
6' Dish w/ Radome (PA6-65)	A	Paraboloid w/Radome	From Leg	0.50 0.00 0.00	Worst		132.50	6.00	No Ice 1/2" Ice	28.27 29.07	240.00 290.00
(DNK-22)											
6' Dish w/ Radome (PA6-65)	C	Paraboloid w/Radome	From Leg	0.50 0.00 0.00	Worst		134.50	6.00	No Ice 1/2" Ice	28.27 29.07	240.00 290.00
(DNK-23)											

Description	Face or Leg	Dish Type	Offset Type	Offsets: Horz Lateral Vert ft	Azimuth Adjustment °	3 dB Beam Width °	Elevation ft	Outside Diameter ft		Aperture Area ft^2	Weight lb
Commscope PAR6-59W-PXA/A (CSP)	A	Paraboloid w/Radome	From Face	0.50 0.00 0.00	Worst		134.50	6.00	No Ice 1/2" Ice	28.27 29.07	310.00 460.00

Tower Pressures - No Ice

$G_H = 1.138$

Section Elevation ft	z ft	K_Z	q_z psf	A_G ft^2	Face	A_F ft^2	A_R ft^2	A_{leg} ft^2	Leg % 	C_AA_A In Face ft^2	C_AA_A Out Face ft^2
T1	130.00	1.48	31	128.333	A	14.996	6.667	6.667	30.78	24.570	0.000
140.00-120.00					B	11.174	6.667		37.37	0.000	0.000
					C	11.174	6.667		37.37	0.000	0.000
T2	110.00	1.411	29	129.583	A	15.378	9.167	9.167	37.35	28.441	0.000
120.00-100.00					B	9.650	15.137		36.98	0.000	0.000
					C	10.160	9.167		47.43	0.000	0.000
T3	90.00	1.332	28	155.908	A	39.903	0.000	23.369	58.57	38.100	0.000
100.00-80.00					B	34.649	9.950		52.40	0.000	0.000
					C	35.541	0.000		65.75	0.000	0.000
T4 80.00-60.00	70.00	1.24	26	194.781	A	41.971	0.000	24.204	57.67	45.076	0.000
					B	36.756	9.950		51.82	0.000	0.000
					C	37.513	0.000		64.52	0.000	0.000
T5 60.00-40.00	50.00	1.126	23	233.654	A	47.969	0.000	25.038	52.20	49.000	0.000
					B	43.602	9.950		46.76	0.000	0.000
					C	44.512	0.000		56.25	0.000	0.000
T6 40.00-20.00	30.00	1	21	272.528	A	50.825	0.000	25.873	50.91	49.000	0.000
					B	46.166	9.950		46.11	0.000	0.000
					C	47.002	0.000		55.05	0.000	0.000
T7 20.00-0.00	10.00	1	21	310.984	A	54.875	0.000	25.873	47.15	36.750	0.000
					B	51.588	7.462		43.82	0.000	0.000
					C	52.268	0.000		49.50	0.000	0.000

Tower Pressure - With Ice

$G_H = 1.138$

Section Elevation ft	z ft	K_Z	q_z psf	t_Z in	A_G ft^2	Face	A_F ft^2	A_R ft^2	A_{leg} ft^2	Leg % 	C_AA_A In Face ft^2	C_AA_A Out Face ft^2
T1	130.00	1.48	31	0.5000	130.000	A	16.057	13.528	10.000	33.80	42.010	0.000
140.00-120.00						B	11.174	15.587		37.37	0.000	0.000
						C	11.174	15.587		37.37	0.000	0.000
T2	110.00	1.411	29	0.5000	131.250	A	17.007	15.378	12.500	38.60	48.081	0.000
120.00-100.00						B	9.394	26.167		35.15	0.000	0.000
						C	10.160	17.580		45.06	0.000	0.000
T3 100.00-80.00	90.00	1.332	28	0.5000	157.577	A	43.127	3.140	25.595	55.32	65.040	0.000
						B	36.427	20.366		45.07	0.000	0.000
						C	37.767	6.086		58.37	0.000	0.000
T4 80.00-60.00	70.00	1.24	26	0.5000	196.450	A	45.142	3.731	26.430	54.08	78.416	0.000

Section Elevation ft	z ft	K_Z	q_z psf	t_Z in	A_G ft²	Face	A_F ft²	A_R ft²	A_{leg} ft²	Leg %	C_AA_A In Face ft²	C_AA_A Out Face ft²
						B	38.601	21.036		44.32	0.000	0.000
						C	39.739	6.655		56.97	0.000	0.000
T5 60.00-40.00	50.00	1.126	23	0.5000	235.323	A	50.382	4.747	27.264	49.46	85.940	0.000
						B	45.370	22.192		40.35	0.000	0.000
						C	46.738	7.790		50.00	0.000	0.000
T6 40.00-20.00	30.00	1	21	0.5000	274.196	A	53.497	4.942	28.099	48.08	85.940	0.000
						B	47.972	21.896		40.22	0.000	0.000
						C	49.228	7.385		49.63	0.000	0.000
T7 20.00-0.00	10.00	1	21	0.5000	312.652	A	57.251	6.448	28.099	44.11	64.455	0.000
						B	53.472	19.114		38.71	0.000	0.000
						C	54.494	8.220		44.81	0.000	0.000

Tower Pressure - Service

$G_H = 1.138$

Section Elevation ft	z ft	K_Z	q_z psf	A_G ft²	Face	A_F ft²	A_R ft²	A_{leg} ft²	Leg %	C_AA_A In Face ft²	C_AA_A Out Face ft²
T1	130.00	1.48	31	128.333	A	14.996	6.667	6.667	30.78	24.570	0.000
140.00-120.00					B	11.174	6.667		37.37	0.000	0.000
					C	11.174	6.667		37.37	0.000	0.000
T2	110.00	1.411	29	129.583	A	15.378	9.167	9.167	37.35	28.441	0.000
120.00-100.00					B	9.650	15.137		36.98	0.000	0.000
					C	10.160	9.167		47.43	0.000	0.000
T3	90.00	1.332	28	155.908	A	39.903	0.000	23.369	58.57	38.100	0.000
100.00-80.00					B	34.649	9.950		52.40	0.000	0.000
					C	35.541	0.000		65.75	0.000	0.000
T4 80.00-60.00	70.00	1.24	26	194.781	A	41.971	0.000	24.204	57.67	45.076	0.000
					B	36.756	9.950		51.82	0.000	0.000
					C	37.513	0.000		64.52	0.000	0.000
T5 60.00-40.00	50.00	1.126	23	233.654	A	47.969	0.000	25.038	52.20	49.000	0.000
					B	43.602	9.950		46.76	0.000	0.000
					C	44.512	0.000		56.25	0.000	0.000
T6 40.00-20.00	30.00	1	21	272.528	A	50.825	0.000	25.873	50.91	49.000	0.000
					B	46.166	9.950		46.11	0.000	0.000
					C	47.002	0.000		55.05	0.000	0.000
T7 20.00-0.00	10.00	1	21	310.984	A	54.875	0.000	25.873	47.15	36.750	0.000
					B	51.588	7.462		43.82	0.000	0.000
					C	52.268	0.000		49.50	0.000	0.000

Tower Forces - No Ice - Wind Normal To Face

Section Elevation ft	Add Weight lb	Self Weight lb	Face	e	C_F	R_R	D_F	D_R	A_E ft²	F lb	w plf	Ctrl. Face
T1	112.54	1284.97	A	0.169	2.704	0.585	1	1	18.893	2641.26	132.06	A
140.00-120.00			B	0.139	2.812	0.58	1	1	15.039			
			C	0.139	2.812	0.58	1	1	15.039			
T2	202.90	1928.30	A	0.189	2.632	0.588	1	1	20.771	2766.42	138.32	A

Section Elevation ft	Add Weight lb	Self Weight lb	Face	e	C_F	R_R	D_F	D_R	A_E ft^2	F lb	w plf	Ctrl. Face
120.00-100.00			B	0.191	2.625	0.589	1	1	18.560			
			C	0.149	2.775	0.581	1	1	15.489			
T3	284.80	3383.48	A	0.256	2.42	0.603	1	1	39.903	4232.75	211.64	A
100.00-80.00			B	0.286	2.334	0.612	1	1	40.736			
			C	0.228	2.505	0.597	1	1	35.541			
T4	305.92	3869.63	A	0.215	2.545	0.594	1	1	41.971	4443.82	222.19	A
80.00-60.00			B	0.24	2.468	0.599	1	1	42.720			
			C	0.193	2.621	0.589	1	1	37.513			
T5	317.80	4338.03	A	0.205	2.578	0.591	1	1	47.969	4595.14	229.76	B
60.00-40.00			B	0.229	2.501	0.597	1	1	49.540			
			C	0.191	2.628	0.589	1	1	44.512			
T6	317.80	4970.70	A	0.186	2.642	0.588	1	1	50.825	4324.96	216.25	A
40.00-20.00			B	0.206	2.576	0.592	1	1	52.053			
			C	0.172	2.691	0.585	1	1	47.002			
T7 20.00-0.00	238.35	5630.77	A	0.176	2.677	0.586	1	1	54.875	4341.85	217.09	B
			B	0.19	2.63	0.588	1	1	55.979			
			C	0.168	2.706	0.584	1	1	52.268			
Sum Weight:	1780.11	25405.88						OTM	1742.61 kip-ft	27346.20		

Tower Forces - No Ice - Wind 45 To Face

Section Elevation ft	Add Weight lb	Self Weight lb	Face	e	C_F	R_R	D_F	D_R	A_E ft^2	F lb	w plf	Ctrl. Face
T1	112.54	1284.97	A	0.169	2.704	0.585	0.825	1	16.268	2393.54	119.68	A
140.00-120.00			B	0.139	2.812	0.58	0.825	1	13.084			
			C	0.139	2.812	0.58	0.825	1	13.084			
T2	202.90	1928.30	A	0.189	2.632	0.588	0.825	1	18.080	2530.65	126.53	A
120.00-100.00			B	0.191	2.625	0.589	0.825	1	16.872			
			C	0.149	2.775	0.581	0.825	1	13.711			
T3	284.80	3383.48	A	0.256	2.42	0.603	0.825	1	32.920	3741.10	187.05	B
100.00-80.00			B	0.286	2.334	0.612	0.825	1	34.672			
			C	0.228	2.505	0.597	0.825	1	29.322			
T4	305.92	3869.63	A	0.215	2.545	0.594	0.825	1	34.626	3939.27	196.96	B
80.00-60.00			B	0.24	2.468	0.599	0.825	1	36.287			
			C	0.193	2.621	0.589	0.825	1	30.948			
T5	317.80	4338.03	A	0.205	2.578	0.591	0.825	1	39.574	4087.94	204.40	B
60.00-40.00			B	0.229	2.501	0.597	0.825	1	41.910			
			C	0.191	2.628	0.589	0.825	1	36.723			
T6	317.80	4970.70	A	0.186	2.642	0.588	0.825	1	41.931	3830.00	191.50	B
40.00-20.00			B	0.206	2.576	0.592	0.825	1	43.974			
			C	0.172	2.691	0.585	0.825	1	38.777			
T7 20.00-0.00	238.35	5630.77	A	0.176	2.677	0.586	0.825	1	45.272	3781.49	189.07	B
			B	0.19	2.63	0.588	0.825	1	46.951			
			C	0.168	2.706	0.584	0.825	1	43.121			
Sum Weight:	1780.11	25405.88						OTM	1559.09 kip-ft	24304.01		

Tower Forces - No Ice - Wind 60 To Face

Section Elevation ft	Add Weight lb	Self Weight lb	Face	e	C_F	R_R	D_F	D_R	A_E ft^2	F lb	w plf	Ctrl. Face
T1	112.54	1284.97	A	0.169	2.704	0.585	0.8	1	15.893	2358.15	117.91	A
140.00-120.00			B	0.139	2.812	0.58	0.8	1	12.805			
			C	0.139	2.812	0.58	0.8	1	12.805			
T2	202.90	1928.30	A	0.189	2.632	0.588	0.8	1	17.695	2496.97	124.85	A
120.00-100.00			B	0.191	2.625	0.589	0.8	1	16.630			
			C	0.149	2.775	0.581	0.8	1	13.457			
T3	284.80	3383.48	A	0.256	2.42	0.603	0.8	1	31.922	3677.55	183.88	B
100.00-80.00			B	0.286	2.334	0.612	0.8	1	33.806			
			C	0.228	2.505	0.597	0.8	1	28.433			
T4	305.92	3869.63	A	0.215	2.545	0.594	0.8	1	33.577	3872.91	193.65	B
80.00-60.00			B	0.24	2.468	0.599	0.8	1	35.368			
			C	0.193	2.621	0.589	0.8	1	30.011			
T5	317.80	4338.03	A	0.205	2.578	0.591	0.8	1	38.375	4015.48	200.77	B
60.00-40.00			B	0.229	2.501	0.597	0.8	1	40.819			
			C	0.191	2.628	0.589	0.8	1	35.610			
T6	317.80	4970.70	A	0.186	2.642	0.588	0.8	1	40.660	3759.83	187.99	B
40.00-20.00			B	0.206	2.576	0.592	0.8	1	42.820			
			C	0.172	2.691	0.585	0.8	1	37.602			
T7 20.00-0.00	238.35	5630.77	A	0.176	2.677	0.586	0.8	1	43.900	3701.44	185.07	B
			B	0.19	2.63	0.588	0.8	1	45.661			
			C	0.168	2.706	0.584	0.8	1	41.815			
Sum Weight:	1780.11	25405.88						OTM	1533.89 kip-ft	23882.35		

Tower Forces - No Ice - Wind 90 To Face

Section Elevation ft	Add Weight lb	Self Weight lb	Face	e	C_F	R_R	D_F	D_R	A_E ft^2	F lb	w plf	Ctrl. Face
T1	112.54	1284.97	A	0.169	2.704	0.585	0.85	1	16.643	2428.93	121.45	A
140.00-120.00			B	0.139	2.812	0.58	0.85	1	13.363			
			C	0.139	2.812	0.58	0.85	1	13.363			
T2	202.90	1928.30	A	0.189	2.632	0.588	0.85	1	18.464	2564.34	128.22	A
120.00-100.00			B	0.191	2.625	0.589	0.85	1	17.113			
			C	0.149	2.775	0.581	0.85	1	13.965			
T3	284.80	3383.48	A	0.256	2.42	0.603	0.85	1	33.918	3804.64	190.23	B
100.00-80.00			B	0.286	2.334	0.612	0.85	1	35.539			
			C	0.228	2.505	0.597	0.85	1	30.210			
T4	305.92	3869.63	A	0.215	2.545	0.594	0.85	1	35.675	4005.63	200.28	B
80.00-60.00			B	0.24	2.468	0.599	0.85	1	37.206			
			C	0.193	2.621	0.589	0.85	1	31.886			
T5	317.80	4338.03	A	0.205	2.578	0.591	0.85	1	40.774	4160.40	208.02	B
60.00-40.00			B	0.229	2.501	0.597	0.85	1	43.000			
			C	0.191	2.628	0.589	0.85	1	37.835			
T6	317.80	4970.70	A	0.186	2.642	0.588	0.85	1	43.202	3900.18	195.01	B
40.00-20.00			B	0.206	2.576	0.592	0.85	1	45.128			
			C	0.172	2.691	0.585	0.85	1	39.952			
T7 20.00-0.00	238.35	5630.77	A	0.176	2.677	0.586	0.85	1	46.644	3861.55	193.08	B
			B	0.19	2.63	0.588	0.85	1	48.241			
			C	0.168	2.706	0.584	0.85	1	44.428			
Sum Weight:	1780.11	25405.88						OTM	1584.29 kip-ft	24725.66		

Tower Forces - With Ice - Wind Normal To Face

Section Elevation ft	Add Weight lb	Self Weight lb	Face	e	C_F	R_R	D_F	D_R	A_E ft^2	F lb	w plf	Ctrl. Face
T1	378.30	1767.22	A	0.228	2.506	0.596	1	1	24.125	3578.14	178.91	A
140.00-120.00			B	0.206	2.577	0.592	1	1	20.395			
			C	0.206	2.577	0.592	1	1	20.395			
T2	570.17	2401.72	A	0.247	2.447	0.601	1	1	26.250	3739.03	186.95	A
120.00-100.00			B	0.271	2.376	0.607	1	1	25.289			
			C	0.211	2.559	0.593	1	1	20.581			
T3	769.87	4110.43	A	0.294	2.313	0.614	1	1	45.055	5378.38	268.92	B
100.00-80.00			B	0.36	2.148	0.636	1	1	49.385			
			C	0.278	2.355	0.609	1	1	41.476			
T4	853.15	4643.80	A	0.249	2.441	0.602	1	1	47.386	5744.52	287.23	B
80.00-60.00			B	0.304	2.287	0.617	1	1	51.581			
			C	0.236	2.48	0.598	1	1	43.721			
T5	900.00	5309.32	A	0.234	2.486	0.598	1	1	53.220	5935.32	296.77	B
60.00-40.00			B	0.287	2.331	0.612	1	1	58.952			
			C	0.232	2.493	0.597	1	1	51.391			
T6	900.00	6000.75	A	0.213	2.553	0.593	1	1	56.428	5526.54	276.33	B
40.00-20.00			B	0.255	2.423	0.603	1	1	61.178			
			C	0.206	2.575	0.592	1	1	53.598			
T7 20.00-0.00	675.00	6819.73	A	0.204	2.584	0.591	1	1	61.063	5337.51	266.88	B
			B	0.232	2.492	0.597	1	1	64.892			
			C	0.201	2.594	0.591	1	1	59.348			
Sum Weight:	5046.49	31052.96						OTM	2278.56 kip-ft	35239.44		

Tower Forces - With Ice - Wind 45 To Face

Section Elevation ft	Add Weight lb	Self Weight lb	Face	e	C_F	R_R	D_F	D_R	A_E ft^2	F lb	w plf	Ctrl. Face
T1	378.30	1767.22	A	0.228	2.506	0.596	0.825	1	21.315	3332.22	166.61	A
140.00-120.00			B	0.206	2.577	0.592	0.825	1	18.440			
			C	0.206	2.577	0.592	0.825	1	18.440			
T2	570.17	2401.72	A	0.247	2.447	0.601	0.825	1	23.274	3496.56	174.83	A
120.00-100.00			B	0.271	2.376	0.607	0.825	1	23.645			
			C	0.211	2.559	0.593	0.825	1	18.803			
T3	769.87	4110.43	A	0.294	2.313	0.614	0.825	1	37.508	4948.03	247.40	B
100.00-80.00			B	0.36	2.148	0.636	0.825	1	43.010			
			C	0.278	2.355	0.609	0.825	1	34.867			
T4	853.15	4643.80	A	0.249	2.441	0.602	0.825	1	39.486	5292.64	264.63	B
80.00-60.00			B	0.304	2.287	0.617	0.825	1	44.825			
			C	0.236	2.48	0.598	0.825	1	36.767			
T5	900.00	5309.32	A	0.234	2.486	0.598	0.825	1	44.403	5443.52	272.18	B
60.00-40.00			B	0.287	2.331	0.612	0.825	1	51.013			
			C	0.232	2.493	0.597	0.825	1	43.212			
T6	900.00	6000.75	A	0.213	2.553	0.593	0.825	1	47.066	5046.47	252.32	B
40.00-20.00			B	0.255	2.423	0.603	0.825	1	52.783			
			C	0.206	2.575	0.592	0.825	1	44.983			
T7 20.00-0.00	675.00	6819.73	A	0.204	2.584	0.591	0.825	1	51.044	4787.18	239.36	B
			B	0.232	2.492	0.597	0.825	1	55.535			
			C	0.201	2.594	0.591	0.825	1	49.811			

Section Elevation ft	Add Weight lb	Self Weight lb	Face	e	C_F	R_R	D_F	D_R	A_E ft^2	F lb	w plf	Ctrl. Face
Sum Weight:	5046.49	31052.96						OTM	2105.06 kip-ft	32346.62		

Tower Forces - With Ice - Wind 60 To Face

Section Elevation ft	Add Weight lb	Self Weight lb	Face	e	C_F	R_R	D_F	D_R	A_E ft^2	F lb	w plf	Ctrl. Face
T1	378.30	1767.22	A	0.228	2.506	0.596	0.8	1	20.914	3297.09	164.85	A
140.00-120.00			B	0.206	2.577	0.592	0.8	1	18.160			
			C	0.206	2.577	0.592	0.8	1	18.160			
T2	570.17	2401.72	A	0.247	2.447	0.601	0.8	1	22.848	3461.93	173.10	A
120.00-100.00			B	0.271	2.376	0.607	0.8	1	23.410			
			C	0.211	2.559	0.593	0.8	1	18.549			
T3	769.87	4110.43	A	0.294	2.313	0.614	0.8	1	36.429	4886.55	244.33	B
100.00-80.00			B	0.36	2.148	0.636	0.8	1	42.099			
			C	0.278	2.355	0.609	0.8	1	33.923			
T4	853.15	4643.80	A	0.249	2.441	0.602	0.8	1	38.358	5228.09	261.40	B
80.00-60.00			B	0.304	2.287	0.617	0.8	1	43.860			
			C	0.236	2.48	0.598	0.8	1	35.774			
T5	900.00	5309.32	A	0.234	2.486	0.598	0.8	1	43.144	5373.27	268.66	B
60.00-40.00			B	0.287	2.331	0.612	0.8	1	49.878			
			C	0.232	2.493	0.597	0.8	1	42.044			
T6	900.00	6000.75	A	0.213	2.553	0.593	0.8	1	45.729	4977.89	248.89	B
40.00-20.00			B	0.255	2.423	0.603	0.8	1	51.583			
			C	0.206	2.575	0.592	0.8	1	43.752			
T7 20.00-0.00	675.00	6819.73	A	0.204	2.584	0.591	0.8	1	49.613	4708.56	235.43	B
			B	0.232	2.492	0.597	0.8	1	54.198			
			C	0.201	2.594	0.591	0.8	1	48.449			
Sum Weight:	5046.49	31052.96						OTM	2080.27 kip-ft	31933.36		

Tower Forces - With Ice - Wind 90 To Face

Section Elevation ft	Add Weight lb	Self Weight lb	Face	e	C_F	R_R	D_F	D_R	A_E ft^2	F lb	w plf	Ctrl. Face
T1	378.30	1767.22	A	0.228	2.506	0.596	0.85	1	21.717	3367.35	168.37	A
140.00-120.00			B	0.206	2.577	0.592	0.85	1	18.719			
			C	0.206	2.577	0.592	0.85	1	18.719			
T2	570.17	2401.72	A	0.247	2.447	0.601	0.85	1	23.699	3531.20	176.56	A
120.00-100.00			B	0.271	2.376	0.607	0.85	1	23.880			
			C	0.211	2.559	0.593	0.85	1	19.057			
T3	769.87	4110.43	A	0.294	2.313	0.614	0.85	1	38.586	5009.51	250.48	B
100.00-80.00			B	0.36	2.148	0.636	0.85	1	43.921			
			C	0.278	2.355	0.609	0.85	1	35.811			
T4	853.15	4643.80	A	0.249	2.441	0.602	0.85	1	40.615	5357.20	267.86	B
80.00-60.00			B	0.304	2.287	0.617	0.85	1	45.790			
			C	0.236	2.48	0.598	0.85	1	37.761			

Section Elevation ft	Add Weight lb	Self Weight lb	Face	e	C_F	R_R	D_F	D_R	A_E ft^2	F lb	w plf	Ctrl. Face
T5	900.00	5309.32	A	0.234	2.486	0.598	0.85	1	45.663	5513.78	275.69	B
60.00-40.00			B	0.287	2.331	0.612	0.85	1	52.147			
			C	0.232	2.493	0.597	0.85	1	44.381			
T6	900.00	6000.75	A	0.213	2.553	0.593	0.85	1	48.404	5115.05	255.75	B
40.00-20.00			B	0.255	2.423	0.603	0.85	1	53.982			
			C	0.206	2.575	0.592	0.85	1	46.214			
T7 20.00-0.00	675.00	6819.73	A	0.204	2.584	0.591	0.85	1	52.476	4865.80	243.29	B
			B	0.232	2.492	0.597	0.85	1	56.871			
			C	0.201	2.594	0.591	0.85	1	51.174			
Sum Weight:	5046.49	31052.96						OTM	2129.85 kip-ft	32759.88		

Tower Forces - Service - Wind Normal To Face

Section Elevation ft	Add Weight lb	Self Weight lb	Face	e	C_F	R_R	D_F	D_R	A_E ft^2	F lb	w plf	Ctrl. Face
T1	112.54	1284.97	A	0.169	2.704	0.585	1	1	18.893	2641.26	132.06	A
140.00-120.00			B	0.139	2.812	0.58	1	1	15.039			
			C	0.139	2.812	0.58	1	1	15.039			
T2	202.90	1928.30	A	0.189	2.632	0.588	1	1	20.771	2766.42	138.32	A
120.00-100.00			B	0.191	2.625	0.589	1	1	18.560			
			C	0.149	2.775	0.581	1	1	15.489			
T3	284.80	3383.48	A	0.256	2.42	0.603	1	1	39.903	4232.75	211.64	A
100.00-80.00			B	0.286	2.334	0.612	1	1	40.736			
			C	0.228	2.505	0.597	1	1	35.541			
T4	305.92	3869.63	A	0.215	2.545	0.594	1	1	41.971	4443.82	222.19	A
80.00-60.00			B	0.24	2.468	0.599	1	1	42.720			
			C	0.193	2.621	0.589	1	1	37.513			
T5	317.80	4338.03	A	0.205	2.578	0.591	1	1	47.969	4595.14	229.76	B
60.00-40.00			B	0.229	2.501	0.597	1	1	49.540			
			C	0.191	2.628	0.589	1	1	44.512			
T6	317.80	4970.70	A	0.186	2.642	0.588	1	1	50.825	4324.96	216.25	A
40.00-20.00			B	0.206	2.576	0.592	1	1	52.053			
			C	0.172	2.691	0.585	1	1	47.002			
T7 20.00-0.00	238.35	5630.77	A	0.176	2.677	0.586	1	1	54.875	4341.85	217.09	B
			B	0.19	2.63	0.588	1	1	55.979			
			C	0.168	2.706	0.584	1	1	52.268			
Sum Weight:	1780.11	25405.88						OTM	1742.61 kip-ft	27346.20		

Tower Forces - Service - Wind 45 To Face

Section Elevation ft	Add Weight lb	Self Weight lb	Face	e	C_F	R_R	D_F	D_R	A_E ft^2	F lb	w plf	Ctrl. Face
T1	112.54	1284.97	A	0.169	2.704	0.585	0.825	1	16.268	2393.54	119.68	A
140.00-120.00			B	0.139	2.812	0.58	0.825	1	13.084			
			C	0.139	2.812	0.58	0.825	1	13.084			

Section Elevation ft	Add Weight lb	Self Weight lb	Face	e	C_F	R_R	D_F	D_R	A_E ft^2	F lb	w plf	Ctrl. Face
T2	202.90	1928.30	A	0.189	2.632	0.588	0.825	1	18.080	2530.65	126.53	A
120.00-100.00			B	0.191	2.625	0.589	0.825	1	16.872			
			C	0.149	2.775	0.581	0.825	1	13.711			
T3	284.80	3383.48	A	0.256	2.42	0.603	0.825	1	32.920	3741.10	187.05	B
100.00-80.00			B	0.286	2.334	0.612	0.825	1	34.672			
			C	0.228	2.505	0.597	0.825	1	29.322			
T4	305.92	3869.63	A	0.215	2.545	0.594	0.825	1	34.626	3939.27	196.96	B
80.00-60.00			B	0.24	2.468	0.599	0.825	1	36.287			
			C	0.193	2.621	0.589	0.825	1	30.948			
T5	317.80	4338.03	A	0.205	2.578	0.591	0.825	1	39.574	4087.94	204.40	B
60.00-40.00			B	0.229	2.501	0.597	0.825	1	41.910			
			C	0.191	2.628	0.589	0.825	1	36.723			
T6	317.80	4970.70	A	0.186	2.642	0.588	0.825	1	41.931	3830.00	191.50	B
40.00-20.00			B	0.206	2.576	0.592	0.825	1	43.974			
			C	0.172	2.691	0.585	0.825	1	38.777			
T7 20.00-0.00	238.35	5630.77	A	0.176	2.677	0.586	0.825	1	45.272	3781.49	189.07	B
			B	0.19	2.63	0.588	0.825	1	46.951			
			C	0.168	2.706	0.584	0.825	1	43.121			
Sum Weight:	1780.11	25405.88						OTM	1559.09 kip-ft	24304.01		

Tower Forces - Service - Wind 60 To Face

Section Elevation ft	Add Weight lb	Self Weight lb	Face	e	C_F	R_R	D_F	D_R	A_E ft^2	F lb	w plf	Ctrl. Face
T1	112.54	1284.97	A	0.169	2.704	0.585	0.8	1	15.893	2358.15	117.91	A
140.00-120.00			B	0.139	2.812	0.58	0.8	1	12.805			
			C	0.139	2.812	0.58	0.8	1	12.805			
T2	202.90	1928.30	A	0.189	2.632	0.588	0.8	1	17.695	2496.97	124.85	A
120.00-100.00			B	0.191	2.625	0.589	0.8	1	16.630			
			C	0.149	2.775	0.581	0.8	1	13.457			
T3	284.80	3383.48	A	0.256	2.42	0.603	0.8	1	31.922	3677.55	183.88	B
100.00-80.00			B	0.286	2.334	0.612	0.8	1	33.806			
			C	0.228	2.505	0.597	0.8	1	28.433			
T4	305.92	3869.63	A	0.215	2.545	0.594	0.8	1	33.577	3872.91	193.65	B
80.00-60.00			B	0.24	2.468	0.599	0.8	1	35.368			
			C	0.193	2.621	0.589	0.8	1	30.011			
T5	317.80	4338.03	A	0.205	2.578	0.591	0.8	1	38.375	4015.48	200.77	B
60.00-40.00			B	0.229	2.501	0.597	0.8	1	40.819			
			C	0.191	2.628	0.589	0.8	1	35.610			
T6	317.80	4970.70	A	0.186	2.642	0.588	0.8	1	40.660	3759.83	187.99	B
40.00-20.00			B	0.206	2.576	0.592	0.8	1	42.820			
			C	0.172	2.691	0.585	0.8	1	37.602			
T7 20.00-0.00	238.35	5630.77	A	0.176	2.677	0.586	0.8	1	43.900	3701.44	185.07	B
			B	0.19	2.63	0.588	0.8	1	45.661			
			C	0.168	2.706	0.584	0.8	1	41.815			
Sum Weight:	1780.11	25405.88						OTM	1533.89 kip-ft	23882.35		

Tower Forces - Service - Wind 90 To Face

Section Elevation ft	Add Weight lb	Self Weight lb	Face	e	C_F	R_R	D_F	D_R	A_E ft^2	F lb	w plf	Ctrl. Face
T1	112.54	1284.97	A	0.169	2.704	0.585	0.85	1	16.643	2428.93	121.45	A
140.00-120.00			B	0.139	2.812	0.58	0.85	1	13.363			
			C	0.139	2.812	0.58	0.85	1	13.363			
T2	202.90	1928.30	A	0.189	2.632	0.588	0.85	1	18.464	2564.34	128.22	A
120.00-100.00			B	0.191	2.625	0.589	0.85	1	17.113			
			C	0.149	2.775	0.581	0.85	1	13.965			
T3	284.80	3383.48	A	0.256	2.42	0.603	0.85	1	33.918	3804.64	190.23	B
100.00-80.00			B	0.286	2.334	0.612	0.85	1	35.539			
			C	0.228	2.505	0.597	0.85	1	30.210			
T4	305.92	3869.63	A	0.215	2.545	0.594	0.85	1	35.675	4005.63	200.28	B
80.00-60.00			B	0.24	2.468	0.599	0.85	1	37.206			
			C	0.193	2.621	0.589	0.85	1	31.886			
T5	317.80	4338.03	A	0.205	2.578	0.591	0.85	1	40.774	4160.40	208.02	B
60.00-40.00			B	0.229	2.501	0.597	0.85	1	43.000			
			C	0.191	2.628	0.589	0.85	1	37.835			
T6	317.80	4970.70	A	0.186	2.642	0.588	0.85	1	43.202	3900.18	195.01	B
40.00-20.00			B	0.206	2.576	0.592	0.85	1	45.128			
			C	0.172	2.691	0.585	0.85	1	39.952			
T7 20.00-0.00	238.35	5630.77	A	0.176	2.677	0.586	0.85	1	46.644	3861.55	193.08	B
			B	0.19	2.63	0.588	0.85	1	48.241			
			C	0.168	2.706	0.584	0.85	1	44.428			
Sum Weight:	1780.11	25405.88						OTM	1584.29 kip-ft	24725.66		

Discrete Appurtenance Pressures - No Ice $G_H = 1.138$

Description	Aiming Azimuth °	Weight lb	$Offset_x$ ft	$Offset_z$ ft	z ft	K_z	q_z psf	C_AA_C Front ft^2	C_AA_C Side ft^2
DB438	0.0000	7.00	0.00	0.00	60.00	1.186	25	0.77	0.23
531-70 Dipole	120.0000	40.00	9.14	5.28	65.00	1.214	25	3.23	2.63
5' Side-Arm	0.0000	140.00	0.00	0.00	65.00	1.214	25	10.60	10.60
PR-950	240.0000	38.00	-4.52	2.61	80.00	1.288	27	6.35	6.35
2'6"x4" Pipe Mount	0.0000	27.00	0.00	0.00	80.00	1.288	27	0.75	0.75
DB222-A	120.0000	16.00	7.45	4.30	82.00	1.297	27	1.60	1.60
4' Side Mount Standoff	0.0000	50.00	0.00	0.00	81.00	1.292	27	2.72	2.72
DB438	120.0000	7.00	4.38	2.53	83.00	1.302	27	0.77	0.23
DB586-Y (inverted)	240.0000	8.25	-8.56	4.94	95.00	1.353	28	1.01	1.01
6' Side Mount Standoff	0.0000	70.00	0.00	0.00	102.00	1.380	29	4.97	4.97
432E-83I-01T TTA Unit	240.0000	25.00	-5.72	3.30	102.00	1.380	29	3.33	1.11
DB586-Y	240.0000	8.25	-8.32	4.80	108.00	1.403	29	1.01	1.01
DB224-A	0.0000	32.00	0.00	-4.11	106.00	1.396	29	3.15	3.15
DB222-A (inverted)	180.0000	16.00	0.00	8.42	97.00	1.361	28	1.60	1.60
8' Side Arm	165.0000	325.00	3.13	1.80	102.00	1.380	29	17.20	17.20
8' Side Arm	195.0000	325.00	-3.13	1.80	102.00	1.380	29	17.20	17.20
SC479-HF1LDF (inverted)	180.0000	30.00	0.00	8.32	107.00	1.399	29	5.06	5.06
8' Side Arm	165.0000	325.00	3.13	1.80	118.00	1.439	30	17.20	17.20
8' Side Arm	195.0000	325.00	-3.13	1.80	118.00	1.439	30	17.20	17.20
8' Side Arm	45.0000	325.00	0.00	-3.61	118.00	1.439	30	17.20	17.20
8' Side Arm	75.0000	325.00	3.13	1.80	118.00	1.439	30	17.20	17.20
6' Side-Arm	0.0000	140.00	0.00	0.00	125.00	1.463	30	10.60	10.60
2'6"x4" Pipe Mount	0.0000	27.00	0.00	-4.11	132.50	1.488	31	0.75	0.75
2'6"x4" Pipe Mount	240.0000	27.00	-3.56	2.05	134.50	1.494	31	0.75	0.75
Flash Beacon Lighting	0.0000	50.00	0.00	0.00	140.00	1.511	31	2.70	2.70

Description	Aiming Azimuth °	Weight lb	$Offset_x$ ft	$Offset_z$ ft	z ft	K_z	q_z psf	C_AA_C Front ft^2	C_AA_C Side ft^2
Lightning Rod 1"x10'	0.0000	40.00	0.00	0.00	156.00	1.559	32	1.00	1.00
L-810 Obstruction Lighting (1)	0.0000	6.65	0.00	-8.27	70.00	1.240	26	0.36	0.36
L-810 Obstruction Lighting (1)	240.0000	6.65	-7.17	4.14	70.00	1.240	26	0.36	0.36
WPA-70063-2CF Panel Antenna	300.0000	30.00	-4.16	-2.40	143.00	1.520	32	2.59	1.55
432E-83I-01T TTA Unit	300.0000	25.00	-4.16	-2.40	140.00	1.511	31	3.33	1.11
WPA-70063-2CF Panel Antenna	300.0000	30.00	-4.16	-2.40	137.00	1.502	31	2.59	1.55
6' Side-Arm	0.0000	140.00	0.00	0.00	140.00	1.511	31	10.60	10.60
Commscope SF-QV12-B Mount Frame	0.0000	415.00	0.00	-4.11	112.00	1.418	29	17.06	8.28
Commscope SF-QV12-B Mount Frame	120.0000	415.00	3.56	2.05	112.00	1.418	29	17.06	8.28
Commscope SF-QV12-B Mount Frame	240.0000	415.00	-3.56	2.05	112.00	1.418	29	17.06	8.28
RFS APXVAARR24_43-U-NA20 Panel Antenna	0.0000	153.30	0.00	-5.11	112.00	1.418	29	22.38	8.89
RFS APXVAARR24_43-U-NA20 Panel Antenna	120.0000	153.30	4.42	2.55	112.00	1.418	29	22.38	8.89
RFS APXVAARR24_43-U-NA20 Panel Antenna	240.0000	153.30	-4.42	2.55	112.00	1.418	29	22.38	8.89
Ericsson 4449 B71 + B12 Radio Unit	0.0000	80.00	0.00	-5.11	112.00	1.418	29	1.93	1.35
Ericsson 4449 B71 + B12 Radio Unit	120.0000	80.00	3.77	2.18	112.00	1.418	29	1.93	1.35
Ericsson 4449 B71 + B12 Radio Unit	240.0000	80.00	-3.77	2.18	112.00	1.418	29	1.93	1.35
Ericsson Radio 4415 B25 RRH Unit	0.0000	50.00	0.00	-4.36	112.00	1.418	29	2.17	0.96
Ericsson Radio 4415 B25 RRH Unit	120.0000	50.00	3.77	2.18	112.00	1.418	29	2.17	0.96
Ericsson Radio 4415 B25 RRH Unit	240.0000	50.00	-3.77	2.18	112.00	1.418	29	2.17	0.96
Ericsson Radio 4415 B66A RRH	0.0000	70.00	0.00	-4.36	112.00	1.418	29	1.91	1.58
Ericsson Radio 4415 B66A RRH	120.0000	70.00	3.77	2.18	112.00	1.418	29	1.91	1.58
Ericsson Radio 4415 B66A RRH	240.0000	70.00	-3.77	2.18	112.00	1.418	29	1.91	1.58
WPA-70063-2CF Panel Antenna	180.0000	30.00	0.00	4.80	137.00	1.502	31	2.22	1.45
SE419-SWBP2LDF(D00) Panel	180.0000	30.00	0.00	4.80	140.00	1.511	31	4.15	9.89
432E-83I-01T TTA Unit	180.0000	25.00	0.00	1.80	140.00	1.511	31	3.33	1.11
6' Side-Arm (PSA6 - SitePro1)	0.0000	280.00	0.00	0.00	140.00	1.511	31	21.20	21.20
SC479-HF1LDF (D00I-E6085)	60.0000	30.00	4.16	-2.40	134.00	1.492	31	5.06	5.06
SC479-HF1LDF (D00I-E6085)	60.0000	30.00	7.19	-4.15	134.00	1.492	31	5.06	5.06
6'x4.5" OD Pipe Mount	300.0000	70.00	-1.56	-0.90	134.00	1.492	31	1.50	1.50
6'x4.5" OD Pipe Mount	300.0000	70.00	-1.56	-0.90	140.00	1.511	31	1.50	1.50
6'x4.5" OD Pipe Mount	180.0000	70.00	0.00	1.80	140.00	1.511	31	1.50	1.50
	Sum Weight:	5926.70							

Discrete Appurtenance Pressures - With Ice $G_H = 1.138$

Description	Aiming Azimuth °	Weight lb	$Offset_x$ ft	$Offset_z$ ft	z ft	K_z	q_z psf	C_AA_C Front ft^2	C_AA_C Side ft^2	t_z in
DB438	0.0000	10.82	0.00	0.00	60.00	1.186	25	0.97	0.54	0.5000
531-70 Dipole	120.0000	56.93	9.14	5.28	65.00	1.214	25	5.00	4.39	0.5000
5' Side-Arm	0.0000	212.00	0.00	0.00	65.00	1.214	25	15.40	15.40	0.5000
PR-950	240.0000	49.40	-4.52	2.61	80.00	1.288	27	11.43	11.43	0.5000
2'6"x4" Pipe Mount	0.0000	35.41	0.00	0.00	80.00	1.288	27	0.95	0.95	0.5000
DB222-A	120.0000	20.80	7.45	4.30	82.00	1.297	27	2.88	2.88	0.5000
4' Side Mount Standoff	0.0000	89.00	0.00	0.00	81.00	1.292	27	4.91	4.91	0.5000
DB438	120.0000	10.82	4.38	2.53	83.00	1.302	27	0.97	0.54	0.5000
DB586-Y (inverted)	240.0000	16.59	-8.56	4.94	95.00	1.353	28	1.28	1.28	0.5000
6' Side Mount Standoff	0.0000	130.00	0.00	0.00	102.00	1.380	29	6.12	6.12	0.5000
432E-83I-01T TTA Unit	240.0000	44.70	-5.72	3.30	102.00	1.380	29	3.57	1.27	0.5000
DB586-Y	240.0000	16.59	-8.32	4.80	108.00	1.403	29	1.28	1.28	0.5000
DB224-A	0.0000	41.60	0.00	-4.11	106.00	1.396	29	5.67	5.67	0.5000
DB222-A (inverted)	180.0000	20.80	0.00	8.42	97.00	1.361	28	2.88	2.88	0.5000
8' Side Arm	165.0000	450.00	3.13	1.80	102.00	1.380	29	24.50	24.50	0.5000
8' Side Arm	195.0000	450.00	-3.13	1.80	102.00	1.380	29	24.50	24.50	0.5000
SC479-HF1LDF (inverted)	180.0000	69.82	0.00	8.32	107.00	1.399	29	6.54	6.54	0.5000
8' Side Arm	165.0000	450.00	3.13	1.80	118.00	1.439	30	24.50	24.50	0.5000
8' Side Arm	195.0000	450.00	-3.13	1.80	118.00	1.439	30	24.50	24.50	0.5000
8' Side Arm	45.0000	450.00	0.00	-3.61	118.00	1.439	30	24.50	24.50	0.5000
8' Side Arm	75.0000	450.00	3.13	1.80	118.00	1.439	30	24.50	24.50	0.5000
6' Side-Arm	0.0000	212.00	0.00	0.00	125.00	1.463	30	15.40	15.40	0.5000
2'6"x4" Pipe Mount	0.0000	35.41	0.00	-4.11	132.50	1.488	31	0.95	0.95	0.5000
2'6"x4" Pipe Mount	240.0000	35.41	-3.56	2.05	134.50	1.494	31	0.95	0.95	0.5000
Flash Beacon Lighting	0.0000	70.00	0.00	0.00	140.00	1.511	31	3.10	3.10	0.5000
Lightning Rod 1"x10'	0.0000	49.26	0.00	0.00	156.00	1.559	32	2.02	2.02	0.5000
L-810 Obstruction Lighting (1)	0.0000	12.44	0.00	-8.27	70.00	1.240	26	0.52	0.52	0.5000
L-810 Obstruction Lighting (1)	240.0000	12.44	-7.17	4.14	70.00	1.240	26	0.52	0.52	0.5000
WPA-70063-2CF Panel Antenna	300.0000	48.64	-4.16	-2.40	143.00	1.520	32	2.83	1.87	0.5000
432E-83I-01T TTA Unit	300.0000	44.70	-4.16	-2.40	140.00	1.511	31	3.57	1.27	0.5000
WPA-70063-2CF Panel Antenna	300.0000	48.64	-4.16	-2.40	137.00	1.502	31	2.83	1.87	0.5000
6' Side-Arm	0.0000	212.00	0.00	0.00	140.00	1.511	31	15.40	15.40	0.5000
Commscope SF-QV12-B Mount Frame	0.0000	621.52	0.00	-4.11	112.00	1.418	29	23.43	11.78	0.5000
Commscope SF-QV12-B Mount Frame	120.0000	621.52	3.56	2.05	112.00	1.418	29	23.43	11.78	0.5000
Commscope SF-QV12-B Mount Frame	240.0000	621.52	-3.56	2.05	112.00	1.418	29	23.43	11.78	0.5000
RFS APXVAARR24_43-U-NA20 Panel Antenna	0.0000	265.89	0.00	-5.11	112.00	1.418	29	23.16	9.49	0.5000
RFS APXVAARR24_43-U-NA20 Panel Antenna	120.0000	265.89	4.42	2.55	112.00	1.418	29	23.16	9.49	0.5000
RFS APXVAARR24_43-U-NA20 Panel Antenna	240.0000	265.89	-4.42	2.55	112.00	1.418	29	23.16	9.49	0.5000
Ericsson 4449 B71 + B12 Radio Unit	0.0000	96.16	0.00	-5.11	112.00	1.418	29	2.12	1.51	0.5000
Ericsson 4449 B71 + B12	120.0000	96.16	3.77	2.18	112.00	1.418	29	2.12	1.51	0.5000

Description	Aiming Azimuth °	Weight lb	$Offset_x$ ft	$Offset_z$ ft	z ft	K_z	q_z psf	C_AA_C Front ft^2	C_AA_C Side ft^2	t_z in
Radio Unit Ericsson 4449 B71 + B12	240.0000	96.16	-3.77	2.18	112.00	1.418	29	2.12	1.51	0.5000
Radio Unit Ericsson Radio 4415 B25	0.0000	64.25	0.00	-4.36	112.00	1.418	29	2.36	1.11	0.5000
RRH Unit Ericsson Radio 4415 B25	120.0000	64.25	3.77	2.18	112.00	1.418	29	2.36	1.11	0.5000
RRH Unit Ericsson Radio 4415 B25	240.0000	64.25	-3.77	2.18	112.00	1.418	29	2.36	1.11	0.5000
RRH Unit Ericsson Radio 4415 B66A RRH	0.0000	89.60	0.00	-4.36	112.00	1.418	29	2.10	1.75	0.5000
Ericsson Radio 4415 B66A RRH	120.0000	89.60	3.77	2.18	112.00	1.418	29	2.10	1.75	0.5000
Ericsson Radio 4415 B66A RRH	240.0000	89.60	-3.77	2.18	112.00	1.418	29	2.10	1.75	0.5000
WPA-70063-2CF Panel Antenna	180.0000	48.64	0.00	4.80	137.00	1.502	31	2.42	1.74	0.5000
SE419-SWBP2LDF(D00) Panel	180.0000	80.36	0.00	4.80	140.00	1.511	31	5.14	10.66	0.5000
432E-83I-01T TTA Unit	180.0000	44.70	0.00	1.80	140.00	1.511	31	3.57	1.27	0.5000
6' Side-Arm (PSA6 - SitePro1)	0.0000	424.00	0.00	0.00	140.00	1.511	31	30.80	30.80	0.5000
SC479-HF1LDF (D00I-E6085)	60.0000	69.82	4.16	-2.40	134.00	1.492	31	6.54	6.54	0.5000
SC479-HF1LDF (D00I-E6085)	60.0000	69.82	7.19	-4.15	134.00	1.492	31	6.54	6.54	0.5000
6'x4.5" OD Pipe Mount	300.0000	93.13	-1.56	-0.90	134.00	1.492	31	3.01	3.01	0.5000
6'x4.5" OD Pipe Mount	300.0000	93.13	-1.56	-0.90	140.00	1.511	31	3.01	3.01	0.5000
6'x4.5" OD Pipe Mount	180.0000	93.13	0.00	1.80	140.00	1.511	31	3.01	3.01	0.5000
	Sum Weight:	8735.20								

Discrete Appurtenance Pressures - Service $G_H = 1.138$

Description	Aiming Azimuth °	Weight lb	$Offset_x$ ft	$Offset_z$ ft	z ft	K_z	q_z psf	C_AA_C Front ft^2	C_AA_C Side ft^2
DB438	0.0000	7.00	0.00	0.00	60.00	1.186	25	0.77	0.23
531-70 Dipole	120.0000	40.00	9.14	5.28	65.00	1.214	25	3.23	2.63
5' Side-Arm	0.0000	140.00	0.00	0.00	65.00	1.214	25	10.60	10.60
PR-950	240.0000	38.00	-4.52	2.61	80.00	1.288	27	6.35	6.35
2'6"x4" Pipe Mount	0.0000	27.00	0.00	0.00	80.00	1.288	27	0.75	0.75
DB222-A	120.0000	16.00	7.45	4.30	82.00	1.297	27	1.60	1.60
4' Side Mount Standoff	0.0000	50.00	0.00	0.00	81.00	1.292	27	2.72	2.72
DB438	120.0000	7.00	4.38	2.53	83.00	1.302	27	0.77	0.23
DB586-Y (inverted)	240.0000	8.25	-8.56	4.94	95.00	1.353	28	1.01	1.01
6' Side Mount Standoff	0.0000	70.00	0.00	0.00	102.00	1.380	29	4.97	4.97
432E-83I-01T TTA Unit	240.0000	25.00	-5.72	3.30	102.00	1.380	29	3.33	1.11
DB586-Y	240.0000	8.25	-8.32	4.80	108.00	1.403	29	1.01	1.01
DB224-A	0.0000	32.00	0.00	-4.11	106.00	1.396	29	3.15	3.15
DB222-A (inverted)	180.0000	16.00	0.00	8.42	97.00	1.361	28	1.60	1.60
8' Side Arm	165.0000	325.00	3.13	1.80	102.00	1.380	29	17.20	17.20
8' Side Arm	195.0000	325.00	-3.13	1.80	102.00	1.380	29	17.20	17.20
SC479-HF1LDF (inverted)	180.0000	30.00	0.00	8.32	107.00	1.399	29	5.06	5.06
8' Side Arm	165.0000	325.00	3.13	1.80	118.00	1.439	30	17.20	17.20
8' Side Arm	195.0000	325.00	-3.13	1.80	118.00	1.439	30	17.20	17.20
8' Side Arm	45.0000	325.00	0.00	-3.61	118.00	1.439	30	17.20	17.20

Description	Aiming Azimuth °	Weight lb	$Offset_x$ ft	$Offset_z$ ft	z ft	K_z	q_z psf	C_AA_C Front ft^2	C_AA_C Side ft^2
8' Side Arm	75.0000	325.00	3.13	1.80	118.00	1.439	30	17.20	17.20
6' Side-Arm	0.0000	140.00	0.00	0.00	125.00	1.463	30	10.60	10.60
2'6"x4" Pipe Mount	0.0000	27.00	0.00	-4.11	132.50	1.488	31	0.75	0.75
2'6"x4" Pipe Mount	240.0000	27.00	-3.56	2.05	134.50	1.494	31	0.75	0.75
Flash Beacon Lighting	0.0000	50.00	0.00	0.00	140.00	1.511	31	2.70	2.70
Lightning Rod 1"x10'	0.0000	40.00	0.00	0.00	156.00	1.559	32	1.00	1.00
L-810 Obstruction Lighting (1)	0.0000	6.65	0.00	-8.27	70.00	1.240	26	0.36	0.36
L-810 Obstruction Lighting (1)	240.0000	6.65	-7.17	4.14	70.00	1.240	26	0.36	0.36
WPA-70063-2CF Panel Antenna	300.0000	30.00	-4.16	-2.40	143.00	1.520	32	2.59	1.55
432E-83I-01T TTA Unit	300.0000	25.00	-4.16	-2.40	140.00	1.511	31	3.33	1.11
WPA-70063-2CF Panel Antenna	300.0000	30.00	-4.16	-2.40	137.00	1.502	31	2.59	1.55
6' Side-Arm	0.0000	140.00	0.00	0.00	140.00	1.511	31	10.60	10.60
Commscope SF-QV12-B Mount Frame	0.0000	415.00	0.00	-4.11	112.00	1.418	29	17.06	8.28
Commscope SF-QV12-B Mount Frame	120.0000	415.00	3.56	2.05	112.00	1.418	29	17.06	8.28
Commscope SF-QV12-B Mount Frame	240.0000	415.00	-3.56	2.05	112.00	1.418	29	17.06	8.28
RFS APXVAARR24_43-U-NA20 Panel Antenna	0.0000	153.30	0.00	-5.11	112.00	1.418	29	22.38	8.89
RFS APXVAARR24_43-U-NA20 Panel Antenna	120.0000	153.30	4.42	2.55	112.00	1.418	29	22.38	8.89
RFS APXVAARR24_43-U-NA20 Panel Antenna	240.0000	153.30	-4.42	2.55	112.00	1.418	29	22.38	8.89
Ericsson 4449 B71 + B12 Radio Unit	0.0000	80.00	0.00	-5.11	112.00	1.418	29	1.93	1.35
Ericsson 4449 B71 + B12 Radio Unit	120.0000	80.00	3.77	2.18	112.00	1.418	29	1.93	1.35
Ericsson 4449 B71 + B12 Radio Unit	240.0000	80.00	-3.77	2.18	112.00	1.418	29	1.93	1.35
Ericsson Radio 4415 B25 RRH Unit	0.0000	50.00	0.00	-4.36	112.00	1.418	29	2.17	0.96
Ericsson Radio 4415 B25 RRH Unit	120.0000	50.00	3.77	2.18	112.00	1.418	29	2.17	0.96
Ericsson Radio 4415 B25 RRH Unit	240.0000	50.00	-3.77	2.18	112.00	1.418	29	2.17	0.96
Ericsson Radio 4415 B66A RRH	0.0000	70.00	0.00	-4.36	112.00	1.418	29	1.91	1.58
Ericsson Radio 4415 B66A RRH	120.0000	70.00	3.77	2.18	112.00	1.418	29	1.91	1.58
Ericsson Radio 4415 B66A RRH	240.0000	70.00	-3.77	2.18	112.00	1.418	29	1.91	1.58
WPA-70063-2CF Panel Antenna	180.0000	30.00	0.00	4.80	137.00	1.502	31	2.22	1.45
SE419-SWBP2LDF(D00) Panel	180.0000	30.00	0.00	4.80	140.00	1.511	31	4.15	9.89
432E-83I-01T TTA Unit	180.0000	25.00	0.00	1.80	140.00	1.511	31	3.33	1.11
6' Side-Arm (PSA6 - SitePro1)	0.0000	280.00	0.00	0.00	140.00	1.511	31	21.20	21.20
SC479-HF1LDF (D00I-E6085)	60.0000	30.00	4.16	-2.40	134.00	1.492	31	5.06	5.06
SC479-HF1LDF (D00I-E6085)	60.0000	30.00	7.19	-4.15	134.00	1.492	31	5.06	5.06
6'x4.5" OD Pipe Mount	300.0000	70.00	-1.56	-0.90	134.00	1.492	31	1.50	1.50

Description	Aiming Azimuth °	Weight lb	$Offset_x$ ft	$Offset_z$ ft	z ft	K_z	q_z psf	C_AA_C Front ft^2	C_AA_C Side ft^2
6'x4.5" OD Pipe Mount	300.0000	70.00	-1.56	-0.90	140.00	1.511	31	1.50	1.50
6'x4.5" OD Pipe Mount	180.0000	70.00	0.00	1.80	140.00	1.511	31	1.50	1.50
	Sum Weight:	5926.70							

Dish Pressures - No Ice

Elevation ft	Dish Description	Aiming Azimuth °	Weight lb	$Offset_x$ ft	$Offset_z$ ft	K_z	A_A ft^2	q_z psf
132.50	6' Dish w/ Radome (PA6-65)	0.0000	240.00	0.00	-4.11	1.488	28.27	31
134.50	6' Dish w/ Radome (PA6-65)	240.0000	240.00	-3.56	2.05	1.494	28.27	31
134.50	Commscope PAR6-59W-PXA/A	300.0000	310.00	-2.00	-1.15	1.494	28.27	31
		Sum Weight:	790.00					

Dish Pressures - With Ice

Elevation ft	Dish Description	Aiming Azimuth °	Weight lb	$Offset_x$ ft	$Offset_z$ ft	K_z	A_A ft^2	q_z psf	t_z in
132.50	6' Dish w/ Radome (PA6-65)	0.0000	290.00	0.00	-4.11	1.488	29.07	31	0.5000
134.50	6' Dish w/ Radome (PA6-65)	240.0000	290.00	-3.56	2.05	1.494	29.07	31	0.5000
134.50	Commscope PAR6-59W-PXA/A	300.0000	460.00	-2.00	-1.15	1.494	29.07	31	0.5000
		Sum Weight:	1040.00						

Dish Pressures - Service

Elevation ft	Dish Description	Aiming Azimuth °	Weight lb	$Offset_x$ ft	$Offset_z$ ft	K_z	A_A ft^2	q_z psf
132.50	6' Dish w/ Radome (PA6-65)	0.0000	240.00	0.00	-4.11	1.488	28.27	31
134.50	6' Dish w/ Radome (PA6-65)	240.0000	240.00	-3.56	2.05	1.494	28.27	31
134.50	Commscope PAR6-59W-PXA/A	300.0000	310.00	-2.00	-1.15	1.494	28.27	31
		Sum Weight:	790.00					

Force Totals

Load Case	Vertical Forces lb	Sum of Forces X lb	Sum of Forces Z lb	Sum of Overturning Moments, M_x kip-ft	Sum of Overturning Moments, M_z kip-ft	Sum of Torques kip-ft
Leg Weight	17656.77					
Bracing Weight	7749.10					
Total Member Self-Weight	25405.88			-1.01	2.22	

Load Case	Vertical Forces lb	Sum of Forces X lb	Sum of Forces Z lb	Sum of Overturning Moments, M_x kip-ft	Sum of Overturning Moments, M_z kip-ft	Sum of Torques kip-ft
Total Weight	33902.69			-1.01	2.22	
Wind 0 deg - No Ice		-50.01	-40843.54	-3346.73	9.44	-21.69
Wind 30 deg - No Ice		19182.44	-33077.08	-2757.77	-1600.02	-22.14
Wind 45 deg - No Ice		26855.79	-26694.22	-2231.92	-2249.61	-20.66
Wind 60 deg - No Ice		32544.64	-18646.53	-1563.26	-2736.51	-17.80
Wind 90 deg - No Ice		38451.50	50.01	6.21	-3214.76	-9.91
Wind 120 deg - No Ice		35594.43	20465.08	1678.10	-2924.48	1.01
Wind 135 deg - No Ice		26926.52	26764.95	2240.11	-2259.81	6.98
Wind 150 deg - No Ice		19269.06	33127.10	2762.97	-1612.52	12.24
Wind 180 deg - No Ice		50.01	37379.69	3136.00	-5.00	19.25
Wind 210 deg - No Ice		-19182.44	33077.08	2755.75	1604.46	22.14
Wind 225 deg - No Ice		-26855.79	26694.22	2229.90	2254.04	20.66
Wind 240 deg - No Ice		-35544.42	20378.46	1665.60	2921.70	20.68
Wind 270 deg - No Ice		-38451.50	-50.01	-8.23	3219.19	9.91
Wind 300 deg - No Ice		-32594.65	-18733.16	-1575.76	2748.16	-1.45
Wind 315 deg - No Ice		-26926.52	-26764.95	-2242.13	2264.25	-6.98
Wind 330 deg - No Ice		-19269.06	-33127.10	-2764.99	1616.96	-12.24
Member Ice	5647.09					
Total Weight Ice	45874.66			-4.39	8.44	
Wind 0 deg - Ice		-45.88	-52695.21	-4339.60	15.20	-31.83
Wind 30 deg - Ice		25177.53	-43465.09	-3626.62	-2093.09	-33.03
Wind 45 deg - Ice		35337.94	-35183.17	-2942.39	-2949.54	-30.92
Wind 60 deg - Ice		42938.86	-24654.83	-2067.00	-3595.34	-26.72
Wind 90 deg - Ice		50434.53	45.88	2.37	-4206.33	-14.67
Wind 120 deg - Ice		45847.88	26387.34	2169.07	-3773.83	1.82
Wind 135 deg - Ice		35402.82	35248.05	2943.16	-2959.11	10.54
Wind 150 deg - Ice		25257.00	43510.97	3624.60	-2104.80	18.36
Wind 180 deg - Ice		45.88	49389.13	4132.53	1.68	28.96
Wind 210 deg - Ice		-25177.53	43465.09	3617.84	2109.96	33.03
Wind 225 deg - Ice		-35337.94	35183.17	2933.60	2966.42	30.92
Wind 240 deg - Ice		-45802.00	26307.87	2157.36	3783.94	30.01
Wind 270 deg - Ice		-50434.53	-45.88	-11.16	4223.20	14.67
Wind 300 deg - Ice		-42984.74	-24734.30	-2078.71	3618.98	-2.23
Wind 315 deg - Ice		-35402.82	-35248.05	-2951.95	2975.98	-10.54
Wind 330 deg - Ice		-25257.00	-43510.97	-3633.39	2121.68	-18.36
Total Weight	33902.69			-1.01	2.22	
Wind 0 deg - Service		-50.01	-40843.54	-3344.21	7.99	-21.69
Wind 30 deg - Service		19182.44	-33077.08	-2755.25	-1601.47	-22.14
Wind 45 deg - Service		26855.79	-26694.22	-2229.40	-2251.05	-20.66
Wind 60 deg - Service		32544.64	-18646.53	-1560.74	-2737.96	-17.80
Wind 90 deg - Service		38451.50	50.01	8.73	-3216.20	-9.91
Wind 120 deg - Service		35594.43	20465.08	1680.62	-2925.93	1.01
Wind 135 deg - Service		26926.52	26764.95	2242.63	-2261.26	6.98
Wind 150 deg - Service		19269.06	33127.10	2765.49	-1613.97	12.24
Wind 180 deg - Service		50.01	37379.69	3138.51	-6.45	19.25
Wind 210 deg - Service		-19182.44	33077.08	2758.27	1603.01	22.14
Wind 225 deg - Service		-26855.79	26694.22	2232.42	2252.60	20.66
Wind 240 deg - Service		-35544.42	20378.46	1668.12	2920.25	20.68
Wind 270 deg - Service		-38451.50	-50.01	-5.71	3217.75	9.91
Wind 300 deg - Service		-32594.65	-18733.16	-1573.24	2746.72	-1.45
Wind 315 deg - Service		-26926.52	-26764.95	-2239.61	2262.80	-6.98
Wind 330 deg - Service		-19269.06	-33127.10	-2762.47	1615.51	-12.24

Load Combinations

Comb. No.	Description
1	Dead Only
2	Dead+Wind 0 deg - No Ice
3	Dead+Wind 30 deg - No Ice
4	Dead+Wind 45 deg - No Ice
5	Dead+Wind 60 deg - No Ice
6	Dead+Wind 90 deg - No Ice
7	Dead+Wind 120 deg - No Ice
8	Dead+Wind 135 deg - No Ice
9	Dead+Wind 150 deg - No Ice
10	Dead+Wind 180 deg - No Ice
11	Dead+Wind 210 deg - No Ice
12	Dead+Wind 225 deg - No Ice
13	Dead+Wind 240 deg - No Ice
14	Dead+Wind 270 deg - No Ice
15	Dead+Wind 300 deg - No Ice
16	Dead+Wind 315 deg - No Ice
17	Dead+Wind 330 deg - No Ice
18	Dead+Ice
19	Dead+Wind 0 deg+Ice
20	Dead+Wind 30 deg+Ice
21	Dead+Wind 45 deg+Ice
22	Dead+Wind 60 deg+Ice
23	Dead+Wind 90 deg+Ice
24	Dead+Wind 120 deg+Ice
25	Dead+Wind 135 deg+Ice
26	Dead+Wind 150 deg+Ice
27	Dead+Wind 180 deg+Ice
28	Dead+Wind 210 deg+Ice
29	Dead+Wind 225 deg+Ice
30	Dead+Wind 240 deg+Ice
31	Dead+Wind 270 deg+Ice
32	Dead+Wind 300 deg+Ice
33	Dead+Wind 315 deg+Ice
34	Dead+Wind 330 deg+Ice
35	Dead+Wind 0 deg - Service
36	Dead+Wind 30 deg - Service
37	Dead+Wind 45 deg - Service
38	Dead+Wind 60 deg - Service
39	Dead+Wind 90 deg - Service
40	Dead+Wind 120 deg - Service
41	Dead+Wind 135 deg - Service
42	Dead+Wind 150 deg - Service
43	Dead+Wind 180 deg - Service
44	Dead+Wind 210 deg - Service
45	Dead+Wind 225 deg - Service
46	Dead+Wind 240 deg - Service
47	Dead+Wind 270 deg - Service
48	Dead+Wind 300 deg - Service
49	Dead+Wind 315 deg - Service
50	Dead+Wind 330 deg - Service

Maximum Member Forces

Section No.	Elevation ft	Component Type	Condition	Gov. Load Comb.	Force lb	Major Axis Moment kip-ft	Minor Axis Moment kip-ft
T1	140 - 120	Leg	Max Tension	32	20213.02	-0.65	-0.42
			Max. Compression	30	-22935.35	0.81	-0.56
			Max. Mx	24	-6424.63	-0.87	-0.62

Section No.	Elevation ft	Component Type	Condition	Gov. Load Comb.	Force lb	Major Axis Moment kip-ft	Minor Axis Moment kip-ft
			Max. My	19	-6961.98	-0.11	1.05
			Max. Vy	30	1065.73	0.35	0.07
			Max. Vx	19	1152.36	0.17	0.16
		Diagonal	Max Tension	28	4614.72	0.00	0.00
			Max. Compression	20	-4684.90	0.00	0.00
			Max. Mx	30	3891.94	0.02	-0.00
			Max. My	21	-3903.55	0.00	0.01
			Max. Vy	30	-12.82	0.02	-0.00
			Max. Vx	20	-1.75	0.00	0.01
		Top Girt	Max Tension	24	216.12	0.00	0.00
			Max. Compression	32	-274.04	0.00	0.00
			Max. Mx	18	-22.53	-0.03	0.00
			Max. My	28	-33.68	0.00	-0.00
			Max. Vy	18	16.03	0.00	0.00
			Max. Vx	28	0.00	0.00	0.00
T2	120 - 100	Leg	Max Tension	32	76071.91	-1.33	-0.84
			Max. Compression	24	-85871.30	-1.86	-0.84
			Max. Mx	24	-66325.99	-2.18	-1.16
			Max. My	19	-65780.78	-0.13	2.44
			Max. Vy	23	1385.79	-1.97	-0.72
			Max. Vx	19	-1540.57	-0.13	2.39
		Diagonal	Max Tension	20	9481.20	0.00	0.00
			Max. Compression	28	-9649.67	0.00	0.00
			Max. Mx	25	6064.34	0.04	0.00
			Max. My	28	-8610.80	-0.01	-0.02
			Max. Vy	25	-19.93	0.04	0.00
			Max. Vx	28	4.14	-0.01	-0.02
T3	100 - 80	Leg	Max Tension	32	129904.20	0.77	-0.05
			Max. Compression	24	-145162.33	2.08	-0.03
			Max. Mx	24	-103826.51	2.13	-0.04
			Max. My	34	-6424.70	-0.01	1.43
			Max. Vy	24	-1005.44	2.13	-0.04
			Max. Vx	34	-592.94	-0.01	1.43
		Diagonal	Max Tension	20	6991.50	0.00	0.00
			Max. Compression	20	-7012.18	0.00	0.00
			Max. Mx	30	4915.57	0.02	-0.00
			Max. My	19	-6611.02	0.00	0.01
			Max. Vy	32	14.34	0.02	0.00
			Max. Vx	27	2.80	0.00	0.00
		Top Girt	Max Tension	30	620.02	0.00	0.00
			Max. Compression	32	-813.82	0.00	0.00
			Max. Mx	22	-811.22	-0.03	0.00
			Max. My	19	-450.26	0.00	0.00
			Max. Vy	22	-16.02	0.00	0.00
			Max. Vx	19	-0.44	0.00	0.00
T4	80 - 60	Leg	Max Tension	32	173836.52	0.60	-0.04
			Max. Compression	24	-195025.48	1.89	-0.03
			Max. Mx	24	-170595.35	1.91	-0.04
			Max. My	34	-8287.78	0.01	1.11
			Max. Vy	24	-770.38	1.91	-0.04
			Max. Vx	26	446.69	0.01	-1.10
		Diagonal	Max Tension	20	7683.49	0.00	0.00
			Max. Compression	20	-7773.65	0.00	0.00
			Max. Mx	32	5580.23	0.03	0.00
			Max. My	19	-7202.63	0.01	0.01
			Max. Vy	32	19.33	0.03	0.00
			Max. Vx	27	1.81	0.00	0.00
T5	60 - 40	Leg	Max Tension	32	214244.00	0.54	-0.03
			Max. Compression	30	-242044.53	2.23	-0.28
			Max. Mx	24	-241956.86	2.24	-0.05
			Max. My	26	-9754.25	-0.01	-2.15

Section No.	Elevation ft	Component Type	Condition	Gov. Load Comb.	Force lb	Major Axis Moment kip-ft	Minor Axis Moment kip-ft
			Max. Vy	24	-817.66	2.24	-0.05
			Max. Vx	19	-694.54	-1.15	2.09
		Diagonal	Max Tension	20	8247.86	0.00	0.00
			Max. Compression	20	-8321.73	0.00	0.00
			Max. Mx	32	5762.20	0.04	0.00
			Max. My	20	-8110.08	0.02	0.01
			Max. Vy	32	25.16	0.04	0.00
			Max. Vx	20	-2.30	0.00	0.00
T6	40 - 20	Leg	Max Tension	32	246184.18	3.12	-0.03
			Max. Compression	30	-280039.18	1.44	-0.29
			Max. Mx	24	-279310.13	-3.86	0.03
			Max. My	34	-12849.36	-0.20	3.09
			Max. Vy	24	-1542.61	2.55	0.00
			Max. Vx	31	902.03	-0.20	-3.06
		Diagonal	Max Tension	20	10824.52	0.09	-0.00
			Max. Compression	20	-11215.02	0.00	0.00
			Max. Mx	30	8705.92	0.11	0.01
			Max. My	20	-10911.20	0.02	0.03
			Max. Vy	30	-41.89	0.11	0.01
			Max. Vx	20	4.68	0.00	0.00
		Secondary Horizontal	Max Tension	31	1103.06	0.04	-0.00
			Max. Compression	33	-1106.19	0.04	0.01
			Max. Mx	19	-226.74	0.05	0.01
			Max. My	27	-729.80	0.04	0.02
			Max. Vy	19	-28.69	0.05	0.01
			Max. Vx	27	2.97	0.00	0.00
T7	20 - 0	Leg	Max Tension	32	280638.61	3.08	-0.02
			Max. Compression	30	-322228.36	2.47	-0.18
			Max. Mx	24	-321412.06	-3.93	0.02
			Max. My	34	-15204.45	-0.20	3.44
			Max. Vy	24	-1502.12	2.35	0.00
			Max. Vx	31	989.09	-0.20	-3.43
		Diagonal	Max Tension	20	11103.86	0.16	-0.02
			Max. Compression	28	-11679.81	0.00	0.00
			Max. Mx	30	8905.77	0.20	0.02
			Max. My	20	-11285.66	0.02	0.05
			Max. Vy	30	-64.07	0.20	0.02
			Max. Vx	20	6.70	0.00	0.00
		Secondary Horizontal	Max Tension	31	1200.44	0.03	-0.00
			Max. Compression	31	-1214.76	0.05	0.01
			Max. Mx	34	142.63	0.06	0.00
			Max. My	27	-1107.42	0.05	0.01
			Max. Vy	34	-32.04	0.06	0.00
			Max. Vx	22	-2.36	0.00	0.00

Maximum Reactions

Location	Condition	Gov. Load Comb.	Vertical lb	Horizontal, X lb	Horizontal, Z lb
Leg C	Max. Vert	30	333198.35	27818.58	-17309.90
	Max. H_x	30	333198.35	27818.58	-17309.90
	Max. H_z	21	-278525.52	-23162.68	15651.31
	Min. Vert	22	-287402.23	-24348.45	15190.88
	Min. H_x	22	-287402.23	-24348.45	15190.88

Location	Condition	Gov. Load Comb.	Vertical lb	Horizontal, X lb	Horizontal, Z lb
	Min. H_z	30	333198.35	27818.58	-17309.90
Leg B	Max. Vert	24	332986.70	-28423.15	-16333.89
	Max. H_x	32	-289324.64	24942.51	14304.82
	Max. H_z	33	-280548.56	23987.17	14363.71
	Min. Vert	32	-289324.64	24942.51	14304.82
	Min. H_x	24	332986.70	-28423.15	-16333.89
	Min. H_z	24	332986.70	-28423.15	-16333.89
Leg A	Max. Vert	19	332025.05	-1147.63	32665.29
	Max. H_x	30	-142162.65	4149.27	-14735.41
	Max. H_z	19	332025.05	-1147.63	32665.29
	Min. Vert	27	-286335.31	1064.31	-28601.70
	Min. H_x	23	15119.03	-3861.96	1002.64
	Min. H_z	27	-286335.31	1064.31	-28601.70

Tower Mast Reaction Summary

Load Combination	Vertical lb	$Shear_x$ lb	$Shear_z$ lb	Overturning Moment, M_x kip-ft	Overturning Moment, M_z kip-ft	Torque kip-ft
Dead Only	33902.69	-0.00	-0.00	-1.01	2.22	0.00
Dead+Wind 0 deg - No Ice	33902.19	-49.93	-40843.14	-3353.22	9.50	-21.70
Dead+Wind 30 deg - No Ice	33902.71	19182.45	-33077.16	-2763.18	-1603.11	-22.16
Dead+Wind 45 deg - No Ice	33902.70	26855.82	-26694.28	-2236.31	-2253.98	-20.67
Dead+Wind 60 deg - No Ice	33902.70	32544.68	-18646.56	-1566.34	-2741.86	-17.81
Dead+Wind 90 deg - No Ice	33902.71	38451.57	50.04	6.22	-3221.05	-9.90
Dead+Wind 120 deg - No Ice	33902.71	35594.53	20465.14	1681.37	-2930.17	1.02
Dead+Wind 135 deg - No Ice	33902.71	26926.60	26765.00	2244.51	-2264.24	6.99
Dead+Wind 150 deg - No Ice	33902.71	19269.12	33127.15	2768.38	-1615.66	12.24
Dead+Wind 180 deg - No Ice	33902.70	50.01	37379.74	3142.14	-4.97	19.26
Dead+Wind 210 deg - No Ice	33902.71	-19182.50	33077.14	2761.12	1607.64	22.16
Dead+Wind 225 deg - No Ice	33902.71	-26855.87	26694.27	2234.24	2258.50	20.68
Dead+Wind 240 deg - No Ice	33902.19	-35544.03	20378.34	1668.80	2927.40	20.69
Dead+Wind 270 deg - No Ice	33902.71	-38451.57	-49.99	-8.25	3225.50	9.90
Dead+Wind 300 deg - No Ice	33902.70	-32594.69	-18733.18	-1578.84	2753.56	-1.46
Dead+Wind 315 deg - No Ice	33902.70	-26926.55	-26765.00	-2246.50	2268.70	-6.99
Dead+Wind 330 deg - No Ice	33902.71	-19269.08	-33127.18	-2770.38	1620.14	-12.24
Dead+Ice	45874.66	-0.00	-0.00	-4.39	8.44	-0.00
Dead+Wind 0 deg+Ice	45874.70	-45.88	-52695.39	-4351.48	15.33	-31.87
Dead+Wind 30 deg+Ice	45874.69	25177.54	-43465.22	-3636.66	-2098.77	-33.07
Dead+Wind 45 deg+Ice	45874.69	35337.96	-35183.25	-2950.55	-2957.62	-30.95
Dead+Wind 60 deg+Ice	45874.68	42938.91	-24654.86	-2072.74	-3605.23	-26.75
Dead+Wind 90 deg+Ice	45874.69	50434.64	45.93	2.37	-4217.92	-14.69
Dead+Wind 120 deg+Ice	45874.70	45848.04	26387.43	2175.03	-3784.16	1.83
Dead+Wind 135 deg+Ice	45874.70	35402.95	35248.13	2951.31	-2967.26	10.56
Dead+Wind 150 deg+Ice	45874.69	25257.10	43511.04	3634.61	-2110.57	18.39
Dead+Wind 180 deg+Ice	45874.68	45.88	49389.19	4143.94	1.75	28.99
Dead+Wind 210 deg+Ice	45874.69	-25177.64	43465.16	3627.76	2115.86	33.07
Dead+Wind 225 deg+Ice	45874.70	-35338.07	35183.24	2941.63	2974.66	30.95
Dead+Wind 240 deg+Ice	45874.70	-45802.16	26307.96	2163.20	3794.35	30.04
Dead+Wind 270 deg+Ice	45874.69	-50434.64	-45.83	-11.19	4234.84	14.69
Dead+Wind 300 deg+Ice	45874.68	-42984.79	-24734.33	-2084.43	3628.98	-2.24
Dead+Wind 315 deg+Ice	45874.69	-35402.85	-35248.13	-2960.07	2984.21	-10.57
Dead+Wind 330 deg+Ice	45874.69	-25257.01	-43511.09	-3643.37	2127.56	-18.39
Dead+Wind 0 deg - Service	33902.19	-49.93	-40843.14	-3353.22	9.50	-21.70
Dead+Wind 30 deg - Service	33902.71	19182.45	-33077.16	-2763.18	-1603.11	-22.16
Dead+Wind 45 deg - Service	33902.70	26855.82	-26694.28	-2236.31	-2253.98	-20.67
Dead+Wind 60 deg - Service	33902.70	32544.68	-18646.56	-1566.34	-2741.86	-17.81

Load Combination	Vertical lb	$Shear_x$ lb	$Shear_z$ lb	Overturning Moment, M_x kip-ft	Overturning Moment, M_z kip-ft	Torque kip-ft
Dead+Wind 90 deg - Service	33902.71	38451.57	50.04	6.22	-3221.05	-9.90
Dead+Wind 120 deg - Service	33902.71	35594.53	20465.14	1681.37	-2930.17	1.02
Dead+Wind 135 deg - Service	33902.71	26926.60	26765.00	2244.51	-2264.24	6.99
Dead+Wind 150 deg - Service	33902.71	19269.12	33127.15	2768.38	-1615.66	12.24
Dead+Wind 180 deg - Service	33902.70	50.01	37379.74	3142.14	-4.97	19.26
Dead+Wind 210 deg - Service	33902.71	-19182.50	33077.14	2761.12	1607.64	22.16
Dead+Wind 225 deg - Service	33902.71	-26855.87	26694.27	2234.24	2258.50	20.68
Dead+Wind 240 deg - Service	33902.19	-35544.03	20378.34	1668.80	2927.40	20.69
Dead+Wind 270 deg - Service	33902.71	-38451.57	-49.99	-8.25	3225.50	9.90
Dead+Wind 300 deg - Service	33902.70	-32594.69	-18733.18	-1578.84	2753.56	-1.46
Dead+Wind 315 deg - Service	33902.70	-26926.55	-26765.00	-2246.50	2268.70	-6.99
Dead+Wind 330 deg - Service	33902.71	-19269.08	-33127.18	-2770.38	1620.14	-12.24

Solution Summary

	Sum of Applied Forces			Sum of Reactions			
Load Comb.	PX lb	PY lb	PZ lb	PX lb	PY lb	PZ lb	% Error
1	-0.00	-33902.69	-0.00	0.00	33902.69	0.00	0.000%
2	-50.01	-33902.69	-40843.54	49.93	33902.19	40843.14	0.001%
3	19182.44	-33902.69	-33077.08	-19182.45	33902.71	33077.16	0.000%
4	26855.79	-33902.69	-26694.22	-26855.82	33902.70	26694.28	0.000%
5	32544.64	-33902.69	-18646.53	-32544.68	33902.70	18646.56	0.000%
6	38451.50	-33902.69	50.01	-38451.57	33902.71	-50.04	0.000%
7	35594.43	-33902.69	20465.08	-35594.53	33902.71	-20465.14	0.000%
8	26926.52	-33902.69	26764.95	-26926.60	33902.71	-26765.00	0.000%
9	19269.06	-33902.69	33127.10	-19269.12	33902.71	-33127.15	0.000%
10	50.01	-33902.69	37379.69	-50.01	33902.70	-37379.74	0.000%
11	-19182.44	-33902.69	33077.08	19182.50	33902.71	-33077.14	0.000%
12	-26855.79	-33902.69	26694.22	26855.87	33902.71	-26694.27	0.000%
13	-35544.42	-33902.69	20378.46	35544.03	33902.19	-20378.34	0.001%
14	-38451.50	-33902.69	-50.01	38451.57	33902.71	49.99	0.000%
15	-32594.65	-33902.69	-18733.16	32594.69	33902.70	18733.18	0.000%
16	-26926.52	-33902.69	-26764.95	26926.55	33902.70	26765.00	0.000%
17	-19269.06	-33902.69	-33127.10	19269.08	33902.71	33127.18	0.000%
18	-0.00	-45874.66	-0.00	0.00	45874.66	0.00	0.000%
19	-45.88	-45874.66	-52695.21	45.88	45874.70	52695.39	0.000%
20	25177.53	-45874.66	-43465.09	-25177.54	45874.69	43465.22	0.000%
21	35337.94	-45874.66	-35183.17	-35337.96	45874.69	35183.25	0.000%
22	42938.86	-45874.66	-24654.83	-42938.91	45874.68	24654.86	0.000%
23	50434.53	-45874.66	45.88	-50434.64	45874.69	-45.93	0.000%
24	45847.88	-45874.66	26387.34	-45848.04	45874.70	-26387.43	0.000%
25	35402.82	-45874.66	35248.05	-35402.95	45874.70	-35248.13	0.000%
26	25257.00	-45874.66	43510.97	-25257.10	45874.69	-43511.04	0.000%
27	45.88	-45874.66	49389.13	-45.88	45874.68	-49389.19	0.000%
28	-25177.53	-45874.66	43465.09	25177.64	45874.69	-43465.16	0.000%
29	-35337.94	-45874.66	35183.17	35338.07	45874.70	-35183.24	0.000%
30	-45802.00	-45874.66	26307.87	45802.16	45874.70	-26307.96	0.000%
31	-50434.53	-45874.66	-45.88	50434.64	45874.69	45.83	0.000%
32	-42984.74	-45874.66	-24734.30	42984.79	45874.68	24734.33	0.000%
33	-35402.82	-45874.66	-35248.05	35402.85	45874.69	35248.13	0.000%
34	-25257.00	-45874.66	-43510.97	25257.01	45874.69	43511.09	0.000%
35	-50.01	-33902.69	-40843.54	49.93	33902.19	40843.14	0.001%
36	19182.44	-33902.69	-33077.08	-19182.45	33902.71	33077.16	0.000%
37	26855.79	-33902.69	-26694.22	-26855.82	33902.70	26694.28	0.000%
38	32544.64	-33902.69	-18646.53	-32544.68	33902.70	18646.56	0.000%
39	38451.50	-33902.69	50.01	-38451.57	33902.71	-50.04	0.000%
40	35594.43	-33902.69	20465.08	-35594.53	33902.71	-20465.14	0.000%

	Sum of Applied Forces			Sum of Reactions			
Load Comb.	PX lb	PY lb	PZ lb	PX lb	PY lb	PZ lb	% Error
41	26926.52	-33902.69	26764.95	-26926.60	33902.71	-26765.00	0.000%
42	19269.06	-33902.69	33127.10	-19269.12	33902.71	-33127.15	0.000%
43	50.01	-33902.69	37379.69	-50.01	33902.70	-37379.74	0.000%
44	-19182.44	-33902.69	33077.08	19182.50	33902.71	-33077.14	0.000%
45	-26855.79	-33902.69	26694.22	26855.87	33902.71	-26694.27	0.000%
46	-35544.42	-33902.69	20378.46	35544.03	33902.19	-20378.34	0.001%
47	-38451.50	-33902.69	-50.01	38451.57	33902.71	49.99	0.000%
48	-32594.65	-33902.69	-18733.16	32594.69	33902.70	18733.18	0.000%
49	-26926.52	-33902.69	-26764.95	26926.55	33902.70	26765.00	0.000%
50	-19269.06	-33902.69	-33127.10	19269.08	33902.71	33127.18	0.000%

Non-Linear Convergence Results

Load Combination	Converged?	Number of Cycles	Displacement Tolerance	Force Tolerance
1	Yes	4	0.00000001	0.00021141
2	Yes	4	0.00000001	0.00013110
3	Yes	4	0.00000001	0.00013546
4	Yes	4	0.00000001	0.00013786
5	Yes	4	0.00000001	0.00013877
6	Yes	4	0.00000001	0.00013473
7	Yes	4	0.00000001	0.00013035
8	Yes	4	0.00000001	0.00013293
9	Yes	4	0.00000001	0.00013527
10	Yes	4	0.00000001	0.00013927
11	Yes	4	0.00000001	0.00013590
12	Yes	4	0.00000001	0.00013381
13	Yes	4	0.00000001	0.00013143
14	Yes	4	0.00000001	0.00013629
15	Yes	4	0.00000001	0.00014032
16	Yes	4	0.00000001	0.00013917
17	Yes	4	0.00000001	0.00013642
18	Yes	4	0.00000001	0.00021643
19	Yes	4	0.00000001	0.00013513
20	Yes	4	0.00000001	0.00014038
21	Yes	4	0.00000001	0.00014363
22	Yes	4	0.00000001	0.00014483
23	Yes	4	0.00000001	0.00013953
24	Yes	4	0.00000001	0.00013431
25	Yes	4	0.00000001	0.00013688
26	Yes	4	0.00000001	0.00014017
27	Yes	4	0.00000001	0.00014519
28	Yes	4	0.00000001	0.00014086
29	Yes	4	0.00000001	0.00013791
30	Yes	4	0.00000001	0.00013565
31	Yes	4	0.00000001	0.00014132
32	Yes	4	0.00000001	0.00014653
33	Yes	4	0.00000001	0.00014511
34	Yes	4	0.00000001	0.00014152
35	Yes	4	0.00000001	0.00013110
36	Yes	4	0.00000001	0.00013546
37	Yes	4	0.00000001	0.00013786
38	Yes	4	0.00000001	0.00013877
39	Yes	4	0.00000001	0.00013473
40	Yes	4	0.00000001	0.00013035
41	Yes	4	0.00000001	0.00013293

42	Yes	4	0.00000001	0.00013527
43	Yes	4	0.00000001	0.00013927
44	Yes	4	0.00000001	0.00013590
45	Yes	4	0.00000001	0.00013381
46	Yes	4	0.00000001	0.00013143
47	Yes	4	0.00000001	0.00013629
48	Yes	4	0.00000001	0.00014032
49	Yes	4	0.00000001	0.00013917
50	Yes	4	0.00000001	0.00013642

Maximum Tower Deflections - Service Wind

Section No.	Elevation ft	Horz. Deflection in	Gov. Load Comb.	Tilt °	Twist °
T1	140 - 120	7.227	40	0.4042	0.1278
T2	120 - 100	5.382	40	0.3768	0.1073
T3	100 - 80	3.731	40	0.2973	0.0859
T4	80 - 60	2.421	40	0.2412	0.0586
T5	60 - 40	1.400	40	0.1794	0.0376
T6	40 - 20	0.642	40	0.1188	0.0185
T7	20 - 0	0.182	40	0.0602	0.0074

Critical Deflections and Radius of Curvature - Service Wind

Elevation ft	Appurtenance	Gov. Load Comb.	Deflection in	Tilt °	Twist °	Radius of Curvature ft
156.00	Lightning Rod 1"x10'	40	7.227	0.4042	0.1278	94980
140.00	Flash Beacon Lighting	40	7.227	0.4042	0.1278	94980
134.50	6' Dish w/ Radome (PA6-65)	40	6.711	0.4007	0.1221	86346
134.00	SC479-HF1LDF (D00I-E6085)	40	6.665	0.4003	0.1216	79150
132.50	6' Dish w/ Radome (PA6-65)	40	6.525	0.3990	0.1200	63320
128.00	SC479-HF1LDF (D00I-E6085)	40	6.107	0.3938	0.1154	39575
125.00	6' Side-Arm	40	5.832	0.3888	0.1123	31660
118.00	8' Side Arm	40	5.205	0.3704	0.1053	21787
115.00	SC479-HF1LDF (inverted)	40	4.943	0.3595	0.1024	19348
113.00	DB586-Y	40	4.772	0.3515	0.1004	18011
112.00	Commscope SF-QV12-B Mount Frame	40	4.687	0.3474	0.0993	17410
111.00	DB224-A	40	4.603	0.3431	0.0983	16847
109.67	SC479-HF1LDF (inverted)	40	4.492	0.3374	0.0969	16144
108.00	DB586-Y	40	4.355	0.3302	0.0952	15292
106.00	DB224-A	40	4.194	0.3216	0.0930	14382
104.33	SC479-HF1LDF (inverted)	40	4.062	0.3145	0.0911	13703
103.00	DB586-Y	40	3.959	0.3090	0.0896	13234
102.00	6' Side Mount Standoff	40	3.882	0.3050	0.0884	12951
101.00	DB224-A	40	3.806	0.3011	0.0872	12745
100.00	DB586-Y (inverted)	40	3.731	0.2973	0.0859	12630
99.00	SC479-HF1LDF (inverted)	40	3.657	0.2938	0.0846	12615
97.00	DB222-A (inverted)	40	3.513	0.2870	0.0820	12822
95.00	DB586-Y (inverted)	40	3.372	0.2808	0.0793	13220
92.00	DB222-A (inverted)	40	3.167	0.2722	0.0750	13916
90.00	DB586-Y (inverted)	40	3.035	0.2669	0.0722	14422
83.00	DB438	40	2.597	0.2491	0.0625	16511
82.00	DB222-A	40	2.538	0.2465	0.0611	16825

Elevation ft	Appurtenance	Gov. Load Comb.	Deflection in	Tilt °	Twist °	Radius of Curvature ft
81.00	4' Side Mount Standoff	40	2.479	0.2439	0.0599	17114
80.00	PR-950	40	2.421	0.2412	0.0586	17362
70.00	L-810 Obstruction Lighting (1)	40	1.878	0.2114	0.0475	18322
69.00	531-70 Dipole	40	1.827	0.2083	0.0465	18394
65.00	531-70 Dipole	40	1.631	0.1954	0.0425	18689
61.00	531-70 Dipole	40	1.445	0.1826	0.0386	18885
60.00	DB438	40	1.400	0.1794	0.0376	18860

Maximum Tower Deflections - Design Wind

Section No.	Elevation ft	Horz. Deflection in	Gov. Load Comb.	Tilt °	Twist °
T1	140 - 120	9.313	30	0.5206	0.1570
T2	120 - 100	6.941	30	0.4839	0.1346
T3	100 - 80	4.820	30	0.3830	0.1117
T4	80 - 60	3.130	30	0.3112	0.0797
T5	60 - 40	1.811	24	0.2317	0.0525
T6	40 - 20	0.830	24	0.1536	0.0268
T7	20 - 0	0.235	24	0.0779	0.0109

Critical Deflections and Radius of Curvature - Design Wind

Elevation ft	Appurtenance	Gov. Load Comb.	Deflection in	Tilt °	Twist °	Radius of Curvature ft
156.00	Lightning Rod 1"x10'	30	9.313	0.5206	0.1570	75203
140.00	Flash Beacon Lighting	30	9.313	0.5206	0.1570	75203
134.50	6' Dish w/ Radome (PA6-65)	30	8.650	0.5155	0.1507	68367
134.00	SC479-HF1LDF (D00I-E6085)	30	8.590	0.5149	0.1501	62669
132.50	6' Dish w/ Radome (PA6-65)	30	8.410	0.5132	0.1484	50135
128.00	SC479-HF1LDF (D00I-E6085)	30	7.874	0.5061	0.1433	31335
125.00	6' Side-Arm	30	7.521	0.4995	0.1400	25068
118.00	8' Side Arm	30	6.714	0.4758	0.1325	17210
115.00	SC479-HF1LDF (inverted)	30	6.378	0.4619	0.1293	15251
113.00	DB586-Y	30	6.158	0.4518	0.1272	14170
112.00	Commscope SF-QV12-B Mount Frame	30	6.049	0.4465	0.1262	13686
111.00	DB224-A	30	5.941	0.4411	0.1251	13233
109.67	SC479-HF1LDF (inverted)	30	5.798	0.4339	0.1236	12674
108.00	DB586-Y	30	5.623	0.4247	0.1218	12039
106.00	DB224-A	30	5.415	0.4138	0.1194	11342
104.33	SC479-HF1LDF (inverted)	30	5.246	0.4048	0.1174	10799
103.00	DB586-Y	30	5.112	0.3978	0.1157	10421
102.00	6' Side Mount Standoff	30	5.014	0.3927	0.1144	10194
101.00	DB224-A	30	4.916	0.3878	0.1131	10027
100.00	DB586-Y (inverted)	30	4.820	0.3830	0.1117	9932
99.00	SC479-HF1LDF (inverted)	30	4.725	0.3785	0.1103	9917
97.00	DB222-A (inverted)	30	4.538	0.3699	0.1073	10072
95.00	DB586-Y (inverted)	30	4.357	0.3620	0.1042	10377
92.00	DB222-A (inverted)	30	4.093	0.3510	0.0993	10912
90.00	DB586-Y (inverted)	30	3.922	0.3442	0.0960	11300

Elevation ft	Appurtenance	Gov. Load Comb.	Deflection in	Tilt °	Twist °	Radius of Curvature ft
83.00	DB438	30	3.358	0.3214	0.0844	12881
82.00	DB222-A	30	3.281	0.3180	0.0828	13113
81.00	4' Side Mount Standoff	30	3.205	0.3147	0.0813	13327
80.00	PR-950	30	3.130	0.3112	0.0797	13511
70.00	L-810 Obstruction Lighting (1)	24	2.428	0.2730	0.0656	14246
69.00	531-70 Dipole	24	2.363	0.2689	0.0643	14303
65.00	531-70 Dipole	24	2.109	0.2524	0.0591	14533
61.00	531-70 Dipole	24	1.869	0.2358	0.0538	14684
60.00	DB438	24	1.811	0.2317	0.0525	14662

(REFERENCE) STRUCTURAL ANALYSIS REPORT – ANTENNA MOUNT ANALYSIS OF COMMSCOPE (SF-QV12-B) WITH PROPOSED RDFS

CENTEK engineering

Centered on Solutions℠

Structural Analysis Report

Antenna Mount Analysis

T-Mobile Site #: CT11330A

6 Stone Ranch Road
East Lyme, CT

Centek Project No. 19027.07

Date: May 06, 2019

Max Stress Ratio = 80.2%

Prepared for:

T-Mobile USA
35 Griffin Road
Bloomfield, CT 06002

STATE OF CONNECTICUT
TIMOTHY J. LYNN
No. 29336
LICENSED
PROFESSIONAL ENGINEER

63-2 North Branford Road, Branford, CT 06405 203.488.0580 Fax 203.488.8587 www.CentekEng.com

Table of Contents

SECTION 1 – REPORT

- ANTENNA AND APPURTENANCE SUMMARY
- STRUCTURE LOADING
- CONCLUSION

SECTION 2 – CALCULATIONS

- WIND LOAD ON APPURTENANCES
- RISA3D OUTPUT REPORT

SECTION 3 – REFERENCE MATERIALS (NOT INCLUDED WITHIN REPORT)

- RF DATA SHEET, DATED 04/17/2019

CENTEK engineering

Centered on Solutions℠

May 06, 2019

Mr. Dan Reid
Transcend Wireless
10 Industrial Ave
Mahwah, NJ 07430

Re: Structural Letter ~ Antenna Mount
T-Mobile – Site Ref: CT11330A
6 Stone Ranch Road
East Lyme, CT 06333

Centek Project No. 19027.07

Dear Mr. Reid,

Centek Engineering, Inc. has reviewed the T-Mobile antenna installation at the above referenced site. The purpose of the review is to determine the structural adequacy of the proposed mount, consisting of three (3) V- frame sector mounts (Commscope P/N: SF-QV12-B) with stiff arms to support the proposed/existing equipment configuration. The review considered the effects of wind load, dead load and ice load in accordance with the 2015 International Building Code as modified by the 2018 Connecticut State Building Code (CTBC) including ASCE 7-10 and ANSI/TIA-222-G *Structural Standards for Steel Antenna Towers and Supporting Structures*.

The loads considered in this analysis consist of the following:

- T-Mobile:
  V-Frames: Three (3) RFS APXVAARR24_43-U-NA20 panel antennas, three (3) Ericsson 4449 B71_B12 remote radio heads, three (3) Ericsson 4415 B25 remote radio heads and three (3) Ericsson 4415 B66A remote radio units mounted on three (3) V-Frames with a RAD center elevation of 112-ft +/- AGL.

The antenna mount was analyzed per the requirements of the 2015 International Building Code as modified by the 2018 Connecticut State Building Code considering a nominal design wind speed of 105 mph for East Lyme as required in Appendix N of the 2018 Connecticut State Building Code.

A structural analysis of tower and foundation needs to be completed prior to any work.

Based on our review of the installation, it is our opinion that the subject proposed replacement antenna mount has sufficient capacity to support the aforementioned antenna configuration. If there are any questions regarding this matter, please feel free to call.

Respectfully Submitted by:

Timothy J. Lynn, PE
Structural Engineer

STATE OF CONNECTICUT
TIMOTHY J. LYNN
No. 29336
LICENSED
PROFESSIONAL ENGINEER

Prepared by:

Fernando J. Palacios
Engineer

Section 2 - Calculations

CENTEK engineering
Centered on Solutions℠ www.centekeng.com
63-2 North Branford Road P: (203) 488-0580
Branford, CT 06405 F: (203) 488-8587

Development of Design Heights, Exposure Coefficients, and Velocity Pressures Per TIA-222-G

Wind Speeds

Basic Wind Speed	$V := 105$	mph	(User Input - 2018 CSBC Appendix N)
Basic Wind Speed with Ice	$V_i := 50$	mph	(User Input per Annex B of TIA-222-G)

Input

Structure Type =	$Structure_Type := Lattice$		(User Input)
Structure Category =	$SC := II$		(User Input)
Exposure Category =	$Exp := B$		(User Input)
Structure Height =	$h := 140$	ft	(User Input)
Height to Center of Antennas =	$z := 112$	ft	(User Input)
Radial Ice Thickness =	$t_i := 0.75$	in	(User Input per Annex B of TIA-222-G)
Radial Ice Density =	$Id := 56.00$	pcf	(User Input)
Topograpic Factor =	$K_{zt} := 1.0$		(User Input)
	$K_a := 1.0$		(User Input)
Gust Response Factor =	$G_H = 1.16$		(User Input)

Output

Wind Direction Probability Factor =

$$K_d := \begin{cases} 0.95 & \text{if } Structure_Type = Pole \\ 0.85 & \text{if } Structure_Type = Lattice \end{cases} = 0.85$$

(Per Table 2-2 of TIA-222-G)

(Per Table 2-3 of TIA-222-G)

Importance Factors =

$$I_{Wind} := \begin{cases} 0.87 & \text{if } SC = 1 \\ 1.00 & \text{if } SC = 2 \\ 1.15 & \text{if } SC = 3 \end{cases} = 1$$

$$I_{Wind_w_Ice} := \begin{cases} 0 & \text{if } SC = 1 \\ 1.00 & \text{if } SC = 2 \\ 1.00 & \text{if } SC = 3 \end{cases} = 1$$

$$I_{ice} := \begin{cases} 0 & \text{if } SC = 1 \\ 1.00 & \text{if } SC = 2 \\ 1.25 & \text{if } SC = 3 \end{cases} = 1$$

$$K_{iz} := \left(\frac{z}{33}\right)^{0.1} = 1.13$$

Velocity Pressure Coefficient Antennas =

$$t_{iz} := 2.0 \cdot t_i \cdot I_{ice} \cdot K_{iz} \cdot K_{zt}^{0.35} = 1.695$$

$$Kz := 2.01 \cdot \left(\left(\frac{z}{zg}\right)\right)^{\frac{2}{\alpha}} = 1.021$$

Velocity Pressure w/o Ice Antennas = $qz := 0.00256 \cdot K_d \cdot Kz \cdot V^2 \cdot I_{Wind} = 24.488$ psf

Velocity Pressure with Ice Antennas = $qz_{ice} := 0.00256 \cdot K_d \cdot Kz \cdot V_i^2 \cdot I_{Wind} = 5.553$ psf

Development of Wind & Ice Load on Antennas

Antenna Data:

Antenna Model =	RFS APXVAARR24_43-U-NA20		
Antenna Shape =	Flat		(User Input)
Antenna Height =	$L_{ant} := 95.9$	in	(User Input)
Antenna Width =	$W_{ant} := 19.7$	in	(User Input)
Antenna Thickness =	$T_{ant} := 8.7$	in	(User Input)
Antenna Weight =	$WT_{ant} := 133.4$	lbs	(User Input)
Number of Antennas =	$N_{ant} := 1$		(User Input)
Antenna Aspect Ratio =	$Ar_{ant} := \frac{L_{ant}}{W_{ant}} = 4.9$		
Antenna Force Coefficient =	$Ca_{ant} = 1.31$		

Wind Load (without ice)

Surface Area for One Antenna = $SA_{antF} := \frac{L_{ant} \cdot W_{ant}}{144} = 13.1$ sf

Total Antenna Wind Force Front = $F_{ant} := qz \cdot G_H \cdot Ca_{ant} \cdot K_a \cdot SA_{antF} = 486$ lbs

Surface Area for One Antenna = $SA_{antS} := \frac{L_{ant} \cdot T_{ant}}{144} = 5.8$ sf

Total Antenna Wind Force Side = $F_{ant} := qz \cdot G_H \cdot Ca_{ant} \cdot K_a \cdot SA_{antS} = 215$ lbs

Wind Load (with ice)

Surface Area for One Antenna w/ Ice = $SA_{ICEantF} := \frac{(L_{ant} + 2 \cdot t_{iz}) \cdot (W_{ant} + 2 \cdot t_{iz})}{144} = 15.9$ sf

Total Antenna Wind Force w/ Ice Front = $Fi_{ant} := qz_{ice} \cdot G_H \cdot Ca_{ant} \cdot K_a \cdot SA_{ICEantF} = 134$ lbs

Surface Area for One Antenna w/ Ice = $SA_{ICEantS} := \frac{(L_{ant} + 2 \cdot t_{iz}) \cdot (T_{ant} + 2 \cdot t_{iz})}{144} = 8.3$ sf

Total Antenna Wind Force w/ Ice Side = $Fi_{ant} := qz_{ice} \cdot G_H \cdot Ca_{ant} \cdot K_a \cdot SA_{ICEantS} = 70$ lbs

Gravity Load (without ice)

Weight of All Antennas = $WT_{ant} \cdot N_{ant} = 133$ lbs

Gravity Loads (ice only)

Volume of Each Antenna = $V_{ant} := L_{ant} \cdot W_{ant} \cdot T_{ant} = 2 \cdot 10^4$ cu in

Volume of Ice on Each Antenna = $V_{ice} := (L_{ant} + 2 \cdot t_{iz}) \cdot (W_{ant} + 2 \cdot t_{iz}) \cdot (T_{ant} + 2 \cdot t_{iz}) - V_{ant} = 1 \cdot 10^4$ cu in

Weight of Ice on Each Antenna = $W_{ICEant} := \frac{V_{ice}}{1728} \cdot Id = 366$ lbs

Weight of Ice on All Antennas = $W_{ICEant} \cdot N_{ant} = 366$ lbs

Development of Wind & Ice Load on RRUS's

RRUS Data:

RRUS Model =	Ericsson 4449 B71B12		
RRUS Shape =	Flat		(User Input)
RRUS Height =	$L_{RRUS} := 14.9$	in	(User Input)
RRUS Width =	$W_{RRUS} := 13.2$	in	(User Input)
RRUS Thickness =	$T_{RRUS} := 10.4$	in	(User Input)
RRUS Weight =	$WT_{RRUS} := 74$	lbs	(User Input)
Number of RRUS's =	$N_{RRUS} := 1$		
RRUS Aspect Ratio =	$Ar_{RRUS} := \frac{L_{RRUS}}{W_{RRUS}} = 1.1$		
RRUS Force Coefficient =	$Ca_{RRUS} = 1.2$		

Wind Load (without ice)

Surface Area for One RRUS = $SA_{RRUSF} := \frac{L_{RRUS} \cdot W_{RRUS}}{144} = 1.4$ sf

Total RRUS Wind Force = $F_{RRUS} := qz \cdot G_H \cdot Ca_{RRUS} \cdot K_a \cdot SA_{RRUSF} = 47$ lbs

Surface Area for One RRUS = $SA_{RRUSS} := \frac{L_{RRUS} \cdot T_{RRUS}}{144} = 1.1$ sf

Total RRUS Wind Force = $F_{RRUS} := qz \cdot G_H \cdot Ca_{RRUS} \cdot K_a \cdot SA_{RRUSS} = 37$ lbs

Wind Load (with ice)

Surface Area for One RRUS w/ Ice = $SA_{ICERRUSF} := \frac{(L_{RRUS} + 2 \cdot t_{iz}) \cdot (W_{RRUS} + 2 \cdot t_{iz})}{144} = 2.1$ sf

Total RRUS Wind Force w/ Ice = $Fi_{RRUS} := qz_{ice} \cdot G_H \cdot Ca_{RRUS} \cdot K_a \cdot SA_{ICERRUSF} = 16$ lbs

Surface Area for One RRUS w/ Ice = $SA_{ICERRUSS} := \frac{(L_{RRUS} + 2 \cdot t_{iz}) \cdot (T_{RRUS} + 2 \cdot t_{iz})}{144} = 1.8$ sf

Total RRUS Wind Force w/ Ice = $Fi_{RRUS} := qz_{ice} \cdot G_H \cdot Ca_{RRUS} \cdot K_a \cdot SA_{ICERRUSS} = 14$ lbs

Gravity Load (without ice)

Weight of All RRUSs = $WT_{RRUS} \cdot N_{RRUS} = 74$ lbs

Gravity Loads (ice only)

Volume of Each RRUS = $V_{RRUS} := L_{RRUS} \cdot W_{RRUS} \cdot T_{RRUS} = 2045$ cu in

Volume of Ice on Each RRUS = $V_{ice} := (L_{RRUS} + 2 \cdot t_{iz}) \cdot (W_{RRUS} + 2 \cdot t_{iz}) \cdot (T_{RRUS} + 2 \cdot t_{iz}) - V_{RRUS} = 2139$ cu in

Weight of Ice on Each RRUS = $W_{ICERRUS} := \frac{V_{ice}}{1728} \cdot Id = 69$ lbs

Weight of Ice on All RRUSs = $W_{ICERRUS} \cdot N_{RRUS} = 69$ lbs

Development of Wind & Ice Load on RRUS's

RRUS Data:

RRUS Model =	Ericsson 4415 B25		
RRUS Shape =	Flat		(User Input)
RRUS Height =	$L_{RRUS} := 16.5$	in	(User Input)
RRUS Width =	$W_{RRUS} := 13.4$	in	(User Input)
RRUS Thickness =	$T_{RRUS} := 5.9$	in	(User Input)
RRUS Weight =	$WT_{RRUS} := 46$	lbs	(User Input)
Number of RRUS's =	$N_{RRUS} := 1$		
RRUS Aspect Ratio =	$Ar_{RRUS} := \frac{L_{RRUS}}{W_{RRUS}} = 1.2$		
RRUS Force Coefficient =	$Ca_{RRUS} = 1.2$		

Wind Load (without ice)

Surface Area for One RRUS = $SA_{RRUSF} := \frac{L_{RRUS} \cdot W_{RRUS}}{144} = 1.5$ sf

Total RRUS Wind Force = $F_{RRUS} := qz \cdot G_H \cdot Ca_{RRUS} \cdot K_a \cdot SA_{RRUSF} = 52$ lbs

Surface Area for One RRUS = $SA_{RRUSS} := \frac{L_{RRUS} \cdot T_{RRUS}}{144} = 0.7$ sf

Total RRUS Wind Force = $F_{RRUS} := qz \cdot G_H \cdot Ca_{RRUS} \cdot K_a \cdot SA_{RRUSS} = 23$ lbs

Wind Load (with ice)

Surface Area for One RRUS w/ Ice = $SA_{ICERRUSF} := \frac{(L_{RRUS} + 2 \cdot t_{iz}) \cdot (W_{RRUS} + 2 \cdot t_{iz})}{144} = 2.3$ sf

Total RRUS Wind Force w/ Ice = $Fi_{RRUS} := qz_{ice} \cdot G_H \cdot Ca_{RRUS} \cdot K_a \cdot SA_{ICERRUSF} = 18$ lbs

Surface Area for One RRUS w/ Ice = $SA_{ICERRUSS} := \frac{(L_{RRUS} + 2 \cdot t_{iz}) \cdot (T_{RRUS} + 2 \cdot t_{iz})}{144} = 1.3$ sf

Total RRUS Wind Force w/ Ice = $Fi_{RRUS} := qz_{ice} \cdot G_H \cdot Ca_{RRUS} \cdot K_a \cdot SA_{ICERRUSS} = 10$ lbs

Gravity Load (without ice)

Weight of All RRUSs = $WT_{RRUS} \cdot N_{RRUS} = 46$ lbs

Gravity Loads (ice only)

Volume of Each RRUS = $V_{RRUS} := L_{RRUS} \cdot W_{RRUS} \cdot T_{RRUS} = 1304$ cu in

Volume of Ice on Each RRUS = $V_{ice} := (L_{RRUS} + 2 \cdot t_{iz}) \cdot (W_{RRUS} + 2 \cdot t_{iz}) \cdot (T_{RRUS} + 2 \cdot t_{iz}) - V_{RRUS} = 1798$ cu in

Weight of Ice on Each RRUS = $W_{ICERRUS} := \frac{V_{ice}}{1728} \cdot Id = 58$ lbs

Weight of Ice on All RRUSs = $W_{ICERRUS} \cdot N_{RRUS} = 58$ lbs

Development of Wind & Ice Load on RRUS's

RRUS Data:

RRUS Model =	Ericsson 4415 B66A		
RRUS Shape =	Flat		(User Input)
RRUS Height =	$L_{RRUS} := 16.5$	in	(User Input)
RRUS Width =	$W_{RRUS} := 13.4$	in	(User Input)
RRUS Thickness =	$T_{RRUS} := 5.9$	in	(User Input)
RRUS Weight =	$WT_{RRUS} := 47.40$	lbs	(User Input)
Number of RRUS's =	$N_{RRUS} := 1$		
RRUS Aspect Ratio =	$Ar_{RRUS} := \frac{L_{RRUS}}{W_{RRUS}} = 1.2$		
RRUS Force Coefficient =	$Ca_{RRUS} = 1.2$		

Wind Load (without ice)

Surface Area for One RRUS = $SA_{RRUSF} := \frac{L_{RRUS} \cdot W_{RRUS}}{144} = 1.5$ sf

Total RRUS Wind Force = $F_{RRUS} := qz \cdot G_H \cdot Ca_{RRUS} \cdot K_a \cdot SA_{RRUSF} = 52$ lbs

Surface Area for One RRUS = $SA_{RRUSS} := \frac{L_{RRUS} \cdot T_{RRUS}}{144} = 0.7$ sf

Total RRUS Wind Force = $F_{RRUS} := qz \cdot G_H \cdot Ca_{RRUS} \cdot K_a \cdot SA_{RRUSS} = 23$ lbs

Wind Load (with ice)

Surface Area for One RRUS w/ Ice = $SA_{ICERRUSF} := \frac{(L_{RRUS} + 2 \cdot t_{iz}) \cdot (W_{RRUS} + 2 \cdot t_{iz})}{144} = 2.3$ sf

Total RRUS Wind Force w/ Ice = $Fi_{RRUS} := qz_{ice} \cdot G_H \cdot Ca_{RRUS} \cdot K_a \cdot SA_{ICERRUSF} = 18$ lbs

Surface Area for One RRUS w/ Ice = $SA_{ICERRUSS} := \frac{(L_{RRUS} + 2 \cdot t_{iz}) \cdot (T_{RRUS} + 2 \cdot t_{iz})}{144} = 1.3$ sf

Total RRUS Wind Force w/ Ice = $Fi_{RRUS} := qz_{ice} \cdot G_H \cdot Ca_{RRUS} \cdot K_a \cdot SA_{ICERRUSS} = 10$ lbs

Gravity Load (without ice)

Weight of All RRUSs = $WT_{RRUS} \cdot N_{RRUS} = 47$ lbs

Gravity Loads (ice only)

Volume of Each RRUS = $V_{RRUS} := L_{RRUS} \cdot W_{RRUS} \cdot T_{RRUS} = 1304$ cu in

Volume of Ice on Each RRUS = $V_{ice} := (L_{RRUS} + 2 \cdot t_{iz}) \cdot (W_{RRUS} + 2 \cdot t_{iz}) \cdot (T_{RRUS} + 2 \cdot t_{iz}) - V_{RRUS} = 1798$ cu in

Weight of Ice on Each RRUS = $W_{ICERRUS} := \frac{V_{ice}}{1728} \cdot Id = 58$ lbs

Weight of Ice on All RRUSs = $W_{ICERRUS} \cdot N_{RRUS} = 58$ lbs

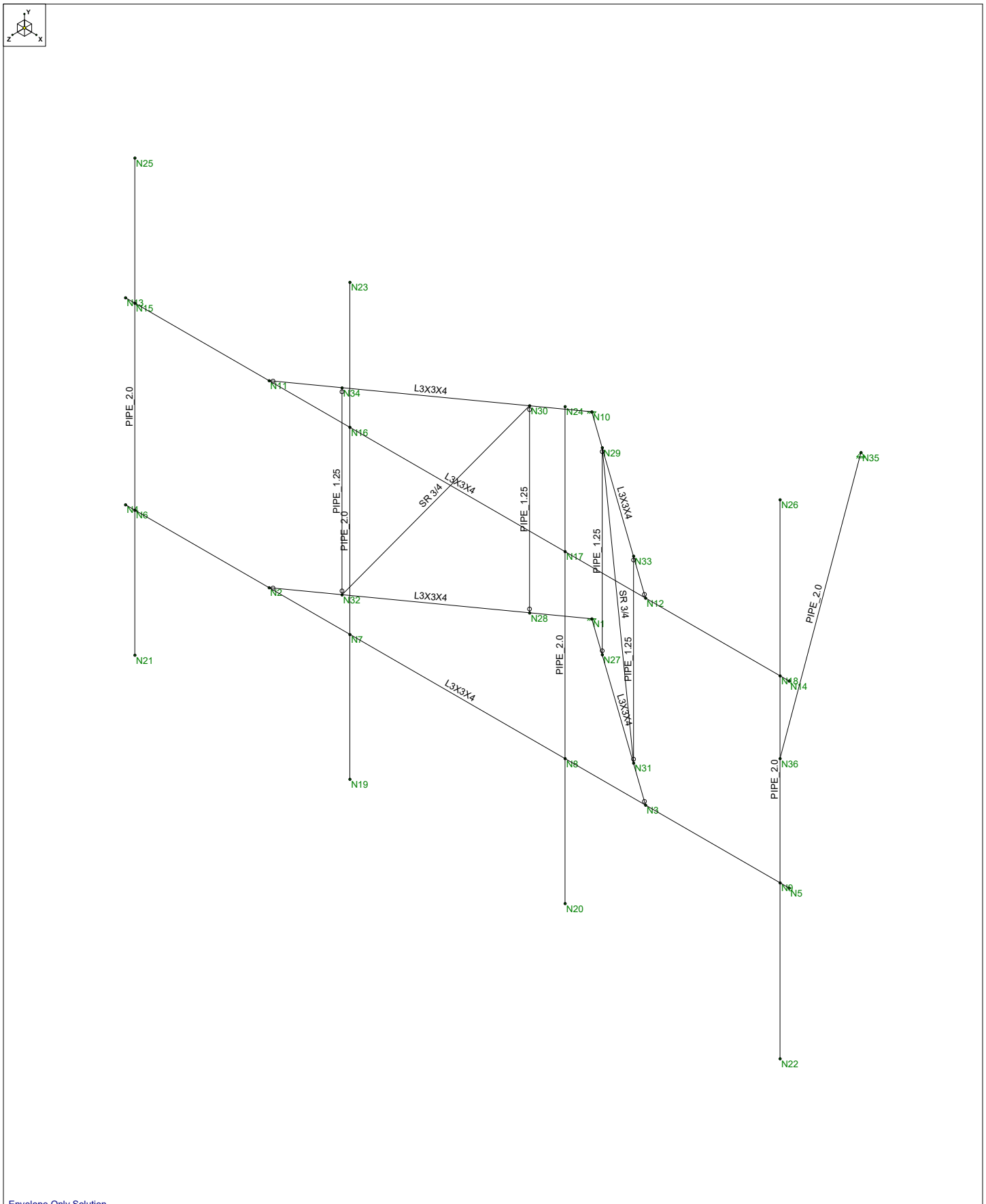

Envelope Only Solution

Centek		SK - 1
THC	CT11330A_AMA	May 6, 2019 at 10:29 AM
19027.07	Member Framing	CT11330A_AMA.r3d

(Global) Model Settings

Display Sections for Member Calcs	5
Max Internal Sections for Member Calcs	97
Include Shear Deformation?	Yes
Increase Nailing Capacity for Wind?	Yes
Include Warping?	Yes
Trans Load Btwn Intersecting Wood Wall?	Yes
Area Load Mesh (in^2)	144
Merge Tolerance (in)	.12
P-Delta Analysis Tolerance	0.50%
Include P-Delta for Walls?	Yes
Automatically Iterate Stiffness for Walls?	Yes
Max Iterations for Wall Stiffness	3
Gravity Acceleration (ft/sec^2)	32.2
Wall Mesh Size (in)	12
Eigensolution Convergence Tol. (1.E-)	4
Vertical Axis	Y
Global Member Orientation Plane	XZ
Static Solver	Sparse Accelerated
Dynamic Solver	Accelerated Solver

Hot Rolled Steel Code	AISC 14th(360-10): LRFD
Adjust Stiffness?	Yes(Iterative)
RISAConnection Code	AISC 14th(360-10): ASD
Cold Formed Steel Code	AISI S100-10: ASD
Wood Code	AWC NDS-12: ASD
Wood Temperature	< 100F
Concrete Code	ACI 318-11
Masonry Code	ACI 530-11: ASD
Aluminum Code	AA ADM1-10: ASD - Building
Stainless Steel Code	AISC 14th(360-10): ASD
Adjust Stiffness?	Yes(Iterative)

Number of Shear Regions	4
Region Spacing Increment (in)	4
Biaxial Column Method	Exact Integration
Parme Beta Factor (PCA)	.65
Concrete Stress Block	Rectangular
Use Cracked Sections?	Yes
Use Cracked Sections Slab?	No
Bad Framing Warnings?	No
Unused Force Warnings?	Yes
Min 1 Bar Diam. Spacing?	No
Concrete Rebar Set	REBAR_SET_ASTMA615
Min % Steel for Column	1
Max % Steel for Column	8

(Global) Model Settings, Continued

Seismic Code	ASCE 7-10
Seismic Base Elevation (ft)	Not Entered
Add Base Weight?	Yes
Ct X	.02
Ct Z	.02
T X (sec)	Not Entered
T Z (sec)	Not Entered
R X	3
R Z	3
Ct Exp. X	.75
Ct Exp. Z	.75
SD1	1
SDS	1
S1	1
TL (sec)	5
Risk Cat	I or II
Drift Cat	Other
Om Z	1
Om X	1
Cd Z	4
Cd X	4
Rho Z	1
Rho X	1

Hot Rolled Steel Properties

	Label	E [ksi]	G [ksi]	Nu	Therm (\1E5 F)	Density[k/ft^3]	Yield[ksi]	Ry	Fu[ksi]	Rt
1	A36 Gr.36	29000	11154	.3	.65	.49	36	1.5	58	1.2
2	A572 Gr.50	29000	11154	.3	.65	.49	50	1.1	58	1.2
3	A992	29000	11154	.3	.65	.49	50	1.1	58	1.2
4	A500 Gr.42	29000	11154	.3	.65	.49	42	1.3	58	1.1
5	A500 Gr.46	29000	11154	.3	.65	.49	46	1.2	58	1.1
6	A53 Grade B	29000	11154	.3	.65	.49	35	1.5	58	1.2

Hot Rolled Steel Section Sets

	Label	Shape	Type	Design List	Material	Desig...	A [in2]	Iyy [i...	Izz [i...	J [in4]
1	L3x3x1/4	L3X3X4	Beam	Pipe	A36 Gr.36	Typical	1.44	1.23	1.23	.031
2	Pipe 1.25	PIPE_1.25	Colu...	Wide Fla...	A53 Grade B	Typical	.625	.184	.184	.368
3	Pipe 2.0	PIPE_2.0	Beam	Pipe	A53 Grade B	Typical	1.02	.627	.627	1.25
4	Antenna Mast Pipe 2.0	PIPE_2.0	Colu...	Wide Fla...	A53 Grade B	Typical	1.02	.627	.627	1.25
5	SR3/4	SR 3/4	Beam	Pipe	A36 Gr.36	Typical	.442	.016	.016	.031

Hot Rolled Steel Design Parameters

	Label	Shape	Length[ft]	Lbyy[ft]	Lbzz[ft]	Lcomp top[...	Lcomp bot[...	L-torq...	Kyy	Kzz	Cb	Functi...
1	M1	L3x3x1/4	4.301	Segment	Segment	Segment	Segment	Segm...				Lateral
2	M2	L3x3x1/4	4.301	Segment	Segment	Segment	Segment	Segm...				Lateral
3	M3	L3x3x1/4	12.34	Segment	Segment	Segment	Segment	Segm...				Lateral
4	M4	L3x3x1/4	4.301	Segment	Segment	Segment	Segment	Segm...				Lateral
5	M5	L3x3x1/4	4.301	Segment	Segment	Segment	Segment	Segm...				Lateral

Hot Rolled Steel Design Parameters (Continued)

	Label	Shape	Length[ft]	Lbyy[ft]	Lbzz[ft]	Lcomp top[...	Lcomp bot[...	L-torq...	Kyy	Kzz	Cb	Functi...
6	M6	L3x3x1/4	12.34	Segment	Segment	Segment	Segment	Segm...				Lateral
7	M7	Antenna M...	8	Segment	Segment	Segment	Segment	Segm...				Lateral
8	M8	Antenna M...	8	Segment	Segment	Segment	Segment	Segm...				Lateral
9	M9	Antenna M...	8	Segment	Segment	Segment	Segment	Segm...				Lateral
10	M10	Antenna M...	9	Segment	Segment	Segment	Segment	Segm...				Lateral
11	M11	Pipe 1.25	3.333			Lbyy						Lateral
12	M12	Pipe 1.25	3.333			Lbyy						Lateral
13	M13	Pipe 1.25	3.333			Lbyy						Lateral
14	M14	Pipe 1.25	3.333			Lbyy						Lateral
15	M15	SR3/4	4.166	Segment	Segment	Segment	Segment	Segm...				Lateral
16	M16	SR3/4	4.166			Lbyy						Lateral
17	M17	Pipe 2.0	7.049			Lbyy						Lateral

Member Primary Data

	Label	I Joint	J Joint	K Joint	Rotate(deg)	Section/Shape	Type	Design List	Material	Design Rules
1	M1	N1	N3		270	L3x3x1/4	Beam	Pipe	A36 Gr.36	Typical
2	M2	N1	N2			L3x3x1/4	Beam	Pipe	A36 Gr.36	Typical
3	M3	N4	N5		180	L3x3x1/4	Beam	Pipe	A36 Gr.36	Typical
4	M4	N10	N12		180	L3x3x1/4	Beam	Pipe	A36 Gr.36	Typical
5	M5	N10	N11		90	L3x3x1/4	Beam	Pipe	A36 Gr.36	Typical
6	M6	N13	N14		270	L3x3x1/4	Beam	Pipe	A36 Gr.36	Typical
7	M7	N25	N21			Antenna Mast Pipe...	Column	Wide Flange	A53 Grad...	Typical
8	M8	N19	N23			Antenna Mast Pipe...	Column	Wide Flange	A53 Grad...	Typical
9	M9	N20	N24			Antenna Mast Pipe...	Column	Wide Flange	A53 Grad...	Typical
10	M10	N26	N22			Antenna Mast Pipe...	Column	Wide Flange	A53 Grad...	Typical
11	M11	N29	N27			Pipe 1.25	Column	Wide Flange	A53 Grad...	Typical
12	M12	N33	N31			Pipe 1.25	Column	Wide Flange	A53 Grad...	Typical
13	M13	N30	N28			Pipe 1.25	Column	Wide Flange	A53 Grad...	Typical
14	M14	N34	N32			Pipe 1.25	Column	Wide Flange	A53 Grad...	Typical
15	M15	N30	N32			SR3/4	Beam	Pipe	A36 Gr.36	Typical
16	M16	N29	N31			SR3/4	Beam	Pipe	A36 Gr.36	Typical
17	M17	N36	N35			Pipe 2.0	Beam	Pipe	A53 Grad...	Typical

Joint Coordinates and Temperatures

	Label	X [ft]	Y [ft]	Z [ft]	Temp [F]	Detach From Diaphragm
1	N1	0	0	0	0	
2	N2	-3.5	0	2.5	0	
3	N3	3.5	0	2.5	0	
4	N4	-6.17	0	2.5	0	
5	N5	6.17	0	2.5	0	
6	N6	-6	0	2.5	0	
7	N7	-2	0	2.5	0	
8	N8	2	0	2.5	0	
9	N9	6	0	2.5	0	
10	N10	0	3.333	0	0	
11	N11	-3.5	3.333	2.5	0	
12	N12	3.5	3.333	2.5	0	
13	N13	-6.17	3.333	2.5	0	
14	N14	6.17	3.333	2.5	0	

Joint Coordinates and Temperatures (Continued)

	Label	X [ft]	Y [ft]	Z [ft]	Temp [F]	Detach From Diaphragm
15	N15	-6	3.333	2.5	0	
16	N16	-2	3.333	2.5	0	
17	N17	2	3.333	2.5	0	
18	N18	6	3.333	2.5	0	
19	N19	-2	-2.333	2.5	0	
20	N20	2	-2.333	2.5	0	
21	N21	-6	-2.333	2.5	0	
22	N22	6	-2.833	2.5	0	
23	N23	-2	5.667	2.5	0	
24	N24	2	5.667	2.5	0	
25	N25	-6	5.667	2.5	0	
26	N26	6	6.167	2.5	0	
27	N27	0.675399	0	0.482428	0	
28	N28	-0.675399	0	0.482428	0	
29	N29	0.675399	3.333	0.482428	0	
30	N30	-0.675399	3.333	0.482428	0	
31	N31	2.709732	0	1.935523	0	
32	N32	-2.709732	0	1.935523	0	
33	N33	2.709732	3.333	1.935523	0	
34	N34	-2.709732	3.333	1.935523	0	
35	N35	1.825	2	-3.18	0	
36	N36	6	2	2.5	0	

Joint Boundary Conditions

	Joint Label	X [k/in]	Y [k/in]	Z [k/in]	X Rot.[k-ft/rad]	Y Rot.[k-ft/rad]	Z Rot.[k-ft/rad]
1	N1	Reaction	Reaction	Reaction	Reaction	Reaction	Reaction
2	N10	Reaction	Reaction	Reaction	Reaction	Reaction	Reaction
3	N35	Reaction	Reaction	Reaction			

Member Point Loads (BLC 2 : Dead Load)

	Member Label	Direction	Magnitude[lb,k-ft]	Location[ft,%]
1	M10	Y	-66.5	1
2	M10	Y	-66.5	8
3	M10	Y	-74	2.75
4	M10	Y	-46	4.5
5	M10	Y	-47	6.25

Member Point Loads (BLC 3 : Ice Load)

	Member Label	Direction	Magnitude[lb,k-ft]	Location[ft,%]
1	M10	Y	-183	8
2	M10	Y	-183	1
3	M10	Y	-69	2.75
4	M10	Y	-58	4.5
5	M10	Y	-58	6.25

Member Point Loads (BLC 4 : Wind with Ice X)

	Member Label	Direction	Magnitude[lb,k-ft]	Location[ft,%]
1	M10	X	35	8

Member Point Loads (BLC 4 : Wind with Ice X) (Continued)

	Member Label	Direction	Magnitude[lb,k-ft]	Location[ft,%]
2	M10	X	35	1
3	M10	X	14	2.75
4	M10	X	10	4.5
5	M10	X	10	6.25

Member Point Loads (BLC 5 : Wind X)

	Member Label	Direction	Magnitude[lb,k-ft]	Location[ft,%]
1	M10	X	107.5	8
2	M10	X	107.5	1
3	M10	X	37	2.75
4	M10	X	23	4.5
5	M10	X	23	6.25

Member Point Loads (BLC 6 : Wind with Ice Z)

	Member Label	Direction	Magnitude[lb,k-ft]	Location[ft,%]
1	M10	Z	67	1
2	M10	Z	67	8
3	M10	Z	16	2.75
4	M10	Z	18	4.5
5	M10	Z	18	6.25

Member Point Loads (BLC 7 : Wind Z)

	Member Label	Direction	Magnitude[lb,k-ft]	Location[ft,%]
1	M10	Z	243	1
2	M10	Z	243	8
3	M10	Z	47	2.75
4	M10	Z	52	4.5
5	M10	Z	52	6.25

Member Distributed Loads (BLC 4 : Wind with Ice X)

	Member Label	Direction	Start Magnitude[lb/ft,F,ksf]	End Magnitude[lb/ft,F,ksf]	Start Location[ft,%]	End Location[ft,%]
1	M7	X	1.16	1.16	0	0
2	M8	X	1.16	1.16	0	0
3	M9	X	1.16	1.16	0	0
4	M10	X	1.16	1.16	0	0
5	M17	X	1.16	1.16	0	0
6	M5	X	1.16	1.16	0	0
7	M2	X	1.16	1.16	0	0
8	M4	X	1.16	1.16	0	0
9	M1	X	1.16	1.16	0	0
10	M16	X	1.16	1.16	0	0
11	M12	X	1.16	1.16	0	0
12	M11	X	1.16	1.16	0	0
13	M13	X	1.16	1.16	0	0
14	M15	X	1.16	1.16	0	0

Member Distributed Loads (BLC 5 : Wind X)

	Member Label	Direction	Start Magnitude[lb/ft,F,ksf]	End Magnitude[lb/ft,F,ksf]	Start Location[ft,%]	End Location[ft,%]

Member Distributed Loads (BLC 5 : Wind X) (Continued)

	Member Label	Direction	Start Magnitude[lb/ft,F,ksf]	End Magnitude[lb/ft,F,ksf]	Start Location[ft,%]	End Location[ft,%]
1	M7	X	5.2	5.2	0	0
2	M8	X	5.2	5.2	0	0
3	M9	X	5.2	5.2	0	0
4	M10	X	5.2	5.2	0	0
5	M5	X	5.2	5.2	0	0
6	M15	X	5.2	5.2	0	0
7	M2	X	5.2	5.2	0	0
8	M13	X	5.2	5.2	0	0
9	M4	X	5.2	5.2	0	0
10	M11	X	5.2	5.2	0	0
11	M16	X	5.2	5.2	0	0
12	M12	X	5.2	5.2	0	0
13	M1	X	5.2	5.2	0	0
14	M17	X	5.2	5.2	0	0

Member Distributed Loads (BLC 6 : Wind with Ice Z)

	Member Label	Direction	Start Magnitude[lb/ft,F,ksf]	End Magnitude[lb/ft,F,ksf]	Start Location[ft,%]	End Location[ft,%]
1	M7	Z	1.16	1.16	0	0
2	M8	Z	1.16	1.16	0	0
3	M6	Z	1.16	1.16	0	0
4	M3	Z	1.16	1.16	0	0
5	M5	Z	1.16	1.16	0	0
6	M14	Z	1.16	1.16	0	0
7	M15	Z	1.16	1.16	0	0
8	M2	Z	1.16	1.16	0	0
9	M13	Z	1.16	1.16	0	0
10	M9	Z	1.16	1.16	0	0
11	M16	Z	1.16	1.16	0	0
12	M11	Z	1.16	1.16	0	0
13	M4	Z	1.16	1.16	0	0
14	M1	Z	1.16	1.16	0	0
15	M10	Z	1.16	1.16	0	0
16	M17	Z	1.16	1.16	0	0
17	M12	Z	1.16	1.16	0	0

Member Distributed Loads (BLC 7 : Wind Z)

	Member Label	Direction	Start Magnitude[lb/ft,F,ksf]	End Magnitude[lb/ft,F,ksf]	Start Location[ft,%]	End Location[ft,%]
1	M6	Z	5.2	5.2	0	0
2	M5	Z	5.2	5.2	0	0
3	M7	Z	5.2	5.2	0	0
4	M8	Z	5.2	5.2	0	0
5	M9	Z	5.2	5.2	0	0
6	M10	Z	5.2	5.2	0	0
7	M15	Z	5.2	5.2	0	0
8	M14	Z	5.2	5.2	0	0
9	M13	Z	5.2	5.2	0	0
10	M2	Z	5.2	5.2	0	0
11	M3	Z	5.2	5.2	0	0
12	M1	Z	5.2	5.2	0	0
13	M11	Z	5.2	5.2	0	0
14	M4	Z	5.2	5.2	0	0

Member Distributed Loads (BLC 7 : Wind Z) (Continued)

	Member Label	Direction	Start Magnitude[lb/ft,F,ksf]	End Magnitude[lb/ft,F,ksf]	Start Location[ft,%]	End Location[ft,%]
15	M16	Z	5.2	5.2	0	0
16	M12	Z	5.2	5.2	0	0
17	M17	Z	5.2	5.2	0	0

Basic Load Cases

	BLC Description	Category	X Gr...	Y Gr...	Z Gr...	Joint	Point	Distri...	Area(...	Surface(Plate/Wall)
1	Self Weight	DL		-1						
2	Dead Load	None					5			
3	Ice Load	None					5			
4	Wind with Ice X	None					5	14		
5	Wind X	None					5	14		
6	Wind with Ice Z	None					5	17		
7	Wind Z	None					5	17		

Load Combinations

	Description	Solve	P...	SR...	BLC	F...	BLC	Fa...	B...	Fa...	B...	Fa...	B...	Fa...	B...	Fa...	B...	Fa...	B...	Fa...	B...	Fa...	B...	Fa...
1	1.2D + 1.6W (X-direction)	Yes	Y		1	1...	2	1.2	5	1.6														
2	0.9D + 1.6W (X-direction)	Yes	Y		1	.9	2	.9	5	1.6														
3	1.2D + 1.0Di + 1.0Wi (X...	Yes	Y		1	1...	2	1.2	3	1	4	1												
4	1.2D + 1.6W (Z-direction)	Yes	Y		1	1...	2	1.2	7	1.6														
5	0.9D + 1.6W (Z-direction)	Yes	Y		1	.9	2	.9	7	1.6														
6	1.2D + 1.0Di + 1.0Wi (Z...	Yes	Y		1	1...	2	1.2	3	1	6	1												

Envelope Joint Reactions

	Joint		X [lb]	LC	Y [lb]	LC	Z [lb]	LC	MX [k-ft]	LC	MY [k-ft]	LC	MZ [k-ft]	LC
1	N1	max	1628.352	6	590.024	3	819.576	3	-.069	5	1.222	4	.398	1
2		min	-93.613	2	257.94	5	-169.596	5	-.199	3	-.668	2	-.482	5
3	N10	max	-33.429	5	763.053	6	-470.751	2	-.11	2	.9	5	.575	4
4		min	-1684.094	3	302.005	2	-878.922	6	-.263	6	-.845	1	-.301	2
5	N35	max	107.684	2	27.398	6	202.59	1	0	6	0	6	0	6
6		min	-757.48	4	12.368	2	-1033.1...	4	0	1	0	1	0	1
7	Totals:	max	0	6	1373.144	6	0	3						
8		min	-1105.674	1	616.608	2	-1881.1...	4						

Envelope Joint Displacements

	Joint		X [in]	LC	Y [in]	LC	Z [in]	LC	X Rotation [...	LC	Y Rotation [...	LC	Z Rotation [...	LC
1	N1	max	0	6	0	6	0	6	0	6	0	6	0	6
2		min	0	1	0	1	0	1	0	1	0	1	0	1
3	N2	max	.063	2	.009	6	.087	2	2.322e-03	6	3.217e-03	2	-6.583e-05	2
4		min	-.141	4	-.004	1	-.196	4	1.365e-03	2	-3.483e-03	4	-3.676e-04	6
5	N3	max	.063	2	-.038	2	.199	4	6.549e-05	3	2.132e-03	3	-2.415e-03	5
6		min	-.143	4	-.093	6	-.088	2	-5.06e-03	5	-5.865e-03	5	-7.397e-03	3
7	N4	max	.063	2	.04	6	.195	2	4.394e-03	6	3.539e-03	2	-3.897e-04	2
8		min	-.141	4	.003	2	-.29	4	1.383e-03	5	-2.524e-03	4	-1.699e-03	6
9	N5	max	.063	2	-.113	5	.414	5	2.204e-03	1	5.557e-04	3	-4.609e-04	2
10		min	-.143	4	-.362	3	-.089	1	-2.136e-02	5	-7.641e-03	5	-5.602e-03	6

Envelope Joint Displacements (Continued)

	Joint		X [in]	LC	Y [in]	LC	Z [in]	LC	X Rotation [...	LC	Y Rotation [...	LC	Z Rotation [...	LC
11	N6	max	.063	2	.037	6	.188	2	4.394e-03	6	3.539e-03	2	-3.897e-04	2
12		min	-.141	4	.003	2	-.285	4	1.383e-03	5	-2.524e-03	4	-1.699e-03	6
13	N7	max	.063	2	.001	6	.03	2	1.686e-03	6	3.062e-03	2	-1.435e-04	2
14		min	-.141	4	-.006	1	-.128	4	4.251e-04	2	-3.976e-03	4	-7.616e-04	6
15	N8	max	.063	2	-.007	2	.104	4	-7.25e-04	5	1.254e-03	2	-8.51e-04	2
16		min	-.142	4	-.015	4	-.068	2	-3.201e-03	3	-4.958e-03	4	-2.395e-03	6
17	N9	max	.063	2	-.112	5	.399	5	2.204e-03	1	5.557e-04	3	-4.608e-04	2
18		min	-.143	4	-.351	3	-.092	1	-2.136e-02	5	-7.641e-03	5	-5.602e-03	6
19	N10	max	0	6	0	6	0	6	0	6	0	6	0	6
20		min	0	1	0	1	0	1	0	1	0	1	0	1
21	N11	max	.091	1	.009	6	.127	1	2.361e-03	6	4.383e-03	1	-4.402e-05	2
22		min	-.094	5	-.002	1	-.131	5	4.406e-04	2	-3.003e-03	5	-3.534e-04	6
23	N12	max	.092	1	-.025	5	.133	5	4.582e-03	5	-7.664e-04	2	-1.454e-03	5
24		min	-.095	5	-.09	6	-.127	1	-6.412e-04	3	-3.184e-03	4	-7.255e-03	3
25	N13	max	.091	1	.04	6	.262	1	4.464e-03	6	3.907e-03	1	-4.509e-04	2
26		min	-.094	5	.004	2	-.216	5	1.413e-03	2	-2.633e-03	5	-1.717e-03	6
27	N14	max	.092	1	-.12	5	.255	4	1.469e-02	4	-1.154e-03	3	-3.121e-03	2
28		min	-.095	5	-.363	3	-.048	2	-4.936e-04	2	-4.33e-03	4	-6.208e-03	6
29	N15	max	.091	1	.037	6	.254	1	4.464e-03	6	3.907e-03	1	-4.51e-04	2
30		min	-.094	5	.003	2	-.211	5	1.413e-03	2	-2.633e-03	5	-1.717e-03	6
31	N16	max	.091	1	.001	6	.05	1	1.755e-03	4	4.032e-03	1	-3.334e-04	2
32		min	-.095	5	-.006	1	-.07	5	4.014e-04	2	-3.65e-03	5	-7.684e-04	6
33	N17	max	.092	1	-.007	2	.083	5	3.155e-06	5	1.781e-03	1	-4.595e-04	5
34		min	-.095	5	-.015	4	-.117	1	-3.22e-03	3	-2.95e-03	5	-2.292e-03	6
35	N18	max	.092	1	-.112	5	.246	4	1.469e-02	4	-1.154e-03	3	-3.121e-03	2
36		min	-.095	5	-.351	3	-.053	2	-4.936e-04	2	-4.329e-03	4	-6.208e-03	6
37	N19	max	.062	2	.001	6	.019	2	1.662e-03	6	3.062e-03	2	3.08e-05	2
38		min	-.156	4	-.006	1	-.161	4	4.251e-04	2	-3.976e-03	4	-7.615e-04	6
39	N20	max	.042	2	-.007	2	.168	6	-8.992e-04	5	1.254e-03	2	-6.766e-04	2
40		min	-.183	4	-.015	4	-.038	2	-3.2e-03	3	-4.958e-03	4	-2.394e-03	6
41	N21	max	.055	2	.037	6	.148	2	4.384e-03	3	3.539e-03	2	-2.154e-04	2
42		min	-.166	4	.003	2	-.333	4	1.208e-03	5	-2.524e-03	4	-1.699e-03	6
43	N22	max	.132	2	-.112	5	1.306	5	2.198e-03	1	5.557e-04	3	2.708e-03	2
44		min	-.255	6	-.351	3	-.167	1	-2.808e-02	5	-7.641e-03	5	-5.559e-03	6
45	N23	max	.107	1	.001	6	.082	3	1.93e-03	4	4.032e-03	1	-5.079e-04	2
46		min	-.08	5	-.006	1	-.022	5	4.014e-04	2	-3.65e-03	5	-7.685e-04	6
47	N24	max	.121	3	-.007	2	.087	5	1.777e-04	5	1.781e-03	1	-4.596e-04	5
48		min	-.082	5	-.015	4	-.172	3	-3.221e-03	3	-2.95e-03	5	-2.309e-03	3
49	N25	max	.112	1	.037	6	.307	1	4.489e-03	6	3.907e-03	1	-6.256e-04	2
50		min	-.071	5	.003	2	-.155	5	1.413e-03	2	-2.633e-03	5	-1.717e-03	6
51	N26	max	.305	1	-.112	5	.93	4	2.155e-02	4	-1.154e-03	3	-3.89e-03	5
52		min	.037	5	-.351	3	-.07	2	-4.949e-04	2	-4.329e-03	4	-6.936e-03	1
53	N27	max	.004	2	-.002	2	.011	4	-2.37e-04	5	1.365e-03	2	-1.781e-04	5
54		min	-.008	4	-.004	6	-.005	2	-4.206e-04	1	-2.264e-03	4	-4.457e-04	6
55	N28	max	.004	2	0	6	.005	2	6.501e-04	4	1.151e-03	2	-1.714e-04	3
56		min	-.007	4	0	1	-.01	4	3.207e-04	3	-2.326e-03	4	-4.134e-04	4
57	N29	max	.006	1	-.003	2	.007	5	1.124e-03	1	1.621e-03	1	5.147e-04	2
58		min	-.005	5	-.007	6	-.008	1	-7.508e-04	5	-1.737e-03	5	-8.91e-04	4
59	N30	max	.005	1	0	6	.007	1	2.434e-04	3	1.597e-03	1	7.928e-04	5
60		min	-.005	5	0	1	-.006	5	-1.088e-03	5	-1.557e-03	5	-1.387e-04	3
61	N31	max	.048	2	-.009	2	.123	4	5.63e-04	6	2.491e-03	2	-2.403e-03	5
62		min	-.088	4	-.024	6	-.068	2	-5.599e-04	2	-7.163e-03	4	-4.603e-03	6

Envelope Joint Displacements (Continued)

	Joint		X [in]	LC	Y [in]	LC	Z [in]	LC	X Rotation [...	LC	Y Rotation [...	LC	Z Rotation [...	LC
63	N32	max	.042	2	.002	6	.058	2	2.444e-03	4	2.907e-03	2	-1.017e-03	2
64		min	-.093	4	-.002	1	-.129	4	9.641e-04	3	-6.717e-03	4	-1.888e-03	4
65	N33	max	.058	1	-.009	2	.093	5	1.96e-03	5	4.462e-03	1	3.052e-04	5
66		min	-.066	5	-.027	6	-.08	1	-6.48e-04	3	-4.331e-03	5	-5.064e-03	3
67	N34	max	.061	1	.002	6	.085	1	1.088e-03	6	4.246e-03	1	2.734e-05	2
68		min	-.062	5	-.002	1	-.087	5	-4.053e-05	2	-4.531e-03	5	-1.24e-03	6
69	N35	max	0	6	0	6	0	6	4.734e-03	3	2.777e-03	1	-1.056e-03	2
70		min	0	1	0	1	0	1	8.059e-04	5	-1.386e-03	5	-3.4e-03	6
71	N36	max	.068	1	-.112	5	.113	5	1.385e-03	3	-3.314e-04	3	-2.746e-04	2
72		min	-.147	5	-.351	3	-.051	1	3.01e-05	5	-4.531e-03	4	-1.428e-03	4

Envelope AISC 14th(360-10): LRFD Steel Code Checks

	Me...	Shape	Code C...	Loc...	LC	Shear C...	Loc[ft]	Dir	LC	phi*Pn...	phi*P...	phi*Mn...	phi*...	Cb	Eqn
1	M1	L3X3X4	.418	3.3...	6	.074	3.36	z	6	40623...	46656	1.688	3.756	2.221	H2-1
2	M2	L3X3X4	.295	0	4	.023	4.301	z	5	45949...	46656	1.688	3.756	1.068	H2-1
3	M3	L3X3X4	.422	12....	3	.086	9.769	y	4	40623...	46656	1.688	3.756	2.237	H2-1
4	M4	L3X3X4	.364	3.36	6	.060	0	y	6	45691...	46656	1.688	3.756	1.618	H2-1
5	M5	L3X3X4	.207	0	1	.023	0	y	2	45949...	46656	1.688	3.756	1.116	H2-1
6	M6	L3X3X4	.376	12....	3	.049	9.769	z	4	40623...	46656	1.688	3.756	2.225	H2-1
7	M7	PIPE_2.0	.045	5.6...	6	.019	5.667		3	28123...	32130	1.872	1.872	2.27	H1-1b
8	M8	PIPE_2.0	.136	2.3...	6	.061	2.333		3	28123...	32130	1.872	1.872	2.273	H1-1b
9	M9	PIPE_2.0	.037	5.5...	5	.040	5.583		4	28123...	32130	1.872	1.872	1.949	H1-1b
10	M10	PIPE_2.0	.802	4.2...	4	.152	4.219		4	30625...	32130	1.872	1.872	2.263	H1-1b
11	M11	PIPE_1.25	.063	3.3...	6	.011	0		6	14907...	1968...	.801	.801	1	H1-1b*
12	M12	PIPE_1.25	.067	3.3...	3	.069	0		6	14907...	1968...	.801	.801	1.136	H1-1b*
13	M13	PIPE_1.25	.016	1.6...	1	.017	0		6	14907...	1968...	.801	.801	1.136	H1-1b
14	M14	PIPE_1.25	.015	1.6...	5	.051	0		6	14907...	1968...	.801	.801	1	H1-1b
15	M15	SR 3/4	.157	4.1...	6	.015	0		2	1403.7...	1431...	.179	.179	1.872	H1-1b*
16	M16	SR 3/4	.160	4.1...	6	.021	4.166		4	1403.7...	1431...	.179	.179	2.346	H1-1b
17	M17	PIPE_2.0	.089	0	4	.004	0		4	17707...	32130	1.872	1.872	1.121	H1-1b

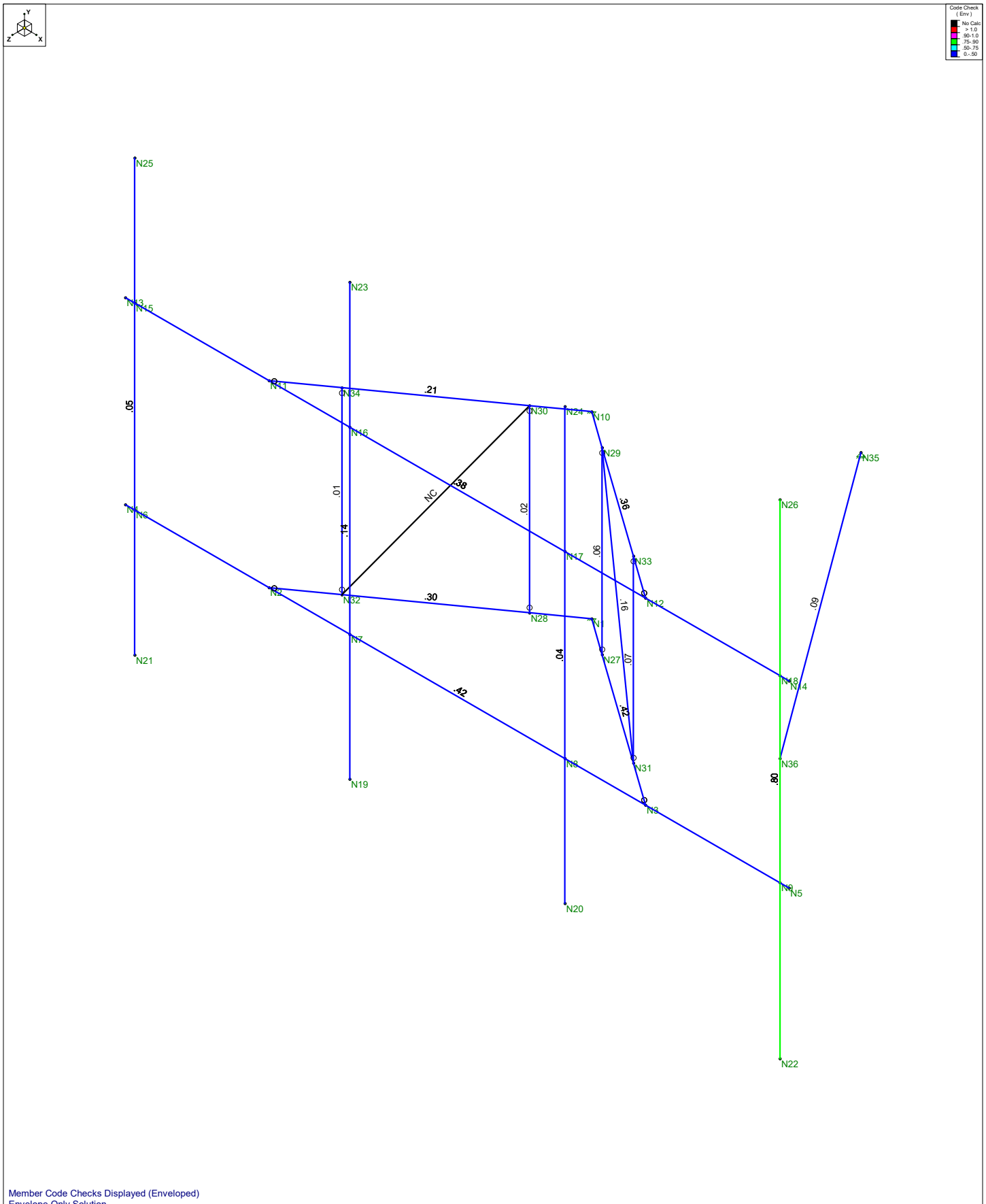

Member Code Checks Displayed (Enveloped)
Envelope Only Solution

Centek		SK - 1
THC	CT11330A_AMA	May 6, 2019 at 10:29 AM
19027.07	Member Unity Check	CT11330A_AMA.r3d

ITEM	PART NO.	DESCRIPTION	QTY.	WEIGHT	NOTE NO.
1	SAB6301	∅2-3/8" O.D. X 64" SCH 40 PIPE NPT 1 END	2	18.98 LBS	
2	SFQV02	SF-QV Transition Swivel Plate	2	9.20 LBS	
3	SFQV01	SF-QV Arm Frame Weldment	1	59.92 LBS	
4	GB-04145	1/2" X 1-1/2" GALV BOLT KIT	4	0.13 LBS	
5	QVPALLET	43 X 72 Pallet for SF-QV Series	1	55.55 LBS	
6	SFQVxx	SF-QV Face Angle (See Table on Sheet 2)	4	24.99 LBS	
7	SFQVHK2	HARDWARE KIT FOR SF-QV SERIES FRAMES	1	128.51 LBS	
8	MTC360601	RIGHT FRAME WELDMENT	1	59.92 LBS	K

REVISIONS

REV.	ZONE	DESCRIPTION	BY	DATE
A		INITIAL RELEASE	MSM	11/30/11
B		UPDATE BOM	MSM	05/29/12
C		ADJUSTED BALLOON NUMBERS ON P.2	DRR	07/11/12
D		REDESIGNED FACE ANGLE ATTACHMENT	MSM	08/21/12
E		CHG 5/8 ALLTHREAD AND SA-BU	MSM	09/12/12
F		UPDATE SFQV10, ADD 1/2" FLAT WASHERS (16EA)	MSM	03/31/14
G	8000006207	REPLACED SFQV12 W SFQV50, SFQV13 W/SFQV51	RJC	12/15/14
H	8000006198	CHANGE FACE ANGLES	MSM	12/16/14
J	8000020217	CHANGE TOWER LEG CLAMPS	MSM	02/17/17
K	8000025675	CHGD RIGHT FRAME WLDMT TO & STIFF ARM MTG	RJC	08/29/17

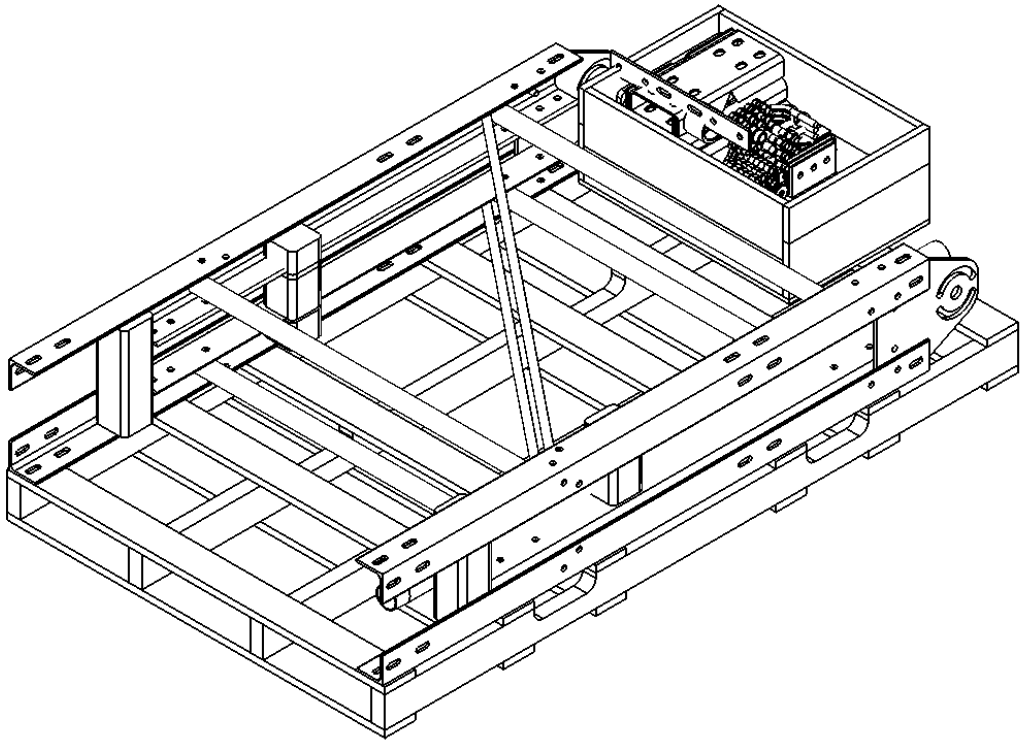

These drawings and specifications are the proprietary property of ANDREW CORPORATION and may be used only for the specific purpose authorized in writing by Andrew Corporation.

ALL DIMENSIONS ARE IN INCHES U.O.S.
TOLERANCES UNLESS OTHERWISE SPECIFIED:

.X = ±	.12	ANGLES	±2°
.XX = ±	.06	FRACTIONS	±1/32
.XXX= ±	.03		

REMOVE BURRS AND BREAK EDGES .005

DO NOT SCALE THIS PRINT

DRAWN BY: MSM	SHEET: 1 of 7	PART NUMBER: SF-QV-B SERIES
CHECKED BY: TP	SCALE: NTS	DESCRIPTION: Sector Frame Quick-V
DATE: 11/30/11	MATERIAL: A36, A529, A500	DRAWING TYPE: ASSEMBLY DRAWING
REVISION: K	FINISH: GALV A123	ANDREW® WESTCHESTER, IL. 60154 U.S.A.
	WEIGHT: SEE TABLE	

ITEM	PART NO.	DESCRIPTION	QTY.	WEIGHT	
1	SFQV01	SF-QV Arm Frame Weldment	1	59.92 LBS	
2	SFQV02	SF-QV Transition Swivel Plate	2	9.20 LBS	
3	SFQV03	Top SF-QV Mount Bracket	1	18.22 LBS	
4	SFQV04	Lower SFQV Mount Bracket	1	18.75 LBS	
5	MTC360613	SPLICE PLATE	8	2.04 LBS	
6	SFQV11	Taper Plate Bushing	2	0.06 LBS	
7	SFQV12	90 Deg Tower Bracket	2	5.31 LBS	
8	SFQV13	SF-QV Back Clamp	2	7.51 LBS	
9	SFQV14	60 Deg Tower Bracket	2	5.22 LBS	
10	GUB-4240	1/2" X 2-1/2" X 4" GALV U-BOLT	11	0.56 LBS	
11	SAB01	FORMED CLAMP	2	1.35 LBS	
12	OS15034	3/4" X 1-1/2" OFFSET COLLAR	1	0.14 LBS	
13	XA2020.01	CROSS OVER ANGLE	3	2.65 LBS	
14	GB-05245	5/8" X 2-1/2" GALV BOLT KIT	6	0.30 LBS	
15	GWF-05	5/8" GALV FLAT WASHER	34	0.06 LBS	
16	GWL-05	5/8" GALV LOCK WASHER	16	0.03 LBS	
17	GN-05	5/8" GALV HEX NUT	24	0.08 LBS	
18	GB-04145	1/2" X 1-1/2" GALV BOLT KIT	32	0.13 LBS	
19	GWF-04	1/2" GALV FLAT WASHER	20	0.03 LBS	
20	GWL-04	1/2" GALV LOCK WASHER	4	0.01 LBS	
21	GN-04	1/2" GALV HEX NUT	4	0.04 LBS	
22	MT-379-8	1/2" X 8" GALV THREADED ROD	2	0.44 LBS	
23	MT-382-16	5/8" X 16" GALV THREADED ROD	8	1.38 LBS	
24	200GC	2" RMC COUPLING	1	1.57 LBS	
25	SAB6301	∅2-3/8" O.D. X 64" SCH 40 PIPE NPT 1 END	2	18.98 LBS	
26	MTC360601	RIGHT FRAME WELDMENT	1	59.92 LBS	K
27	GB-04125	1/2" X 1-1/4" GALV BOLT KIT	1	0.12 LBS	
28	GB-04265	1/2" X 2-3/4" GALV BOLT KIT	1	0.20 LBS	
29	SFQVXX	SF-QV Face Angle (SEE TABLE)	4	24.99 LBS	* SEE TABLE*

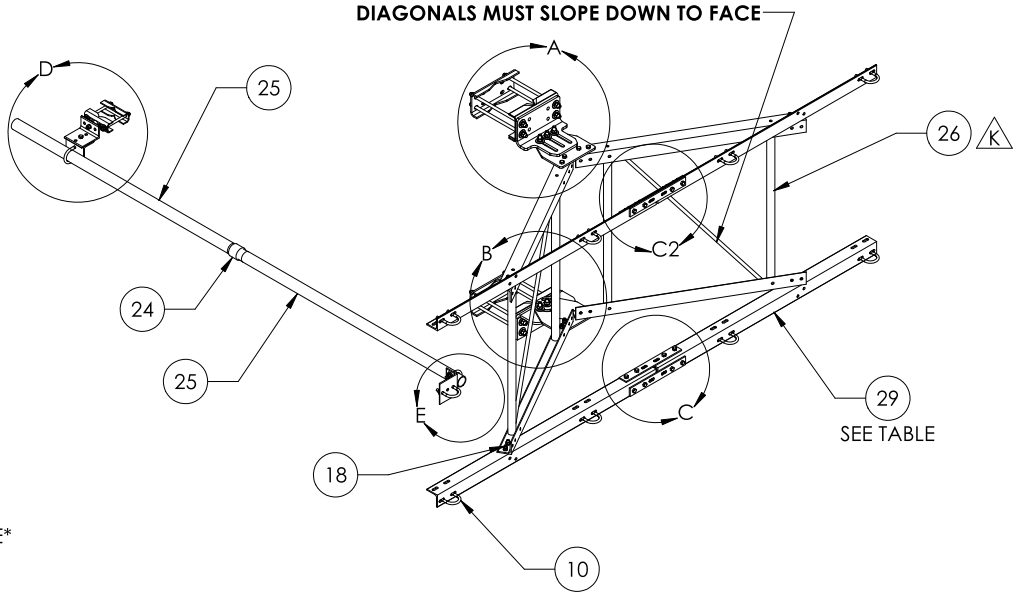

SF-QV-B SERIES TABLE

PART NUMBER	DESCRIPTION	SFQV36	SFQV35	SFQV34	SFQV33	WEIGHT
SF-QV7-B	Quik-Vee Sector Frame, 7'-6" Face, Pipes ordered separately	4	-	-	-	372.85 LBS
SF-QV10-B	Quik-Vee Sector Frame, 10'-6" Face, Pipes ordered separately	-	4	-	-	397.66 LBS
SF-QV12-B	Quik-Vee Sector Frame, 12'-6" Face, Pipes ordered separately	-	-	4	-	416.59 LBS
SF-QV14-B	Quik-Vee Sector Frame, 14'-6" Face, Pipes ordered separately	-	-	-	4	436.08 LBS

NOTES:
1. ALL METRIC DIMENSIONS ARE IN BRACKETS.
2. DETAILS ON SHEET 3 – 5.
3. OVERALL DIMS ON SHEET 5.
4. ASSEMBLY STEPS ON SHEET 3.
5. FITS TOWER LEGS UP TO 8" OD, 8" ANGLE 60°, OR 6" ANGLE 90°.
6. USE TOWER BRACKETS SFQV12 FOR 90° LEGS AND SFQV14 FOR 60° LEGS.

These drawings and specifications are the proprietary property of CommScope Inc. and may be used only for the specific purpose authorized in writing by CommScope Inc.

ALL DIMENSIONS ARE IN INCHES U.O.S.
TOLERANCES UNLESS OTHERWISE SPECIFIED:
.X = ± .12 ANGLES ±2°
.XX = ± .06 FRACTIONS ±1/32
.XXX= ± .03
REMOVE BURRS AND BREAK EDGES .005
DO NOT SCALE THIS PRINT

DRAWN BY: MSM	SHEET: 2 of 7	PART NUMBER: SF-QV-B SERIES
CHECKED BY: TP	SCALE: NTS	DESCRIPTION: Sector Frame Quick-V
DATE: 11/30/11	MATERIAL: A36,A500,A529	DRAWING TYPE: ASSEMBLY DRAWING
REVISION: K	FINISH: GALV A123	ANDREW® WESTCHESTER, IL. 60154 U.S.A.
	WEIGHT: SEE TABLE	

UPPER BRACKET ASSEMBLY

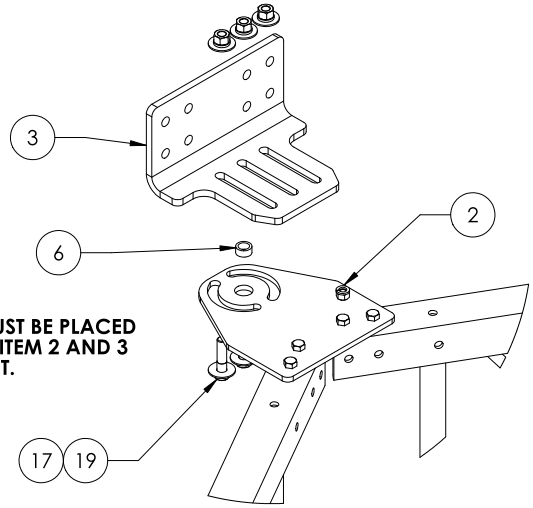

NOTE: ITEM 6 MUST BE PLACED BETWEEN ITEM 2 AND 3 FOR PIVOT.

DETAIL A2
SCALE 1 : 8

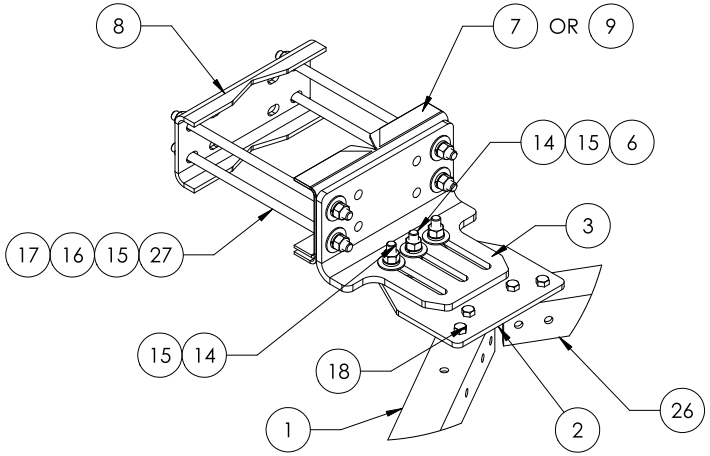

DETAIL A
SCALE 1 : 8

LOWER BRACKET ASSEMBLY

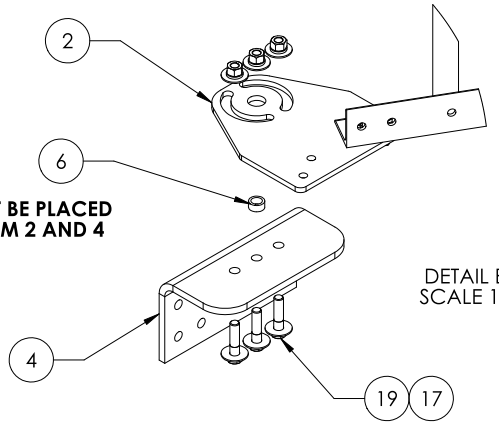

NOTE: ITEM 6 MUST BE PLACED BETWEEN ITEM 2 AND 4 FOR PIVOT.

DETAIL B2
SCALE 1 : 8

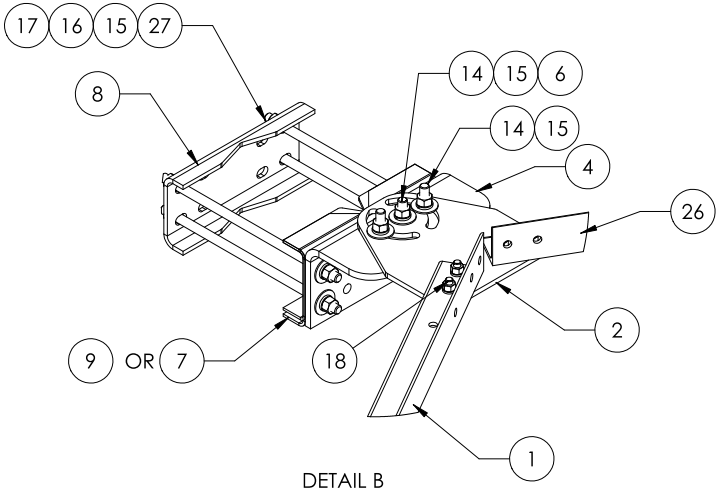

DETAIL B
SCALE 1 : 8

These drawings and specifications are the proprietary property of ANDREW CORPORATION and may be used only for the specific purpose authorized in writing by Andrew Corporation.

ALL DIMENSIONS ARE IN INCHES U.O.S.
TOLERANCES UNLESS OTHERWISE SPECIFIED:

.X = ±	.12	ANGLES	±2°
.XX = ±	.06	FRACTIONS	±1/32
.XXX= ±	.03		

REMOVE BURRS AND BREAK EDGES .005

DO NOT SCALE THIS PRINT

DRAWN BY: MSM	SHEET: 3 of 7	PART NUMBER: SF-QV-B SERIES
CHECKED BY: TP	SCALE: NTS	DESCRIPTION: Sector Frame Quick-V
DATE: 11/30/11	MATERIAL: A36,A500,A529	DRAWING TYPE: ASSEMBLY DRAWING
REVISION: K	FINISH: GALV A123	ANDREW® WESTCHESTER, IL. 60154 U.S.A.
	WEIGHT: SEE TABLE	

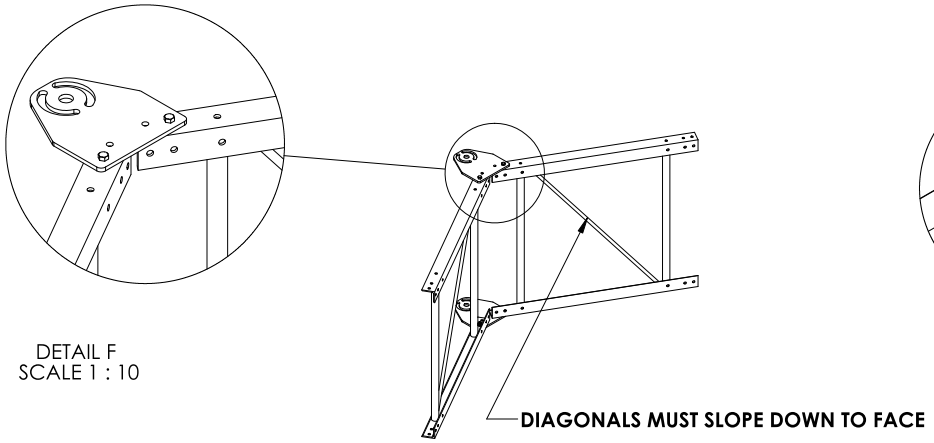

DETAIL F
SCALE 1 : 10

STEP 1 ADD 1/2" X 1-1/2" BOLTS.

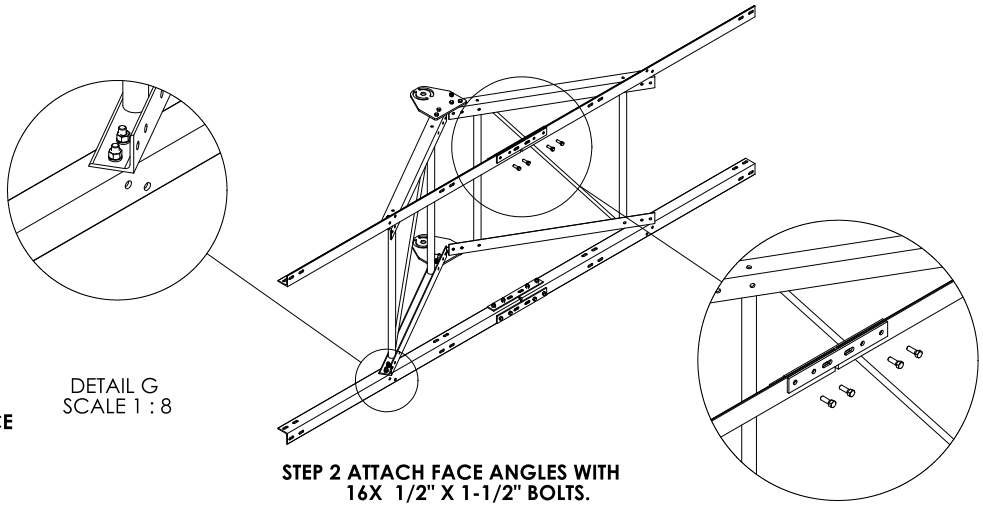

DETAIL G
SCALE 1 : 8

STEP 2 ATTACH FACE ANGLES WITH 16X 1/2" X 1-1/2" BOLTS.

DETAIL H
SCALE 1 : 14

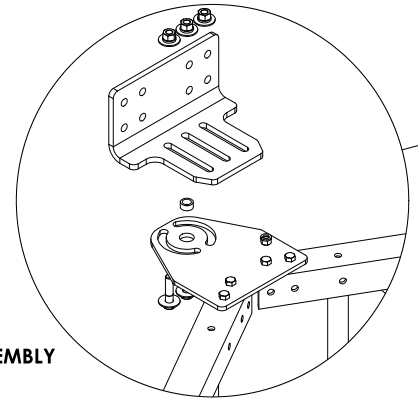

UPPER BRACKET ASSEMBLY
DETAIL J
SCALE 1 : 10

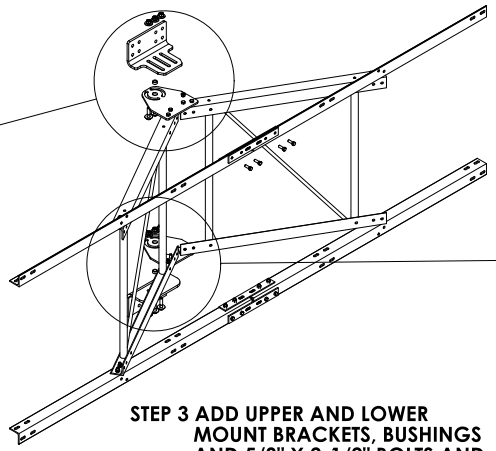

STEP 3 ADD UPPER AND LOWER MOUNT BRACKETS, BUSHINGS AND 5/8" X 2-1/2" BOLTS AND WASHERS.

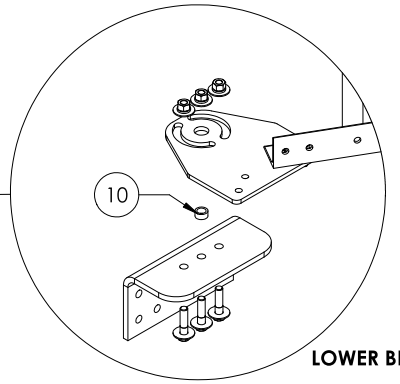

LOWER BRACKET ASSEMBLY
DETAIL K
SCALE 1 : 10

NOTES:

1. **TIGHTEN LOWER MOUNT BRACKET CENTER BOLT AND BUSHING ALLOWING SWIVEL ADJUSTMENT.**
2. **TIGHTEN UPPER MOUNT BRACKET AND CENTER BOLT AFTER SETTING TAPER.**
3. **AFTER SETTING AZMUTH TIGHTEN MOUNT BRACKETS OUTER SWIVEL ADJSUTMENT BOLTS.**

These drawings and specifications are the proprietary property of ANDREW CORPORATION and may be used only for the specific purpose authorized in writing by Andrew Corporation.

ALL DIMENSIONS ARE IN INCHES U.O.S.
TOLERANCES UNLESS OTHERWISE SPECIFIED:

.X = ±	.12	ANGLES	±2°
.XX = ±	.06	FRACTIONS	±1/32
.XXX= ±	.03		

REMOVE BURRS AND BREAK EDGES .005

DO NOT SCALE THIS PRINT

DRAWN BY: MSM	SHEET: 4 of 7	PART NUMBER: SF-QV-B SERIES	
CHECKED BY: TP	SCALE: NTS	DESCRIPTION: Sector Frame Quick-V	
DATE: 11/30/11	MATERIAL: A36, A53, A529	DRAWING TYPE: ASSEMBLY DRAWING	
REVISION: K	FINISH: GALV A123	ANDREW®	WESTCHESTER, IL. 60154 U.S.A.
	WEIGHT: SEE TABLE		

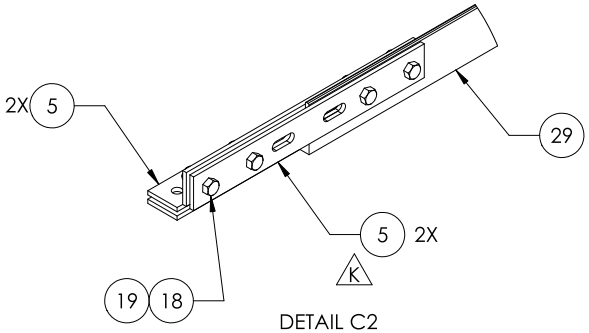

DETAIL C2
SCALE 1 : 6

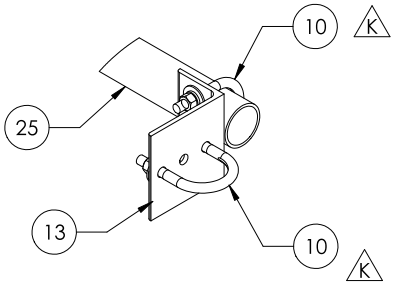

DETAIL E
SCALE 1 : 6

UPPER AND LOWER FACE JOINT DETAIL

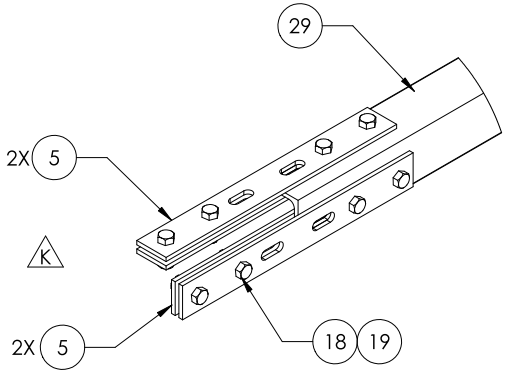

DETAIL C
SCALE 1 : 6

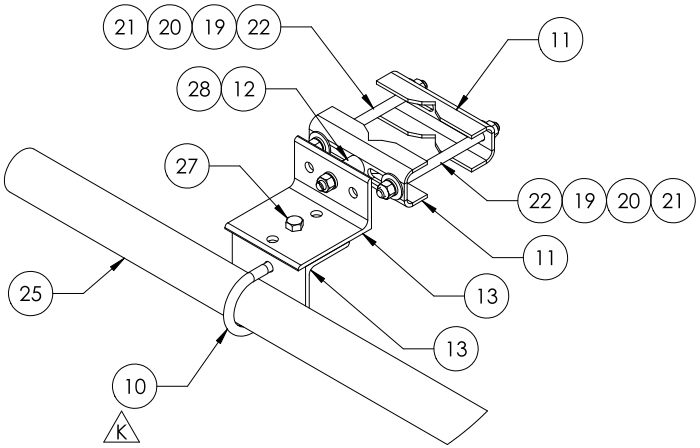

DETAIL D
SCALE 1 : 6

These drawings and specifications are the proprietary property of ANDREW CORPORATION and may be used only for the specific purpose authorized in writing by Andrew Corporation.

ALL DIMENSIONS ARE IN INCHES U.O.S.
TOLERANCES UNLESS OTHERWISE SPECIFIED:

.X = ±	.12	ANGLES	±2°
.XX = ±	.06	FRACTIONS	±1/32
.XXX= ±	.03		

REMOVE BURRS AND BREAK EDGES .005

DO NOT SCALE THIS PRINT

DRAWN BY: MSM	SHEET: 5 of 7	PART NUMBER: SF-QV-B SERIES	
CHECKED BY: TP	SCALE: NTS	DESCRIPTION: Sector Frame Quick-V	
DATE: 11/30/11	MATERIAL: A36,A500,A529	DRAWING TYPE: ASSEMBLY DRAWING	
REVISION: K	FINISH: GALV A123	ANDREW®	WESTCHESTER, IL. 60154 U.S.A.
	WEIGHT: SEE TABLE		

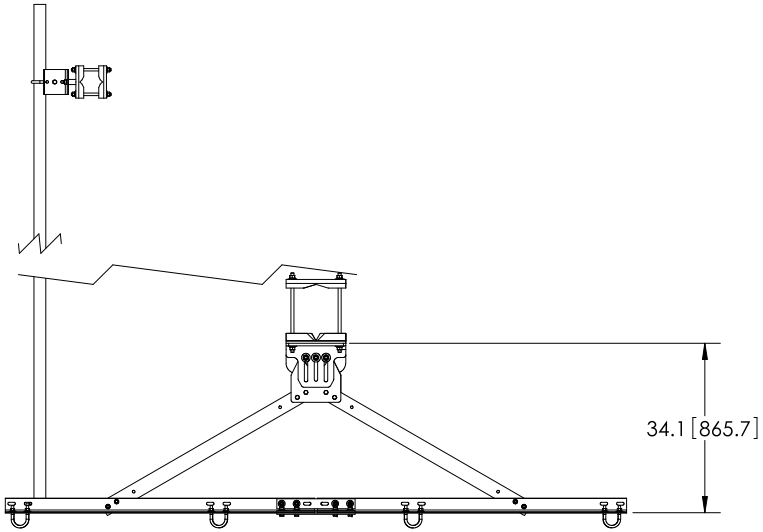

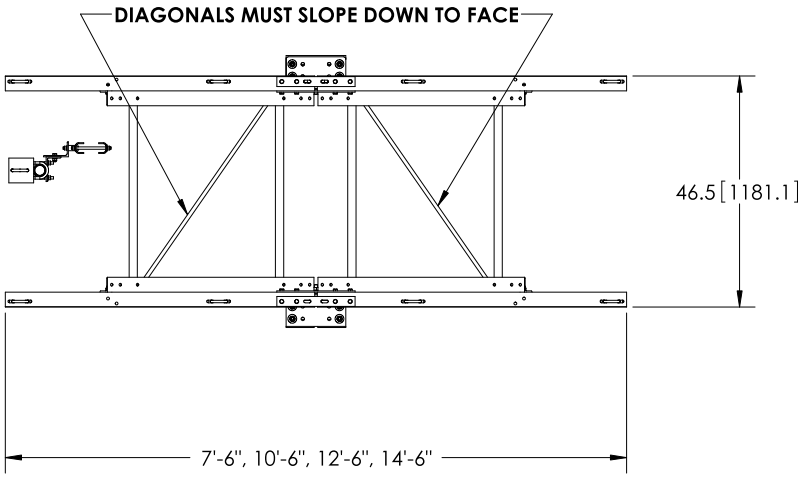

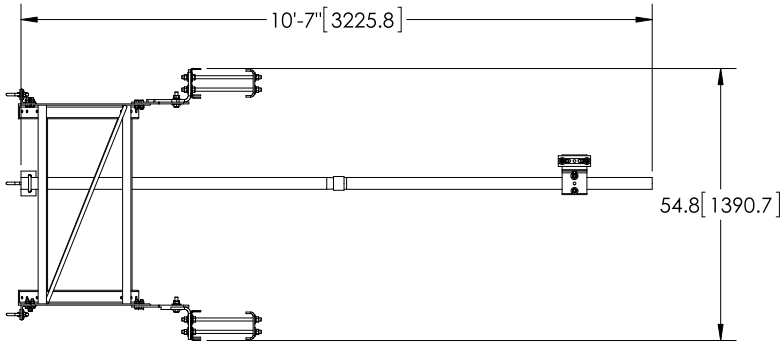

These drawings and specifications are the proprietary property of ANDREW CORPORATION and may be used only for the specific purpose authorized in writing by Andrew Corporation.

ALL DIMENSIONS ARE IN INCHES U.O.S.
TOLERANCES UNLESS OTHERWISE SPECIFIED:

.X = ±	.12	ANGLES	±2°
.XX = ±	.06	FRACTIONS	±1/32
.XXX = ±	.03		

REMOVE BURRS AND BREAK EDGES .005

DO NOT SCALE THIS PRINT

DRAWN BY: MSM	SHEET: 6 of 7	PART NUMBER: SF-QV-B SERIES
CHECKED BY: TP	SCALE: NTS	DESCRIPTION: Sector Frame Quick-V
DATE: 11/30/11	MATERIAL: A36,A500,A529	DRAWING TYPE: ASSEMBLY DRAWING
REVISION: K	FINISH: GALV A123	ANDREW® WESTCHESTER, IL. 60154 U.S.A.
	WEIGHT: SEE TABLE	

ROUND LEG SET-UP

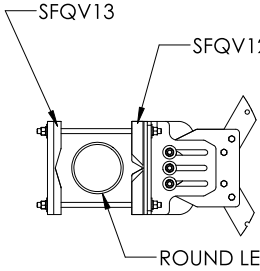

DETAIL P
SCALE 1 : 16

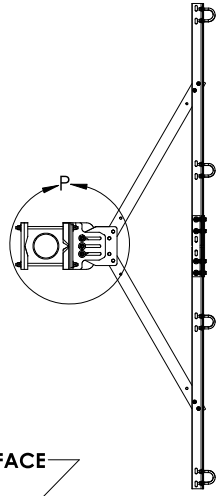

DIAGONALS MUST SLOPE DOWN TO FACE

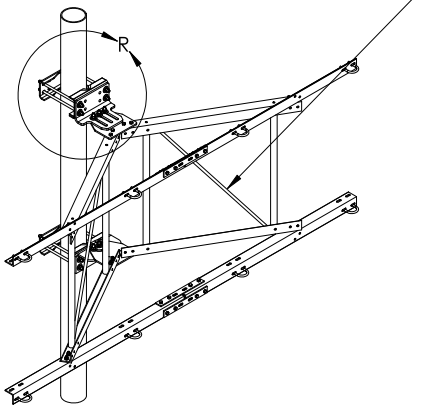

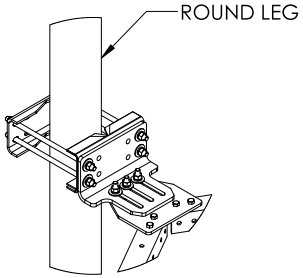

DETAIL R
SCALE 1 : 16

60° LEG SET-UP

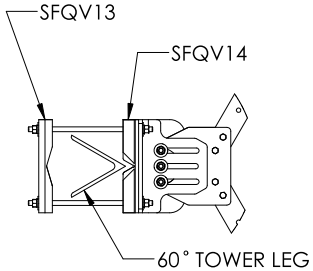

DETAIL T
SCALE 1 : 16

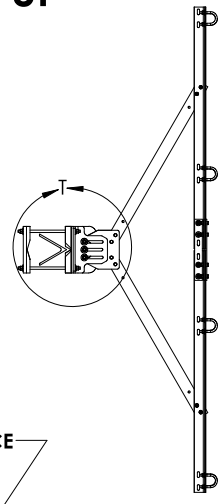

DIAGONALS MUST SLOPE DOWN TO FACE

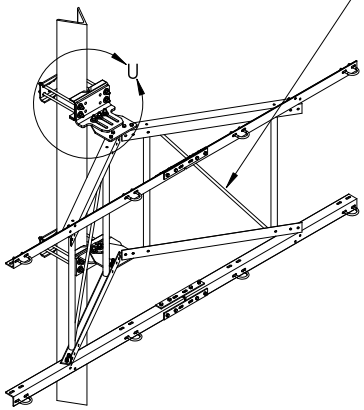

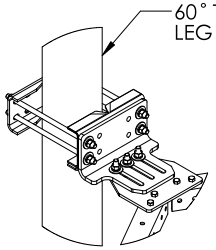

DETAIL U
SCALE 1 : 16

90° LEG SET-UP

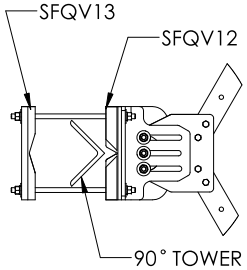

DETAIL W
SCALE 1 : 16

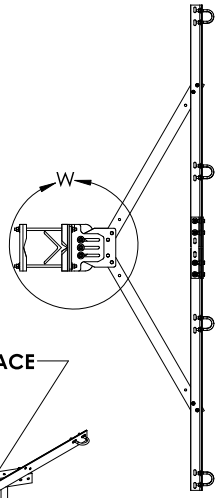

DIAGONALS MUST SLOPE DOWN TO FACE

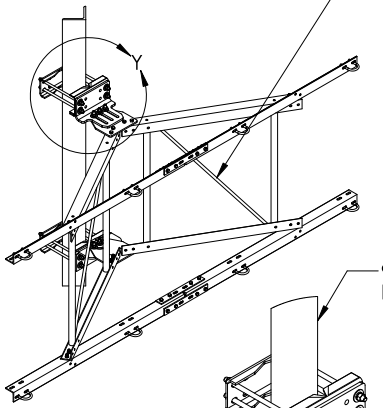

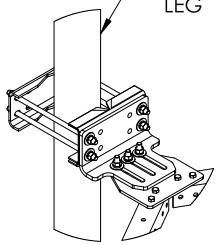

DETAIL Y
SCALE 1 : 16

These drawings and specifications are the proprietary property of ANDREW CORPORATION and may be used only for the specific purpose authorized in writing by Andrew Corporation.

ALL DIMENSIONS ARE IN INCHES U.O.S.
TOLERANCES UNLESS OTHERWISE SPECIFIED:

.X = ±	.12	ANGLES	±2°
.XX = ±	.06	FRACTIONS	±1/32
.XXX= ±	.03		

REMOVE BURRS AND BREAK EDGES .005

DO NOT SCALE THIS PRINT

DRAWN BY: MSM	SHEET: 7 of 7	PART NUMBER: SF-QV-B SERIES	
CHECKED BY: TP	SCALE: NTS	DESCRIPTION: Sector Frame Quick-V	
DATE: 11/30/11	MATERIAL: A36,A500,A529	DRAWING TYPE: ASSEMBLY DRAWING	
REVISION: K	FINISH: GALV A123	ANDREW®	WESTCHESTER, IL. 60154 U.S.A.
	WEIGHT: SEE TABLE		

RAN Template:	A&L Template:	Power System Template:
67D93D4 Hybrid	67D93D4_1QP+2HP (U21 Market)	Custom

CT11330A_L600_2.1_draft

Section 1 - Site Information

Site ID: CT11330A
Status: Draft
Version: 2.1
Project Type: L600
Approved: Not Approved
Approved By: Not Approved
Last Modified: 4/17/2019 9:3:01 AM
Last Modified By: GSM1900\AMurill9

Site Name: East Lyme/ Rt 1_1
Site Class: Self Support Tower
Site Type: Structure Non Building
Plan Year: 2019
Market: CONNECTICUT
Vendor: Ericsson
Landlord: <undefined>

Latitude: 41.3659660000
Longitude: -72.2661510000
Address: 6 Stone Ranch Rd
City, State: East Lyme, CT
Region: NORTHEAST

DRAFT

RAN Template: 67D93D4 Hybrid			**AL Template:** 67D93D4_1QP+2HP (U21 Market)	
Sector Count: 3	**Antenna Count:** 3	**Coax Line Count:** 0	**TMA Count:** 0	**RRU Count:** 9

Section 2 - Existing Template Images

RAN_4B.jpg

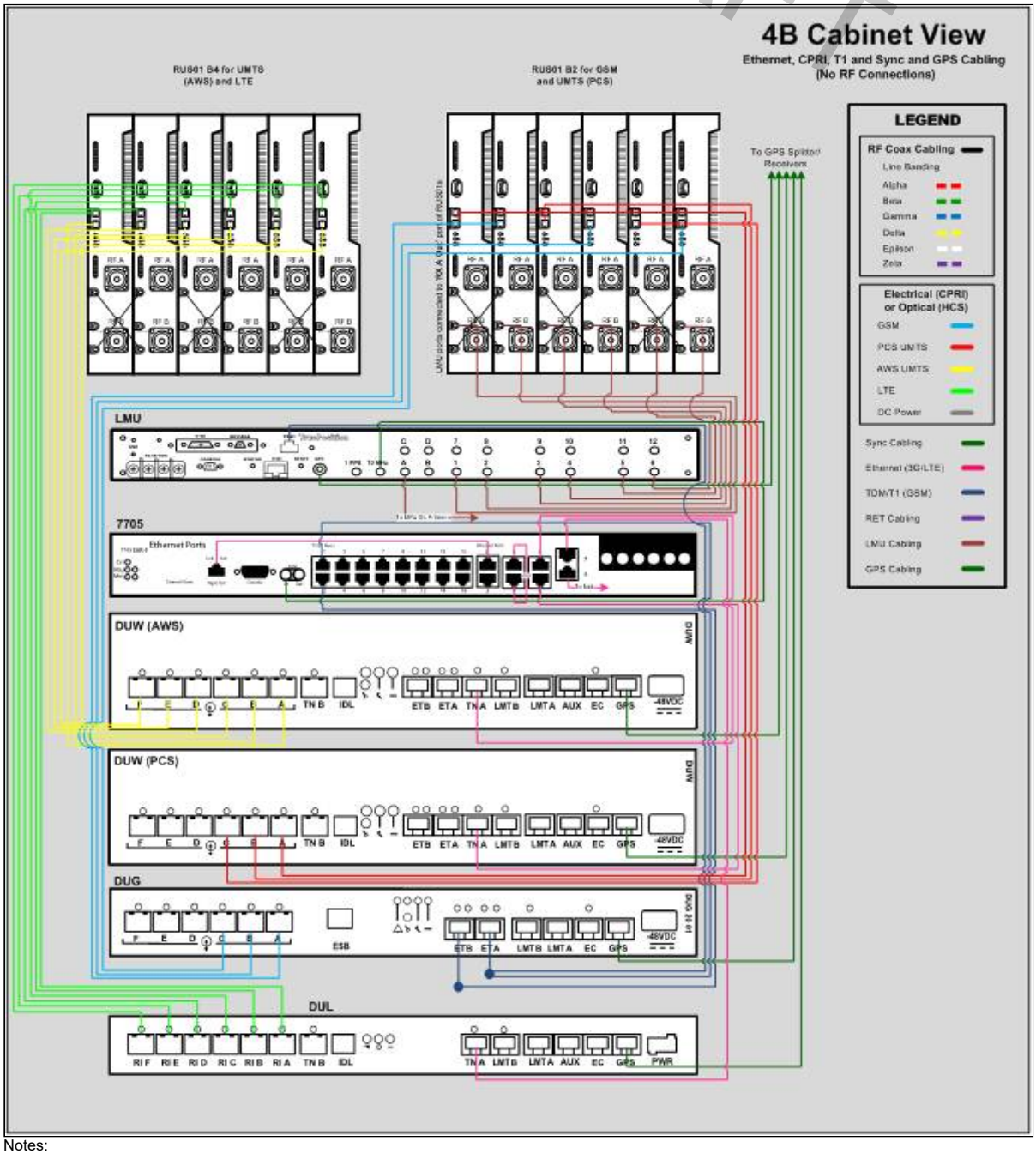

Notes:

AL_4B.jpg

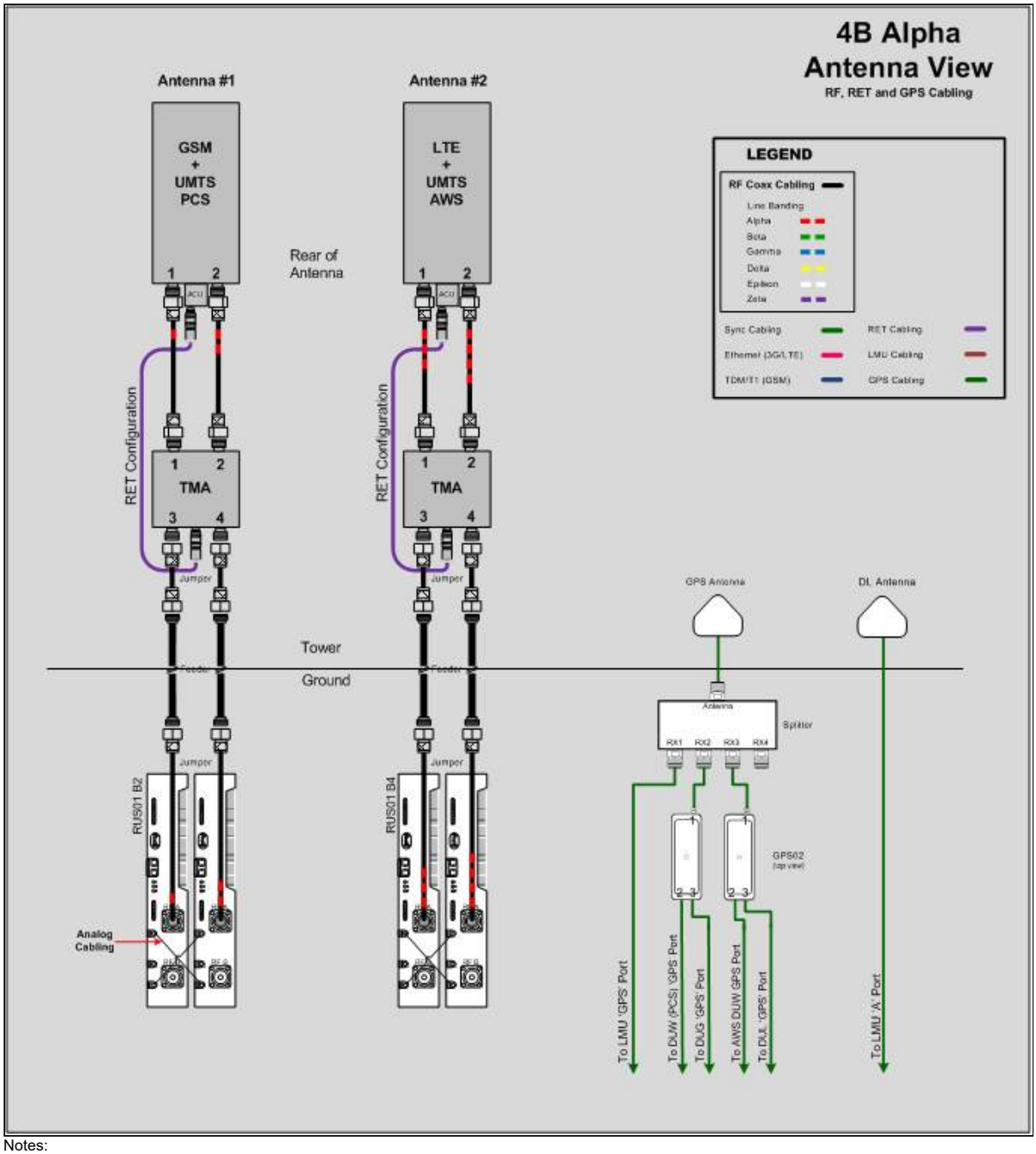
4B Alpha
Antenna View
RF, RET and GPS Cabling
Antenna #1
Antenna #2
GSM
+
UMTS
PCS
LTE
+
UMTS
AWS
Rear of
Antenna
LEGEND
RF Coax Cabling
Line Banding
Alpha
Beta
Gamma
Delta
Epsilon
Zeta
Sync Cabling
Ethernet (3G/LTE)
TDM/T1 (GSM)
RET Cabling
LMU Cabling
GPS Cabling
RET Configuration
TMA
Jumper
Tower
Ground
Feeder
GPS Antenna
DL Antenna
Antenna
Splitter
Rx1
Rx2
Rx3
Rx4
RUS01 B2
RUS01 B4
GPS02
(top view)
Analog
Cabling
To LMU 'GPS' Port
To DUW (PCS) 'GPS' Port
To DUG 'GPS' Port
To AWS DUW 'GPS' Port
To DUL 'GPS' Port
To LMU 'A' Port

Notes:

Section 3 - Proposed Template Images

67D93D4_1QP+2HP (U21 Market).jpg

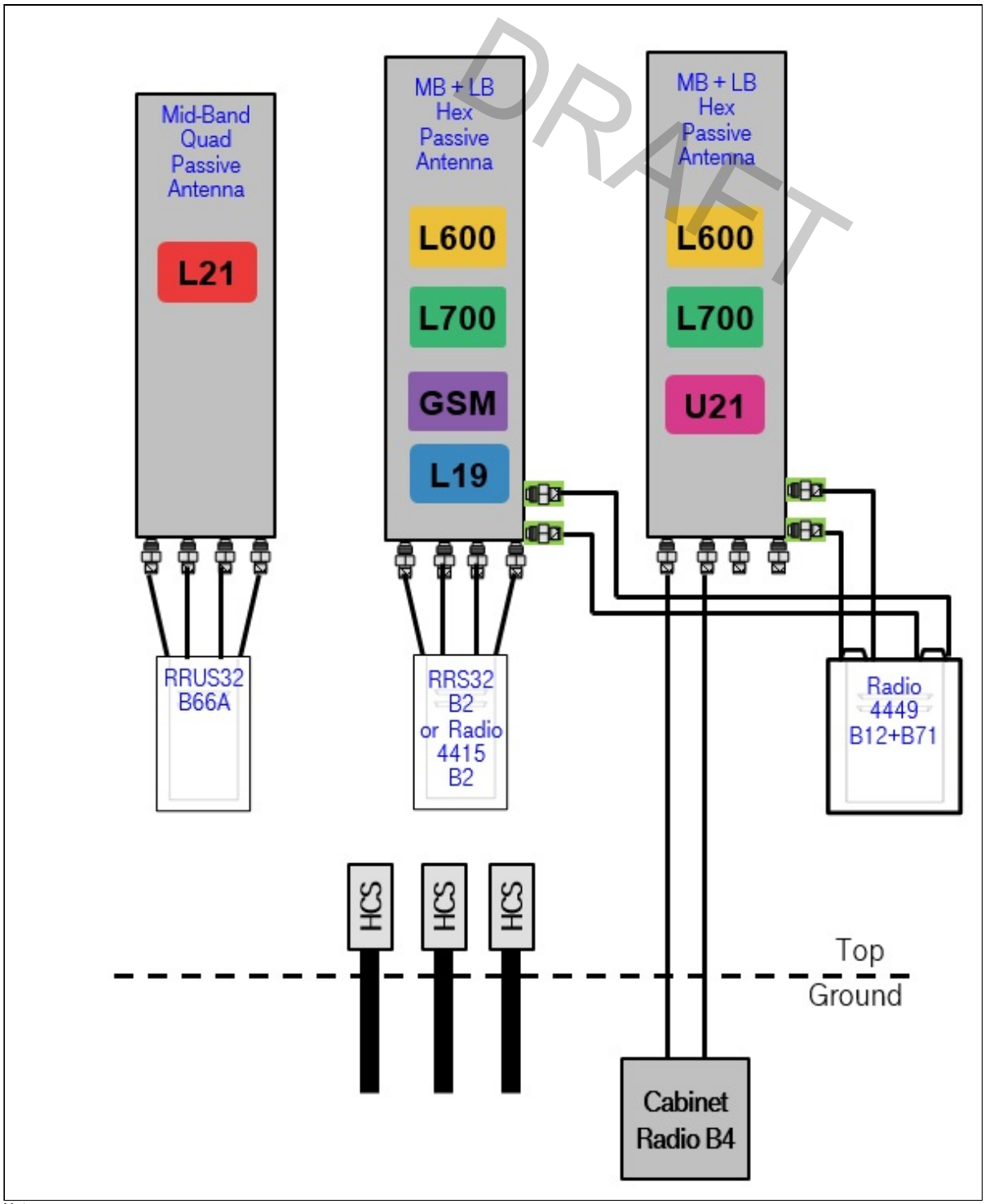

Notes:

Section 4 - Siteplan Images

----- This section is intentionally blank. -----

DRAFT

RAN Template:	A&L Template:	Power System Template:
67D93D4 Hybrid	67D93D4_1QP+2HP (U21 Market)	Custom

CT11330A_L600_2.1_draft

Section 5 - RAN Equipment

DRAFT

Existing RAN Equipment	
Template: 4B Outdoor	
Enclosure	1
Enclosure Type	RBS 6102
Baseband	DUW30 (U1900); DUG20 (G1900); DUS41 (L2100)
Radio	RUS01 B2 (x3) (G1900); RUS01 B2 (x3) (U1900); RUS01 B4 (x6) (L2100)

Proposed RAN Equipment	
Template: 67D93D4 Hybrid	
Enclosure	1
Enclosure Type	RBS 6102
Baseband	DUW30 (U1900); DUG20 (G1900); BB 6630 (N600 (DARK)); BB 6630 (L2100, L1900, L700, L600)
Hybrid Cable System	Ericsson 6x12 HCS *Select Length & AWG* (x3)

RAN Scope of Work:

Swap (1) DUS41 with (1) BB 6630 and add (1) BB 6630.
Remove all cabinet radios. Remove (6) Diplexers, (6) coax and (6) TMAs.
Swap (3) existing EMS antennas with (3) LB/MB Octa 8' antennas.
Add (3) Radio 4449 (L600/L700), add (3) Radio 4415 B25 (GSM/U1900) and add (3) Radio 4415 B66 (L2100).

RAN Template:	A&L Template:	Power System Template:
67D93D4 Hybrid	67D93D4_1QP+2HP (U21 Market)	Custom

CT11330A_L600_2.1_draft

Section 6 - A&L Equipment

DRAFT

Existing Template: 4B_2DP
Proposed Template: 67D93D4_1QP+2HP (U21 Market)

Sector 1 (Existing) view from behind	
Coverage Type	A - Outdoor Macro
Antenna	1
Antenna Model	EMS - RR90-17-00DP (Dual)
Azimuth	0
M. Tilt	0
Height	112
Ports	P1
Active Tech.	U1900 L2100 G1900
Dark Tech.	
Restricted Tech.	
Decomm. Tech.	
E. Tilt	2
Cables	1-1/4" Coax - 160 ft. **(x2)**
TMAs	Generic Twin Style 3B - PCS+AWS (AtAntenna)
Diplexers / Combiners	CommScope AWS/PCS - ECC1920-VPUB (AtCabinet)
Radio	
Sector Equipment	

Unconnected Equipment:

Scope of Work:

RAN Template:	A&L Template:	Power System Template:
67D93D4 Hybrid	67D93D4_1QP+2HP (U21 Market)	Custom

CT11330A_L600_2.1_draft

Sector 1 (Proposed) view from behind				
Coverage Type	A - Outdoor Macro			
Antenna	1			
Antenna Model	RFS - APXVAARR24_43-U-NA20 (Octo)			
Azimuth	0			
M. Tilt	0			
Height	112			
Ports	P1	P2	P3	P4
Active Tech.	L700 L600	L700 L600	U1900 G1900	L2100
Dark Tech.				
Restricted Tech.				
Decomm. Tech.				
E. Tilt	2	2	2	2
Cables				
TMAs				
Diplexers / Combiners				
Radio	Radio 4449 B71+B12 (At Antenna)	SHARED Radio 4449 B71+B12 (At Antenna)	Radio 4415 B25 (At Antenna)	Radio 4415 B66A (At Antenna)
Sector Equipment				

Unconnected Equipment:

Scope of Work:

Swap (1) existing EMS antenna with (1) LB/MB Octa 8' antenna. Remove (2) coax and (2) TMAs.
Add (1) Radio 4449 (L600/L700), add (1) Radio 4415 B25 (GSM/U1900) and add (1) Radio 4415 B66 (L2100).

*A dashed border indicates shared equipment. Any connected equipment is denoted with the SHARED keyword.

RAN Template:	A&L Template:	Power System Template:
67D93D4 Hybrid	67D93D4_1QP+2HP (U21 Market)	Custom

CT11330A_L600_2.1_draft

Sector 2 (Existing) view from behind	
Coverage Type	A - Outdoor Macro
Antenna	1
Antenna Model	EMS - RR90-17-00DP (Dual)
Azimuth	120
M. Tilt	0
Height	112
Ports	P1
Active Tech.	U1900 L2100 G1900
Dark Tech.	
Restricted Tech.	
Decomm. Tech.	
E. Tilt	2
Cables	1-1/4" Coax - 160 ft. (x2)
TMAs	Generic Twin Style 3B - PCS+AWS (AtAntenna)
Diplexers / Combiners	CommScope AWS/PCS - ECC1920-VPUB (AtCabinet)
Radio	
Sector Equipment	

Unconnected Equipment:

Scope of Work:

RAN Template:	A&L Template:	Power System Template:
67D93D4 Hybrid	67D93D4_1QP+2HP (U21 Market)	Custom

CT11330A_L600_2.1_draft

Sector 2 (Proposed) view from behind				
Coverage Type	A - Outdoor Macro			
Antenna	1			
Antenna Model	RFS - APXVAARR24_43-U-NA20 (Octo)			
Azimuth	120			
M. Tilt	0			
Height	112			
Ports	P1	P2	P3	P4
Active Tech.	L700 L600	L700 L600	U1900 G1900	L2100
Dark Tech.				
Restricted Tech.				
Decomm. Tech.				
E. Tilt	2	2	2	2
Cables				
TMAs				
Diplexers / Combiners				
Radio	Radio 4449 B71+B12 (At Antenna)	SHARED Radio 4449 B71+B12 (At Antenna)	Radio 4415 B25 (At Antenna)	Radio 4415 B66A (At Antenna)
Sector Equipment				

Unconnected Equipment:

Scope of Work:

Swap (1) existing EMS antenna with (1) LB/MB Octa 8' antenna. Remove (2) coax and (2) TMAs.
Add (1) Radio 4449 (L600/L700), add (1) Radio 4415 B25 (GSM/U1900) and add (1) Radio 4415 B66 (L2100).

*A dashed border indicates shared equipment. Any connected equipment is denoted with the SHARED keyword.

RAN Template:	A&L Template:	Power System Template:
67D93D4 Hybrid	67D93D4_1QP+2HP (U21 Market)	Custom

CT11330A_L600_2.1_draft

Sector 3 (Existing) view from behind	
Coverage Type	A - Outdoor Macro
Antenna	1
Antenna Model	EMS - RR90-17-00DP (Dual)
Azimuth	220
M. Tilt	0
Height	112
Ports	P1
Active Tech.	U1900 L2100 G1900
Dark Tech.	
Restricted Tech.	
Decomm. Tech.	
E. Tilt	2
Cables	1-1/4" Coax - 160 ft. **(x2)**
TMAs	Generic Twin Style 3B - PCS+AWS (AtAntenna)
Diplexers / Combiners	CommScope AWS/PCS - ECC1920-VPUB (AtCabinet)
Radio	
Sector Equipment	

Unconnected Equipment:

Scope of Work:

RAN Template:	A&L Template:	Power System Template:
67D93D4 Hybrid	67D93D4_1QP+2HP (U21 Market)	Custom

CT11330A_L600_2.1_draft

Sector 3 (Proposed) view from behind				
Coverage Type	A - Outdoor Macro			
Antenna	1			
Antenna Model	RFS - APXVAARR24_43-U-NA20 (Octo)			
Azimuth	220			
M. Tilt	0			
Height	112			
Ports	P1	P2	P3	P4
Active Tech.	L700 L600	L700 L600	U1900 G1900	L2100
Dark Tech.				
Restricted Tech.				
Decomm. Tech.				
E. Tilt	2	2	2	2
Cables				
TMAs				
Diplexers / Combiners				
Radio	Radio 4449 B71+B12 (At Antenna)	SHARED Radio 4449 B71+B12 (At Antenna)	Radio 4415 B25 (At Antenna)	Radio 4415 B66A (At Antenna)
Sector Equipment				

Unconnected Equipment:

Scope of Work:

Swap (1) existing EMS antenna with (1) LB/MB Octa 8' antenna. Remove (2) coax and (2) TMAs.
Add (1) Radio 4449 (L600/L700), add (1) Radio 4415 B25 (GSM/U1900) and add (1) Radio 4415 B66 (L2100).

*A dashed border indicates shared equipment. Any connected equipment is denoted with the SHARED keyword.

RAN Template:	A&L Template:	Power System Template:
67D93D4 Hybrid	67D93D4_1QP+2HP (U21 Market)	Custom

CT11330A_L600_2.1_draft

Section 7 - Power Systems Equipment

DRAFT

Existing Power Systems Equipment

----- This section is intentionally blank. -----

Proposed Power Systems Equipment

About AECOM

AECOM (NYSE: ACM) is a global provider of professional technical and management support services to a broad range of markets, including transportation, facilities, environmental, energy, water and government. With approximately 45,000 employees around the world, AECOM is a leader in all of the key markets that it serves. AECOM provides a blend of global reach, local knowledge, innovation, and collaborative technical excellence in delivering solutions that enhance and sustain the world's built, natural, and social environments. A Fortune 500 company, AECOM serves clients in more than 100 countries and has annual revenue in excess of $6 billion.

More information on AECOM and its services can be found at www.aecom.com.

500 Enterprise Drive, Suite 3B
Rocky Hill, CT 06067
860-529-8882
Fax: 860-529-3991

EBI Consulting

environmental | engineering | due diligence

RADIO FREQUENCY EMISSIONS ANALYSIS REPORT EVALUATION OF HUMAN EXPOSURE POTENTIAL TO NON-IONIZING EMISSIONS

T-Mobile Existing Facility

Site ID: CT11330A

East Lyme/Rt 1_1
6 Stone Ranch Road
East Lyme, Connecticut 06333

May 17, 2019

EBI Project Number: 6219001670

Site Compliance Summary	
Compliance Status:	**COMPLIANT**
Site total MPE% of FCC general population allowable limit:	**5.43%**

21 B Street, Burlington, MA 01803 · Tel: (781) 273.2500 · Fax: (781) 273.3311

May 17, 2019

T-Mobile
Attn: Jason Overbey, RF Manager
35 Griffin Road South
Bloomfield, Connecticut 06002

Emissions Analysis for Site: CT11330A - East Lyme/Rt 1_1

EBI Consulting was directed to analyze the proposed T-Mobile facility located at **6 Stone Ranch Road** in **East Lyme, Connecticut** for the purpose of determining whether the emissions from the Proposed T-Mobile Antenna Installation located on this property are within specified federal limits.

All information used in this report was analyzed as a percentage of current Maximum Permissible Exposure (% MPE) as listed in the FCC OET Bulletin 65 Edition 97-01and ANSI/IEEE Std C95.1. The FCC regulates Maximum Permissible Exposure in units of microwatts per square centimeter ($\mu W/cm^2$). The number of $\mu W/cm^2$ calculated at each sample point is called the power density. The exposure limit for power density varies depending upon the frequencies being utilized. Wireless Carriers and Paging Services use different frequency bands each with different exposure limits; therefore, it is necessary to report results and limits in terms of percent MPE rather than power density.

All results were compared to the FCC (Federal Communications Commission) radio frequency exposure rules, 47 CFR 1.1307(b)(1) – (b)(3), to determine compliance with the Maximum Permissible Exposure (MPE) limits for General Population/Uncontrolled environments as defined below.

General population/uncontrolled exposure limits apply to situations in which the general population may be exposed or in which persons who are exposed as a consequence of their employment may not be made fully aware of the potential for exposure or cannot exercise control over their exposure. Therefore, members of the general population would always be considered under this category when exposure is not employment related, for example, in the case of a telecommunications tower that exposes persons in a nearby residential area.

Public exposure to radio frequencies is regulated and enforced in units of microwatts per square centimeter ($\mu W/cm^2$). The general population exposure limits for the 600 MHz and 700 MHz frequency bands are approximately 400 $\mu W/cm^2$ and 467 $\mu W/cm^2$, respectively. The general population exposure limit for the 1900 MHz (PCS), 2100 MHz (AWS) and 11 GHz frequency bands is 1000 $\mu W/cm^2$. Because each carrier will be using different frequency bands, and each frequency band has different exposure limits, it is necessary to report percent of MPE rather than power density.

Occupational/controlled exposure limits apply to situations in which persons are exposed as a consequence of their employment and in which those persons who are exposed have been made fully aware of the potential for exposure and can exercise control over their exposure. Occupational/controlled exposure limits also apply where exposure is of a transient nature as a result of incidental passage through a location where exposure levels may be above general population/uncontrolled limits (see below), as long as the exposed person has been made fully aware of the potential for exposure and can exercise control over his or her exposure by leaving the area or by some other appropriate means.

Additional details can be found in FCC OET 65.

CALCULATIONS

Calculations were done for the proposed T-Mobile Wireless antenna facility located at 6 Stone Ranch Road in East Lyme, Connecticut using the equipment information listed below. All calculations were performed per the specifications under FCC OET 65. Since T-Mobile is proposing highly focused directional panel antennas, which project most of the emitted energy out toward the horizon, all calculations were performed assuming a lobe representing the maximum gain of the antenna per the antenna manufacturer's supplied specifications, minus 10 dB for directional panel antennas and 20 dB for highly focused parabolic microwave dishes, was focused at the base of the tower. For this report, the sample point is the top of a 6-foot person standing at the base of the tower.

For all calculations, all equipment was calculated using the following assumptions:

1) 2 LTE channel (600 MHz Band) was considered for each sector of the proposed installation. These Channels have a transmit power of 30 Watts per Channel.

2) 2 LTE channels (700 MHz Band) were considered for each sector of the proposed installation. These Channels have a transmit power of 30 Watts per Channel.

3) 4 GSM channels (PCS Band - 1900 MHz) were considered for each sector of the proposed installation. These Channels have a transmit power of 30 Watts per Channel.

4) 2 UMTS channels (PCS Band - 1900 MHz) were considered for each sector of the proposed installation. These Channels have a transmit power of 30 Watts per Channel.

5) 2 LTE channels (AWS Band – 2100 MHz) were considered for each sector of the proposed installation. These Channels have a transmit power of 60 Watts per Channel.

6) All radios at the proposed installation were considered to be running at full power and were uncombined in their RF transmissions paths per carrier prescribed configuration. Per FCC OET Bulletin No. 65 - Edition 97-01 recommendations to achieve the maximum anticipated value at each sample point, all power levels emitting from the proposed antenna installation are increased by a factor of 2.56 to account for possible in-phase reflections from the surrounding environment. This is rarely the case, and if so, is never continuous.

7) For the following calculations, the sample point was the top of a 6-foot person standing at the base of the tower. The maximum gain of the antenna per the antenna manufacturer's supplied specifications, minus 10 dB for directional panel antennas and 20 dB for highly focused parabolic microwave dishes, was used in this direction. This value is a very conservative estimate as gain reductions for these particular antennas are typically much higher in this direction.

8) The antennas used in this modeling are the RFS APXVAARR24_43-U-NA20 for the 600 MHz / 700 MHz / 1900 MHz / 1900 MHz / 2100 MHz channel(s) in Sector A, the RFS APXVAARR24_43-U-NA20 for the 600 MHz / 700 MHz / 1900 MHz / 1900 MHz / 2100 MHz channel(s) in Sector B, the RFS APXVAARR24_43-U-NA20 for the 600 MHz / 700 MHz / 1900 MHz / 1900 MHz / 2100 MHz channel(s) in Sector C.. This is based on feedback from the carrier with regard to anticipated antenna selection. All Antenna gain values and associated transmit power levels are shown in the Site Inventory and Power Data table below. The maximum gain of the antenna per the antenna manufacturer's supplied specifications, minus 10 dB for directional panel antennas and 20 dB for highly focused parabolic microwave dishes, was used for all calculations. This value is a very conservative estimate as gain reductions for these particular antennas are typically much higher in this direction.

9) The antenna mounting height centerline of the proposed antennas is 112 feet above ground level (AGL).

10) Emissions values for additional carriers were taken from the Connecticut Siting Council active database. Values in this database are provided by the individual carriers themselves.

11) All calculations were done with respect to uncontrolled / general population threshold limits.

T-Mobile Site Inventory and Power Data

Sector:	A	Sector:	B	Sector:	C
Antenna #:	1	Antenna #:	1	Antenna #:	1
Make / Model:	RFS APXVAARR24_43-U-NA20	Make / Model:	RFS APXVAARR24_43-U-NA20	Make / Model:	RFS APXVAARR24_43-U-NA20
Frequency Bands:	600 MHz / 700 MHz / 1900 MHz / 1900 MHz / 2100 MHz	Frequency Bands:	600 MHz / 700 MHz / 1900 MHz / 1900 MHz / 2100 MHz	Frequency Bands:	600 MHz / 700 MHz / 1900 MHz / 1900 MHz / 2100 MHz
Gain:	12.95 dBd / 13.35 dBd / 15.65 dBd / 15.65 dBd / 16.35 dBd	Gain:	12.95 dBd / 13.35 dBd / 15.65 dBd / 15.65 dBd / 16.35 dBd	Gain:	12.95 dBd / 13.35 dBd / 15.65 dBd / 15.65 dBd / 16.35 dBd
Height (AGL):	112 feet	Height (AGL):	112 feet	Height (AGL):	112 feet
Channel Count:	12	Channel Count:	12	Channel Count:	12
Total TX Power (W):	420 Watts	Total TX Power (W):	420 Watts	Total TX Power (W):	420 Watts
ERP (W):	14,270.40	ERP (W):	14,270.40	ERP (W):	14,270.40
Antenna A1 MPE %:	**5.02%**	Antenna B1 MPE %:	**5.02%**	Antenna C1 MPE %:	**5.02%**

Site Composite MPE %	
Carrier	**MPE %**
T-Mobile (Max at Sector A):	5.02%
NU/CL&P	0.04%
Unknown Carrier 1	0.37%
Site Total MPE % :	5.43%

T-Mobile Sector A Total:	5.02%
T-Mobile Sector B Total:	5.02%
T-Mobile Sector C Total:	5.02%
Site Total:	5.43%

T-Mobile Maximum MPE Power Values (Sector A)

T-Mobile Frequency Band / Technology (Sector A)	# Channels	Watts ERP (Per Channel)	Height (feet)	Total Power Density (μW/cm²)	Frequency (MHz)	Allowable MPE (μW/cm²)	Calculated % MPE
T-Mobile 600 MHz LTE	2	591.73	112.0	3.39	600 MHz LTE	400	0.85%
T-Mobile 700 MHz LTE	2	648.82	112.0	3.72	700 MHz LTE	467	0.80%
T-Mobile 1900 MHz UMTS	2	1101.85	112.0	6.32	1900 MHz UMTS	1000	0.63%
T-Mobile 1900 MHz GSM	4	1101.85	112.0	12.63	1900 MHz GSM	1000	1.26%
T-Mobile 2100 MHz LTE	2	2589.11	112.0	14.84	2100 MHz LTE	1000	1.48%
						Total:	**5.02%**

Summary

All calculations performed for this analysis yielded results that were **within** the allowable limits for general population exposure to RF Emissions.

The anticipated maximum composite contributions from the T-Mobile facility as well as the site composite emissions value with regards to compliance with FCC's allowable limits for general population exposure to RF Emissions are shown here:

T-Mobile Sector	Power Density Value (%)
Sector A:	5.02%
Sector B:	5.02%
Sector C:	5.02%
T-Mobile Maximum MPE % (Sector A):	5.02%
Site Total:	5.43%
Site Compliance Status:	**COMPLIANT**

The anticipated composite MPE value for this site assuming all carriers present is **5.43%** of the allowable FCC established general population limit sampled at the ground level. This is based upon values listed in the Connecticut Siting Council database for existing carrier emissions.

FCC guidelines state that if a site is found to be out of compliance (over allowable thresholds), that carriers over a 5% contribution to the composite value will require measures to bring the site into compliance. For this facility, the composite values calculated were well within the allowable 100% threshold standard per the federal government.

STATE OF CONNECTICUT

DEPARTMENT OF EMERGENCY SERVICES AND PUBLIC PROTECTION

May 20, 2019

Connecticut Siting Council
10 Franklin Square
New Britain, CT 06051

Re: **Letter of Authorization** – Co-location on Connecticut State Police tower
Property address: 6 Stone Ranch Road, East Lyme, CT
Latitude: 41.3659660000 Longitude: -72.2661510000

To Whom It May Concern:

T-Mobile Northeast LLC (T-Mobile) has an Agreement with the Connecticut Department of Emergency Services and Public Protection (DESPP) to co-locate its communications equipment on the DESPP tower located at 6 Stone Ranch Road, East Lyme, CT.

T-Mobile shall be required by the terms of the agreement to seek and obtain all necessary permits and approvals. As a duly authorized representative of the DESPP, permission is hereby granted to T-Mobile and agents thereof, for the purpose of consummating any applications necessary to gain the required approvals from the State of Connecticut.

Any fees or charges associated with all applications or permits and any conditions placed on the applicant shall be the sole responsibility of T-Mobile.

Yours truly,

Brian Benito
Planning Specialist
State Of Connecticut
Department of Emergency Services and Public Protection
CTS Unit
860-685-8297
brian.benito@ct.gov