10 Industrial Avenue,
Suite 3
Mahwah, NJ 07430

Phone: 201.684.0055
Fax: 201.684.0066

July 25, 2019

Melanie A. Bachman
Acting Executive Director
Connecticut Siting Council
10 Franklin Square
New Britain, CT 06051

**Notice of Exempt Modification**
**100 Berlin Road (99 Christian Hill Rd), Cromwell CT**
**Latitude 41.60569444**
**Longitude -72.70136944**
**T-Mobile site: CTHA240A /L600**

Dear Ms. Bachman:

T-Mobile currently maintains (6) antennas at the 108 foot level of the existing 111-foot self-supported tower located at 100 Berlin Road in Cromwell CT. The self-support tower is owned by American Tower and the property is owned by 100 Berlin Land LLC. T-Mobile now intends to replace (6) of its existing antennas with (6) 600/700 MHz antennas. The new antennas would be installed at the 108-foot level of the tower and mount modifications are proposed per the attached mount analysis.

**Planned Modifications:**

**Remove:**
**Coax:**
(12) 1-5/8" coax

**Remove and Replace:**
**Antennas/RRUs:**
(3) Ericsson AIR 21 B4A/12-B5P 2.4M (REMOVE) – (3) RFS APXVAARR24_43-U-NA20 (REPLACE) 600 MHz / 700 MHz
(3) Ericsson AIR 21 B4A B2P (REMOVE) – Add (3) Ericsson AIR32 B66Aa/B2a (REPLACE)
(3) Ericsson RRUS 11 B12 (REMOVE) – Add (3) Ericsson Radio 4449 B12, B71 (REPLACE)
(3) Ericsson KRY 112 71 (REMOVE) – Add (3) Ericsson KRY 112 144/1 (REPLACE)

**Existing to Remain:**
**Antennas/TMAs/RRUs/coax:**
(6) 1-5/8" coax
(1) 1-5/8" Hybrid
(1) NAiS VIC-100

**Install New:**
**Coax Cables:**
(2) 1-5/8" Hybrid

This facility was approved by Petition No. 750 by the Siting Council January 25, 2006, with no record of conditions that would restrict exempt modifications. Therefore, this modification complies with the aforementioned approval. A copy of the decision is attached.

Please accept this letter as notification pursuant to Regulations of Connecticut State Agencies§ 16- SOj-73, for construction that constitutes an exempt modification pursuant to R.C.S.A. § 16-50j-72(b)(2). In accordance with R.C.SA. § 16-SOj-73, a copy of this letter is being sent to The Honorable Enzo Faienza, Mayor, and Stuart B. Popper, Director of Planning and Development.

The planned modifications to the facility fall squarely within those activities explicitly provided for in R.C.S;A. § 16-50j-72(b)(2).

1. The proposed modifications will not result in an increase in the height of the existing structure.

2. The proposed modifications will not require the extension of the site boundary.

3. The proposed modifications will not increase noise levels at the facility by six decibels or more, or to levels that exceed state and local criteria.

4. The operation of the replacement antennas will not increase radio frequency emissions at the facility to a level at or above the Federal Communications Commission safety standard.

5. The proposed modifications will not cause a change or alteration in the physical or environmental characteristics of the site.

6. The existing structure and its foundation can support the proposed loading.

For the foregoing reasons, T-Mobile respectfully submits that the proposed modifications to the above referenced telecommunications facility constitute an exempt modification under R.C.S.A. § 16-50j-72(b)(2).

Sincerely,

*Elizabeth Jamieson*

Elizabeth Jamieson
Transcend Wireless
10 Industrial Ave., Suite 3
Mahwah, New Jersey 07430
860-605-7808
EJamieson@TranscendWireless.com

cc:
The Honorable Enzo Faienza, Mayor
Stuart B. Popper, Director of Planning and Development
American Tower, Tower Owner
100 Berlin Land LLC, Property Owner

# Exhibit A

## Original Facility Approval

**Petition No. 750**
**Omnipoint Communications, Inc., a/k/a T-Mobile (T-Mobile)**
**Cromwell, Connecticut**
**Staff Report**
**January 25, 2006**

On December 13, 2005, Connecticut Siting Council (Council) member Philip T. Ashton and Christina Lepage of Council staff met at the proposed site located at 100 Berlin Road in Cromwell to review this petition. T-Mobile proposes to construct a 111-foot pole. T-mobile is petitioning the Council for a declaratory ruling that no Certificate of Environmental Compatibility and Public Need (Certificate) is required for this facility.

An existing structure is located at the proposed site. This structure was built upon an abandoned billboard. The existing structure includes an 86-foot tower with multiple antennas that bring the total height to approximately 100 feet above ground level (agl). T-Mobile proposes to build a 111-foot pole that would be centered within and attached to the existing structure for support. The top of the antennas would be flush with the top of the proposed pole.

The current structure is made up of four I-beams with associated bracing. Two of the I-beams with x-bracing can be removed during the installation of the proposed pole provided that additional bracing be installed on the remaining two I-beams.

The associated equipment would be located on a ten-foot by five-foot concrete slab would be located to the south of the proposed pole. The existing 15-foot by 15-foot leased area is currently enclosed by chain link and barbed wire fence. The existing leased area would have to be expanded to fully enclose the proposed equipment.

The existing structure is located on a parcel that is zoned general business (BUS) and currently is the location of the Crowne Plaza Hotel (Cromwell). The property to the south and southeast of the parcel are also zoned BUS. The property to the east and north of the parcel are zoned residential.

T-Mobile has proposed this project to fill an existing gap in coverage along the Interstate 91 (I-91) corridor and its interchange with Route 372 in Cromwell.

The proposed cumulative radio frequency electromagnetic radiation is below the ANSI/IEEE standard.

Content Last Modified on 1/26/2006 9:40:18 AM

# Exhibit B

**Property card**

**TOWN OF CROMWELL**

***Printed By:*** LISA 07/18/2019 9:10:10AM

***Parcel ID:*** **00459110** ***Location:*** 100 BERLIN ROAD ***Map-Lot*** 07-21 ***Last Revaluation - October 1, 2017***

***Patriot*** **Properties Inc.**

| ***Current Owner*** | ***Percent*** |
|---|---|
| 100 BERLIN LAND LLC | 100 |

12 TIDEWATER DRIVE
ORMOND BEACH FL 32174

## Current Value Information

Mkt Adj Cost

| Use Code | Land Value | PA 490 Value | Building Value | Outbuildings | Total Value | Total Assessed |
|---|---|---|---|---|---|---|
| 200 | 1,000,000 | 0 | 0 | 276,000 | 1,276,000 | 893,200 |
| **TOTAL** | **1,000,000** | **0** | **0** | **276,000** | **1,276,000** | **893,200** |

***Previous Owner(s)***
100 BERLIN HOLDINGS LLC

## Previous Value Information

| Tax Yr | Land Value | Bldg Value | Outbuildings | Total Value | Total Assessment |
|---|---|---|---|---|---|
| 2019 | 1,000,000 | 0 | 276,000 | 1,276,000 | 893,200 |
| 2018 | 1,000,000 | 0 | 276,000 | 1,276,000 | 893,200 |
| 2017 | 1,000,000 | 0 | 276,000 | 1,276,000 | 893,200 |
| 2016 | 0 | 0 | 480,000 | 480,000 | 336,000 |
| 2015 | 0 | 0 | 480,000 | 480,000 | 336,000 |
| 2014 | 0 | 0 | 480,000 | 480,000 | 336,000 |

## Property Factors

Census
Flood:
Topo:
Street:
Dev. Map
Dev. Map

## Zoning Data

**Desc.** **%**

## Utilities

## BAA

## General Notes

## Sales Information

| Grantee | Vol-Page | Type | SaleDate | SalePrice | Sale Verif | GeneralNotes |
|---|---|---|---|---|---|---|
| 100 BERLIN LAND LLC | 1598-217 | W | 07/28/2017 | 6,720,000 | Family Members | |
| 100 BERLIN HOLDINGS LLC | 1520-134 | | 04/07/2015 | 7,500,000 | Other | |
| SHANER SPE ASSOCIATES | 1114-112 | | 09/26/2005 | 0 | Other | |

## Activity Information

| Date | Results | Visited By |
|---|---|---|
| 09/04/2017 | Change - Value Change Company | John Valente |
| 05/18/2017 | No Change - Field Review | Dave Stannard |
| 08/25/2016 | Permit- Miscellaneous | Assessor Office |
| 09/12/2012 | Permit- Miscellaneous | Assessor Office |
| 04/29/2010 | Permit- Miscellaneous | Assessor Office |

## Building Permit Information

| Date | Permit # | Description | Amount | % Comp | Visit Date | CO Date | GeneralNotes |
|---|---|---|---|---|---|---|---|
| 05/29/2019 | 26098 | Electric | 2,500 | 0 | | | FIRE ALARM/HOODS |
| 12/14/2017 | 25191 | Other | 25,000 | 100 | | | 3-Antenna |
| 11/14/2017 | 25138 | Electric | 1,850 | 100 | | | Meter |
| 08/25/2016 | 24257 | Electric | 25,000 | 100 | 25-Aug-2016 | | 3 Antennas |
| 09/12/2012 | 21107 | Other | 25,000 | 100 | 12-Sep-2012 | | LTE antennas & support eq |
| 03/08/2010 | 18916 | Other | 12,000 | 100 | 29-Apr-2010 | 29-Apr-2010 | |

## Land Data

| Use | Description | Units | Unit Type | Neigh | | | | Special Land Calc | Appraised Value | PA 490 Asmt | Neigh Order | Notes |
|---|---|---|---|---|---|---|---|---|---|---|---|---|
| | | | | | % | % | % | | | | | |

**Total Area:** **PA 490 Use Asmt:** **Total Appraised:** **Assessed Value:**

Disclaimer: This Information is believed to be correct but is subject to change and is not warranteed.

**ParcelID: 00459110** **Location:** 100 BERLIN ROAD **Printed By:** LISA 07/18/2019 9:10:10AM

**Bldg Seq** 1 **Of** 1

## Exterior Information

Building Type:
Story Ht:
Living Units: 0
Foundation:
Prim. Ext. Wall:
Sec. Ext. Wall:
Roof Type:
Roof Cover:
Avg. Wall Ht:
Color:

## Condo Information

Name:
Style:
Location:
Tot Units:

## General Information

Year Blt:
Grade:
Remodeled Yr:
Rem. Kitchen Yr:
Rem. Bath Yr:

## Interior Information

Prime Wall:
Sec. Wall:
Floor Type:
Sec. Floor:
Heat Fuel:
Heat Type:
Sec. Ht Type:
% A/C: 0
% Sprinkled: 0
Bsmt. Gar: 0
Kitchens: 0 Add. Kit: 0
Fireplaces: 0 Gas: 0
Int. Condition: Typical

## Depreciation %

| | | |
|---|---|---|
| Phys Cond | Average | 0.00 |
| Func | | |
| Econ | | |
| Spec | | |
| OV | | |

**Total %Dep: 0.00**

## Calculation

| | |
|---|---|
| Basic $/SQ | 0.00 |
| Replacement Cost | 0 |
| Depreciation | 0 |
| Depreciated Value | 0 |
| Final Total (Rounded) | **0** |

## Room Count

Total Rooms:
Bedrooms:

## Bath Features

| | |
|---|---|
| Full Baths: | 0 |
| Addl. Full Baths: | 0 |
| Half Baths: | 0 |
| Addl. Half Baths: | 0 |
| Full Bths Below: | 0 |
| Half Bths Below: | 0 |
| Other Fixtures: | 0 |
| Total Baths: | 0.0 |

## Extra Features / Yard Items (1st 10 Lines Displayed)

| Code | Description | Qty | Size | Cond. | Year | Unit Price | Dep% | UndepValue | Appraised Value | Assessment |
|---|---|---|---|---|---|---|---|---|---|---|
| CELL | Cell Site Ca | 1 | 1 | AV | 2007 | 300,000.00 | 8 | 300,000 | 276,000 | 193,200 |

**Total Sp. Features:** **Total Yard Items:** **276,000** **Total Appraised:** **276,000** **Total Assessed Value:** **193,200**

## Sub Area Detail

| Code | Desc. | Living | Gross Area |
|---|---|---|---|

Disclaimer: This Information is believed to be correct but is subject to change and is not warranteed.

Town of Cromwell, CT

# Property

100 Berlin Road

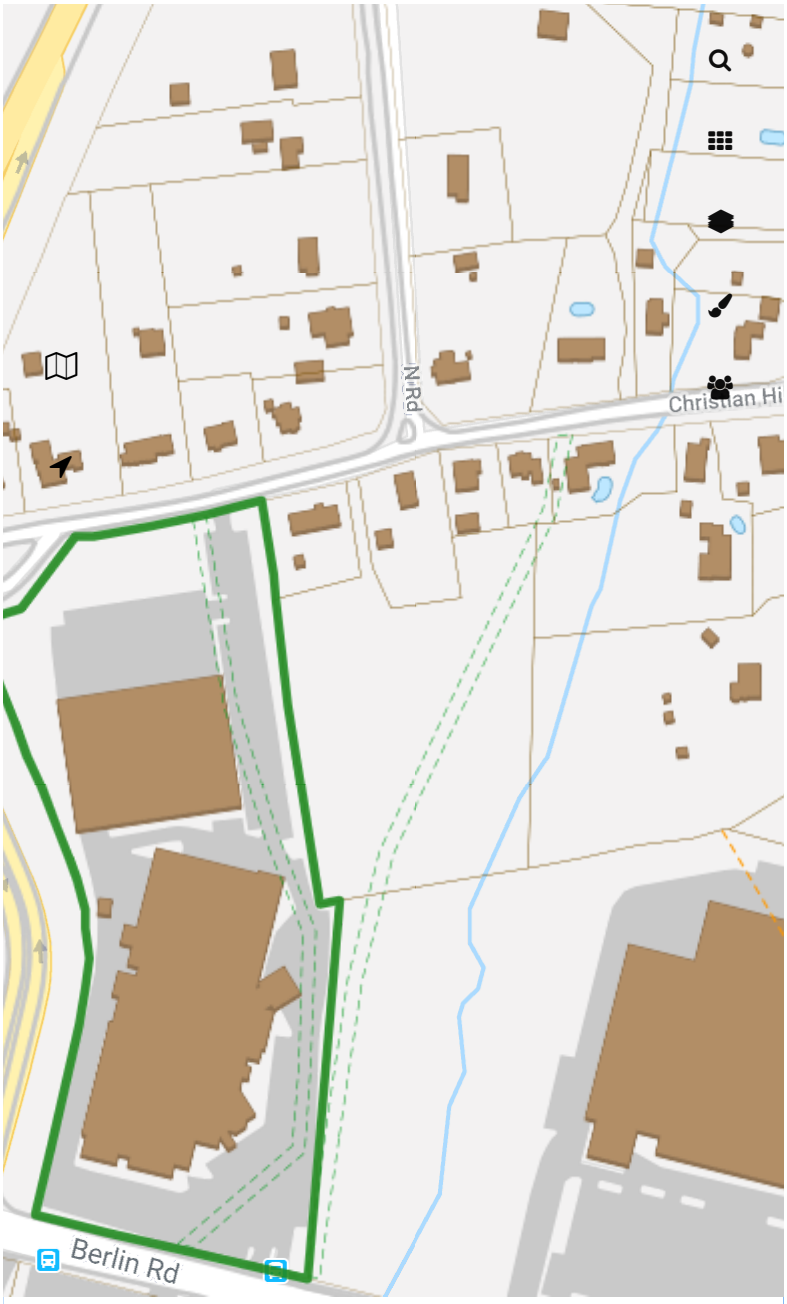


## Search

Advanced Search

Clear Results

Zoom To Results

Download Results | All Results

Showing 1-1 results. Scroll to see more.

### 100 BERLIN ROAD

100 BERLIN LAND LLC

00459100

(https://www.google.com/maps/@41.606245,-72.693849,17z?hl=en-US) (http://www.mapgeo.io)

# Exhibit C

## Construction Drawings

VICINITY MAP

AMERICAN TOWER®

ATC SITE NAME: CROMWELLSW CT
ATC SITE NUMBER: 411261
T-MOBILE SITE ID: CTHA240A
SITE ADDRESS: 99 CHRISTIAN HILL ROAD
CROMWELL, CT 06416

LOCATION MAP

# T-MOBILE L600 ANTENNA AMEMDMENT
# 67D92DB CONFIGURATION

## COMPLIANCE CODE

ALL WORK SHALL BE PERFORMED AND MATERIALS INSTALLED IN ACCORDANCE WITH THE CURRENT EDITIONS OF THE FOLLOWING CODES AS ADOPTED BY THE LOCAL GOVERNMENT AUTHORITIES. NOTHING IN THESE PLANS IS TO BE CONSTRUED TO PERMIT WORK NOT CONFORMING TO THESE CODES.

1. INTERNATIONAL BUILDING CODE (IBC)
2. NATIONAL ELECTRIC CODE (NEC)
3. LOCAL BUILDING CODE
4. CITY/COUNTY ORDINANCES

## UTILITY COMPANIES

POWER COMPANY: NORTHEAST
PHONE: (800) 286-2000

TELEPHONE COMPANY: N/A
PHONE: N/A

811
Know what's below.
Call before you dig.

## PROJECT SUMMARY

SITE ADDRESS:

99 CHRISTIAN HILL ROAD
CROMWELL, CT 06416
COUNTY: MIDDLESEX

1A CERTIFICATE SUMMARY:

LATITUDE: 41° 36' 20.59" N
LONGITUDE: 72° 42' 05.00" W
GROUND ELEVATION: 78.5' AMSL
TOWER HEIGHT: 111' AGL
HIGHEST APPURTENANCE: 111' AGL

## PROJECT TEAM

TOWER OWNER:

AMERICAN TOWER
10 PRESIDENTIAL WAY
WOBURN, MA 01801

ENGINEER:

ATC TOWER SERVICES, LLC
3500 REGENCY PKWY STE 100
CARY, NC 27518

PROPERTY OWNER:

100 BERLIN LAND LLC
12 TIDEWATER DRIVE
ORMOND BEACH, FL 32174

APPLICANT:

T-MOBILE

## PROJECT DESCRIPTION

THE PROPOSED PROJECT INCLUDES MODIFYING GROUND BASED AND TOWER MOUNTED EQUIPMENT AS INDICATED PER BELOW:

REMOVE (6) PANELS, (3) TTAs, (3) RRUs AND (12) 1-5/8" COAX CABLES

INSTALL (6) NEW PANELS, (3) TTAs, (3) RRUs, AND (2) 1-5/8" HYBRID CABLES

EXISTING (6) 1-5/8" COAX CABLES AND (1) 1-5/8" HYBRID CABLE TO REMAIN

## PROJECT NOTES

1. THE FACILITY IS UNMANNED.
2. A TECHNICIAN WILL VISIT THE SITE APPROXIMATELY ONCE A MONTH FOR ROUTINE INSPECTION AND MAINTENANCE.
3. THE PROJECT WILL NOT RESULT IN ANY SIGNIFICANT LAND DISTURBANCE OR EFFECT OF STORM WATER DRAINAGE.
4. NO SANITARY SEWER, POTABLE WATER OR TRASH DISPOSAL IS REQUIRED.
5. HANDICAP ACCESS IS NOT REQUIRED.

## PROJECT LOCATION DIRECTIONS

TAKE I-91 NORTH TOWARDS HARTFORD. TAKE EXIT 21. TAKE A LEFT AT THE END OF EXIT. ( RT. 372) TAKE A LEFT ONTO COLES RD. TAKE YOUR FIRST LEFT ONTO CHRISTIAN HILL RD. FOLLOW TO THE TOP OF THIS DEAD END ROAD. SITE TO THE LEFT UNDER THE SIGN POST. GATE COMBO IS 4667.

## SHEET INDEX

| SHEET NO: | DESCRIPTION: | REV: | DATE: | BY: |
|---|---|---|---|---|
| G-001 | TITLE SHEET | 0 | 07/19/19 | CA |
| G-002 | GENERAL NOTES | 0 | 07/19/19 | CA |
| C-101 | DETAILED SITE PLAN & TOWER ELEVATION | 0 | 07/19/19 | CA |
| C-501 | ANTENNA INFORMATION & SCHEDULE | 0 | 07/19/19 | CA |
| E-501 | GROUNDING DETAILS | 0 | 07/19/19 | CA |
| R-601 | SUPPLEMENTAL | | | |
| R-602 | SUPPLEMENTAL | | | |
| R-603 | SUPPLEMENTAL | | | |
| R-604 | SUPPLEMENTAL | | | |

AMERICAN TOWER®
A.T. ENGINEERING SERVICE, PLLC
3500 REGENCY PARKWAY
SUITE 100
CARY, NC 27518
PHONE: (919) 468-0112
COA: PEC.0001553

THESE DRAWINGS AND/OR THE ACCOMPANYING SPECIFICATION AS INSTRUMENTS OR SERVICE ARE THE EXCLUSIVE PROPERTY OF AMERICAN TOWER. THEIR USE AND PUBLICATION SHALL BE RESTRICTED TO THE ORIGINAL SITE FOR WHICH THEY ARE PREPARED. ANY USE OR DISCLOSURE OTHER THAN THAT WHICH RELATES TO AMERICAN TOWER OR THE SPECIFIED CARRIER IS STRICTLY PROHIBITED. TITLE TO THESE DOCUMENTS SHALL REMAIN THE PROPERTY OF AMERICAN TOWER WHETHER OR NOT THE PROJECT IS EXECUTED. NEITHER THE ARCHITECT NOR THE ENGINEER WILL BE PROVIDING ON-SITE CONSTRUCTION REVIEW OF THIS PROJECT. CONTRACTOR(S) MUST VERIFY ALL DIMENSIONS AND ADVISE AMERICAN TOWER OF ANY DISCREPANCIES. ANY PRIOR ISSUANCE OF THIS DRAWING IS SUPERSEDED BY THE LATEST VERSION ON FILE WITH AMERICAN TOWER.

| REV. | DESCRIPTION | BY | DATE |
|---|---|---|---|
| 0 | FOR CONSTRUCTION | CA | 07/19/19 |

ATC SITE NUMBER:
411261

ATC SITE NAME:
CROMWELLSW CT

SITE ADDRESS:
99 CHRISTIAN HILL ROAD
CROMWELL, CT 06416

SEAL:

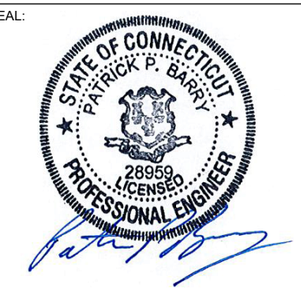


Authorized by "EOR"
Jul 19 2019 5:42 PM

T-Mobile design

| | |
|---|---|
| DRAWN BY: | CA |
| APPROVED BY: | PPB |
| DATE DRAWN: | 04/24/19 |
| ATC JOB NO: | 12951823 |

TITLE SHEET

| SHEET NUMBER: | REVISION: |
|---|---|
| C-501 | 0 |

Copyright © 2019 ATC IP LLC. All Rights Reserved.

## GENERAL CONSTRUCTION NOTES:

1. ALL WORK SHALL CONFORM TO ALL CURRENT APPLICABLE FEDERAL, STATE, AND LOCAL CODES, INCLUDING ANSI/EIA/TIA-222, AND COMPLY WITH ATC MASTER SPECIFICATIONS.
2. CONTRACTOR SHALL CONTACT LOCAL 811 FOR IDENTIFICATION OF UNDERGROUND UTILITIES PRIOR TO START OF CONSTRUCTION.
3. CONTRACTOR SHALL BE RESPONSIBLE FOR COORDINATING ALL REQUIRED INSPECTIONS.
4. ALL DIMENSIONS TO, OF, AND ON EXISTING BUILDINGS, DRAINAGE STRUCTURES, AND SITE IMPROVEMENTS SHALL BE VERIFIED IN FIELD BY CONTRACTOR WITH ALL DISCREPANCIES REPORTED TO THE ENGINEER.
5. DO NOT CHANGE SIZE OR SPACING OF STRUCTURAL ELEMENTS.
6. DETAILS SHOWN ARE TYPICAL; SIMILAR DETAILS APPLY TO SIMILAR CONDITIONS UNLESS OTHERWISE NOTED.
7. THESE DRAWINGS DO NOT INCLUDE NECESSARY COMPONENTS FOR CONSTRUCTION SAFETY WHICH SHALL BE THE SOLE RESPONSIBILITY OF THE CONTRACTOR.
8. CONTRACTOR SHALL BRACE STRUCTURES UNTIL ALL STRUCTURAL ELEMENTS NEEDED FOR STABILITY ARE INSTALLED. THESE ELEMENTS ARE AS FOLLOWS: LATERAL BRACING, ANCHOR BOLTS, ETC.
9. CONTRACTOR SHALL DETERMINE EXACT LOCATION OF EXISTING UTILITIES, GROUNDS DRAINS, DRAIN PIPES, VENTS, ETC. BEFORE COMMENCING WORK.
10. INCORRECTLY FABRICATED, DAMAGED, OR OTHERWISE MISFITTING OR NONCONFORMING MATERIALS OR CONDITIONS SHALL BE REPORTED TO THE T-MOBILE WIRELESS REP PRIOR TO REMEDIAL OR CORRECTIVE ACTION. ANY SUCH REMEDIAL ACTION SHALL REQUIRE WRITTEN APPROVAL BY THE T-MOBILE WIRELESS REP PRIOR TO PROCEEDING.
11. EACH CONTRACTOR SHALL COOPERATE WITH THE T-MOBILE WIRELESS REP, AND COORDINATE HIS WORK WITH THE WORK OF OTHERS.
12. CONTRACTOR SHALL REPAIR ANY DAMAGE CAUSED BY CONSTRUCTION OF THIS PROJECT TO MATCH EXISTING PRE-CONSTRUCTION CONDITIONS TO THE SATISFACTION OF THE T-MOBILE WIRELESS CONSTRUCTION MANAGER.
13. ALL CABLE/CONDUIT ENTRY/EXIT PORTS SHALL BE WEATHERPROOFED DURING INSTALLATION USING A SILICONE SEALANT.
14. WHERE EXISTING CONDITIONS DO NOT MATCH THOSE SHOWN IN THIS PLAN SET, CONTRACTOR SHALL NOTIFY THE T-MOBILE WIRELESS REP IMMEDIATELY.
15. CONTRACTOR SHALL ENSURE ALL SUBCONTRACTORS ARE PROVIDED WITH A COMPLETE AND CURRENT SET OF DRAWINGS AND SPECIFICATIONS FOR THIS PROJECT.
16. CONTRACTOR SHALL REMOVE ALL RUBBISH AND DEBRIS FROM THE SITE AT THE END OF EACH DAY.
17. CONTRACTOR SHALL COORDINATE WORK SCHEDULE WITH LANDLORD AND TAKE PRECAUTIONS TO MINIMIZE IMPACT AND DISRUPTION OF OTHER OCCUPANTS OF THE FACILITY.
18. CONTRACTOR SHALL FURNISH T-MOBILE WIRELESS WITH A PDF MARKED UP AS-BUILT SET OF DRAWINGS UPON COMPLETION OF WORK.
19. PRIOR TO SUBMISSION OF BID, CONTRACTOR SHALL COORDINATE WITH T-MOBILE WIRELESS REP TO DETERMINE WHAT, IF ANY, ITEMS WILL BE PROVIDED. ALL ITEMS NOT PROVIDED SHALL BE PROVIDED AND INSTALLED BY THE CONTRACTOR. CONTRACTOR WILL INSTALL ALL ITEMS PROVIDED.
20. PRIOR TO SUBMISSION OF BID, CONTRACTOR SHALL COORDINATE WITH T-MOBILE WIRELESS REP TO DETERMINE IF ANY PERMITS WILL BE OBTAINED BY CONTRACTOR. ALL REQUIRED PERMITS NOT OBTAINED BY T-MOBILE WIRELESS MUST BE OBTAINED, AND PAID FOR, BY THE CONTRACTOR.
21. CONTRACTOR SHALL INSTALL ALL SITE SIGNAGE IN ACCORDANCE WITH T-MOBILE WIRELESS SPECIFICATIONS AND REQUIREMENTS.
22. CONTRACTOR SHALL SUBMIT ALL SHOP DRAWINGS TO T-MOBILE WIRELESS FOR REVIEW AND APPROVAL PRIOR TO FABRICATION.
23. ALL EQUIPMENT SHALL BE INSTALLED ACCORDING TO MANUFACTURER'S SPECIFICATIONS AND LOCATED ACCORDING TO T-MOBILE WIRELESS SPECIFICATIONS, AND AS SHOWN IN THESE PLANS.
24. THE CONTRACTOR SHALL SUPERVISE AND DIRECT THE PROJECT DESCRIBED HEREIN. THE CONTRACTOR SHALL BE SOLELY RESPONSIBLE FOR ALL THE CONSTRUCTION MEANS, METHODS, TECHNIQUES, SEQUENCES AND PROCEDURES AND FOR COORDINATING ALL PORTIONS OF THE WORK UNDER THE CONTRACT.
25. CONTRACTOR SHALL NOTIFY T-MOBILE WIRELESS REP A MINIMUM OF 48 HOURS IN ADVANCE OF POURING CONCRETE OR BACKFILLING ANY UNDERGROUND UTILITIES, FOUNDATIONS OR SEALING ANY WALL, FLOOR OR ROOF PENETRATIONS FOR ENGINEERING REVIEW AND APPROVAL.
26. CONTRACTOR SHALL BE RESPONSIBLE FOR SITE SAFETY INCLUDING COMPLIANCE WITH ALL APPLICABLE OSHA STANDARDS AND RECOMMENDATIONS AND SHALL PROVIDE ALL NECESSARY SAFETY DEVICES INCLUDING PPE AND PPM AND CONSTRUCTION DEVICES SUCH AS WELDING AND FIRE PREVENTION, TEMPORARY SHORING, SCAFFOLDING, TRENCH BOXES/SLOPING, BARRIERS, ETC.
27. THE CONTRACTOR SHALL PROTECT AT HIS OWN EXPENSE, ALL EXISTING FACILITIES AND SUCH OF HIS NEW WORK LIABLE TO INJURY DURING THE CONSTRUCTION PERIOD. ANY DAMAGE CAUSED BY NEGLECT ON THE PART OF THIS CONTRACTOR OR HIS REPRESENTATIVES, OR BY THE ELEMENTS DUE TO NEGLECT ON THE PART OF THIS CONTRACTOR OR HIS REPRESENTATIVES, EITHER TO THE EXISTING WORK, OR TO HIS WORK OR THE WORK OF ANY OTHER CONTRACTOR, SHALL BE REPAIRED AT HIS EXPENSE TO THE OWNER'S SATISFACTION.
28. ALL WORK SHALL BE INSTALLED IN A FIRST CLASS, NEAT AND WORKMANLIKE MANNER BY MECHANICS SKILLED IN THE TRADE INVOLVED. THE QUALITY OF WORKMANSHIP SHALL BE SUBJECT TO THE APPROVAL OF THE T-MOBILE WIRELESS REP. ANY WORK FOUND BY THE T-MOBILE WIRELESS REP TO BE OF INFERIOR QUALITY AND/OR WORKMANSHIP SHALL BE REPLACED AND/OR REWORKED AT CONTRACTOR EXPENSE UNTIL APPROVAL IS OBTAINED.
29. IN ORDER TO ESTABLISH STANDARDS OF QUALITY AND PERFORMANCE, ALL TYPES OF MATERIALS LISTED HEREINAFTER BY MANUFACTURER'S NAMES AND/OR MANUFACTURER'S CATALOG NUMBER SHALL BE PROVIDED BY THESE MANUFACTURERS AS SPECIFIED.

## STRUCTURAL STEEL NOTES:

1. STRUCTURAL STEEL SHALL CONFORM TO THE LATEST EDITION OF THE AISC "SPECIFICATION FOR THE DESIGN, FABRICATION AND ERECTION OF STRUCTURAL STEEL FOR BUILDINGS."
2. STRUCTURAL STEEL ROLLED SHAPES, PLATES AND BARS SHALL CONFORM TO THE FOLLOWING ASTM DESIGNATIONS:
   - A. ASTM A-572, GRADE 50 - ALL W SHAPES, UNLESS NOTED OR A992 OTHERWISE
   - B. ASTM A-36 - ALL OTHER ROLLED SHAPES, PLATES AND BARS UNLESS NOTED OTHERWISE.
   - C. ASTM A-500, GRADE B - HSS SECTION (SQUARE, RECTANGULAR, AND ROUND)
   - D. ASTM A-325, TYPE SC OR N - ALL BOLTS FOR CONNECTING STRUCTURAL MEMBERS
   - E. ASTM F-1554 07 - ALL ANCHOR BOLTS, UNLESS NOTED OTHERWISE
3. ALL EXPOSED STRUCTURAL STEEL MEMBERS SHALL BE HOT-DIPPED GALVANIZED AFTER FABRICATION PER ASTM A123. EXPOSED STEEL HARDWARE AND ANCHOR BOLTS SHALL BE GALVANIZED PER ASTM A153 OR B695.
4. ALL FIELD CUT SURFACES, FIELD DRILLED HOLES AND GROUND SURFACES WHERE EXISTING PAINT OR GALVANIZATION REMOVAL WAS REQUIRED SHALL BE REPAIRED WITH (2) BRUSHED COATS OF ZRC GALVILITE COLD GALVANIZING COMPOUND PER ASTM A780 AND MANUFACTURER'S RECOMMENDATIONS.
5. DO NOT DRILL HOLES THROUGH STRUCTURAL STEEL MEMBERS EXCEPT AS SHOWN AND DETAILED ON STRUCTURAL DRAWINGS.
6. CONNECTIONS:
   - A. ALL WELDING TO BE PERFORMED BY AWS CERTIFIED WELDERS AND CONDUCTED IN ACCORDANCE WITH THE LATEST EDITION OF THE AWS WELDING CODE D1.1.
   - B. ALL WELDS SHALL BE INSPECTED VISUALLY. 25% OF WELDS SHALL BE INSPECTED WITH DYE PENETRANT OR MAGNETIC PARTICLE TO MEET THE ACCEPTANCE CRITERIA OF AWS D1.1. REPAIR ALL WELDS AS NECESSARY.
   - C. INSPECTION SHALL BE PERFORMED BY AN AWS CERTIFIED WELD INSPECTOR.
   - D. IT IS THE CONTRACTORS RESPONSIBILITY TO PROVIDE BURNING/WELDING PERMITS AS REQUIRED BY LOCAL GOVERNING AUTHORITY AND IF REQUIRED SHALL HAVE FIRE DEPARTMENT DETAIL FOR ANY WELDING ACTIVITY.
   - E. ALL ELECTRODES TO BE LOW HYDROGEN, MATCHING FILLER METAL, PER AWS D1.1, UNLESS NOTED OTHERWISE.
   - F. MINIMUM WELD SIZE TO BE 0.1875 INCH FILLET WELDS, UNLESS NOTED OTHERWISE.
   - G. PRIOR TO FIELD WELDING GALVANIZING MATERIAL, CONTRACTOR SHALL GRIND OFF GALVANIZING ½" BEYOND ALL FIELD WELD SURFACES. AFTER WELD AND WELD INSPECTION IS COMPLETE, REPAIR ALL GROUND AND WELDED SURFACES WITH ZRC GALVILITE COLD GALVANIZING COMPOUND PER ASTM A780 AND MANUFACTURERS RECOMMENDATIONS.


AMERICAN TOWER®
A.T. ENGINEERING SERVICE, PLLC
3500 REGENCY PARKWAY
SUITE 100
CARY, NC 27518
PHONE: (919) 468-0112
COA: PEC.0001553



THESE DRAWINGS AND/OR THE ACCOMPANYING SPECIFICATION AS INSTRUMENTS OR SERVICE ARE THE EXCLUSIVE PROPERTY OF AMERICAN TOWER. THEIR USE AND PUBLICATION SHALL BE RESTRICTED TO THE ORIGINAL SITE FOR WHICH THEY ARE PREPARED. ANY USE OR DISCLOSURE OTHER THAN THAT WHICH RELATES TO AMERICAN TOWER OR THE SPECIFIED CARRIER IS STRICTLY PROHIBITED. TITLE TO THESE DOCUMENTS SHALL REMAIN THE PROPERTY OF AMERICAN TOWER WHETHER OR NOT THE PROJECT IS EXECUTED. NEITHER THE ARCHITECT NOR THE ENGINEER WILL BE PROVIDING ON-SITE CONSTRUCTION REVIEW OF THIS PROJECT. CONTRACTOR(S) MUST VERIFY ALL DIMENSIONS AND ADVISE AMERICAN TOWER OF ANY DISCREPANCIES. ANY PRIOR ISSUANCE OF THIS DRAWING IS SUPERSEDED BY THE LATEST VERSION ON FILE WITH AMERICAN TOWER.


| REV. | DESCRIPTION | BY | DATE |
|---|---|---|---|
| 0 | FOR CONSTRUCTION | CA | 07/19/19 |
| | | | |
| | | | |
| | | | |
| | | | |

ATC SITE NUMBER:
411261

ATC SITE NAME:
CROMWELLSW CT

SITE ADDRESS:
99 CHRISTIAN HILL ROAD
CROMWELL, CT 06416

SEAL:

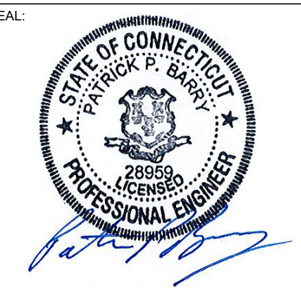


Authorized by "EOR"
Jul 19 2019 5:42 PM

T-Mobile design

| | |
|---|---|
| DRAWN BY: | CA |
| APPROVED BY: | PPB |
| DATE DRAWN: | 04/24/19 |
| ATC JOB NO: | 12951823 |

GENERAL NOTES

| SHEET NUMBER: | REVISION: |
|---|---|
| C-501 | 0 |

Copyright © 2019 ATC IP LLC. All Rights Reserved.

SITE PLAN NOTES:

1. THIS SITE PLAN REPRESENTS THE BEST PRESENT KNOWLEDGE AVAILABLE TO THE ENGINEER AT THE TIME OF THIS DESIGN. THE CONTRACTOR SHALL VISIT THE SITE PRIOR TO CONSTRUCTION AND VERIFY ALL EXISTING CONDITIONS RELATED TO THE SCOPE OF WORK FOR THIS PROJECT.

2. ICE BRIDGE, CABLE LADDER, COAX PORT, AND COAX CABLE ARE SHOWN FOR REFERENCE ONLY. CONTRACTOR SHALL CONFIRM THE EXACT LOCATION OF ALL PROPOSED AND EXISTING EQUIPMENT AND STRUCTURES DEPICTED ON THIS PLAN. BEFORE UTILIZING EXISTING CABLE SUPPORTS, COAX PORTS, INSTALLING NEW PORTS OR ANY OTHER EQUIPMENT, CONTRACTOR SHALL VERIFY ALL ASPECTS OF THE COMPONENTS MEET THE ATC SPECIFICATIONS.

3. IT IS THE RESPONSIBILITY OF THE CONTRACTOR TO COORDINATE WITH THE T-MOBILE REPRESENTATIVE AND LOCAL UTILITY COMPANY FOR THE INSTALLATION OF CONDUITS, CONDUCTORS, BREAKERS, DISCONNECTS, OR ANY OTHER EQUIPMENT REQUIRED FOR ELECTRICAL SERVICE. ALL ELECTRICAL WORK SHALL BE PERFORMED IN ACCORDANCE WITH LATEST EDITION OF THE STATE AND NATIONAL CODES, ORDINANCES AND REGULATIONS APPLICABLE TO THIS PROJECT.

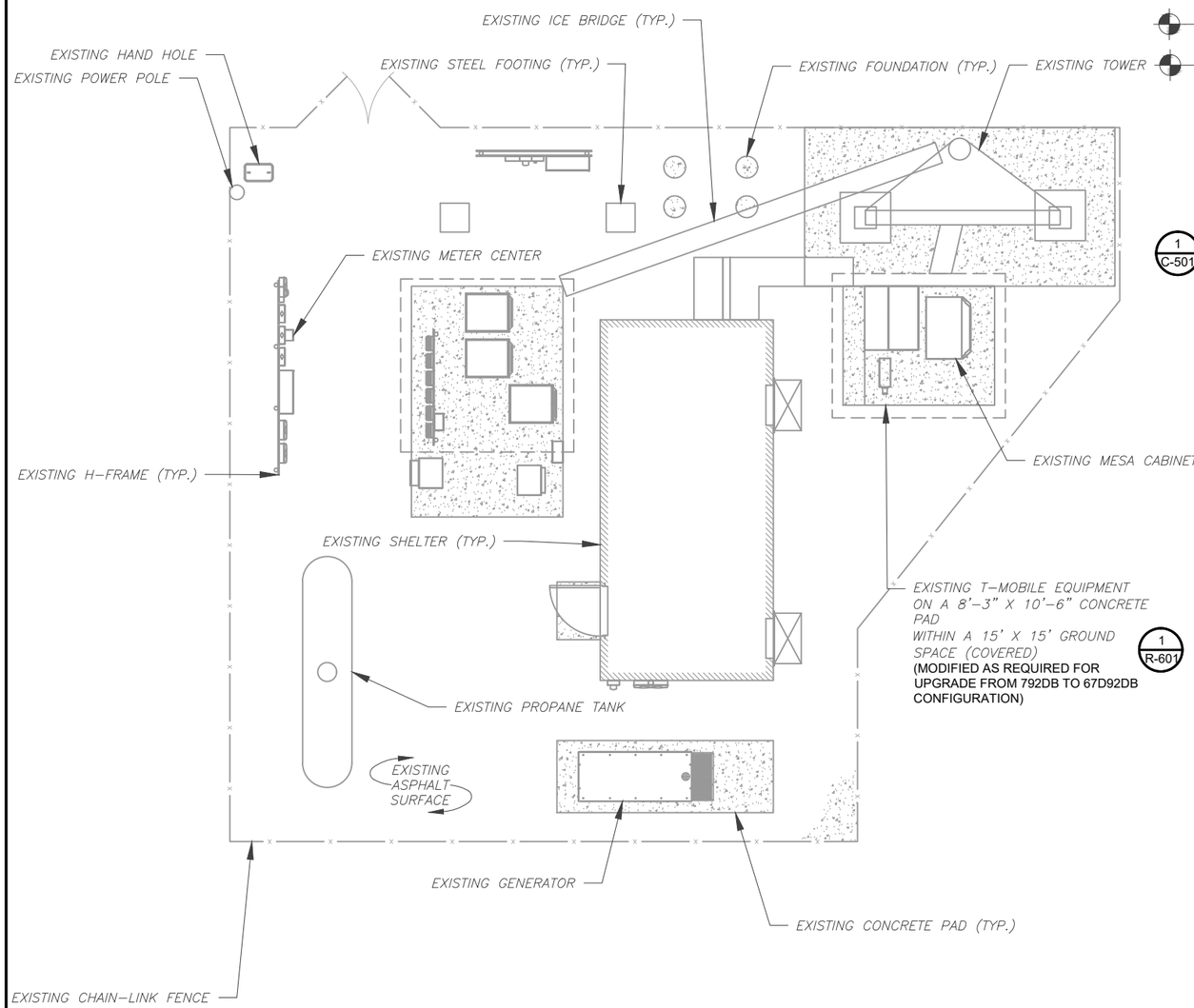


1 DETAILED SITE PLAN

0 10' 20'

SCALE: 1"=10' (11X17)
1"=5' (22X34)

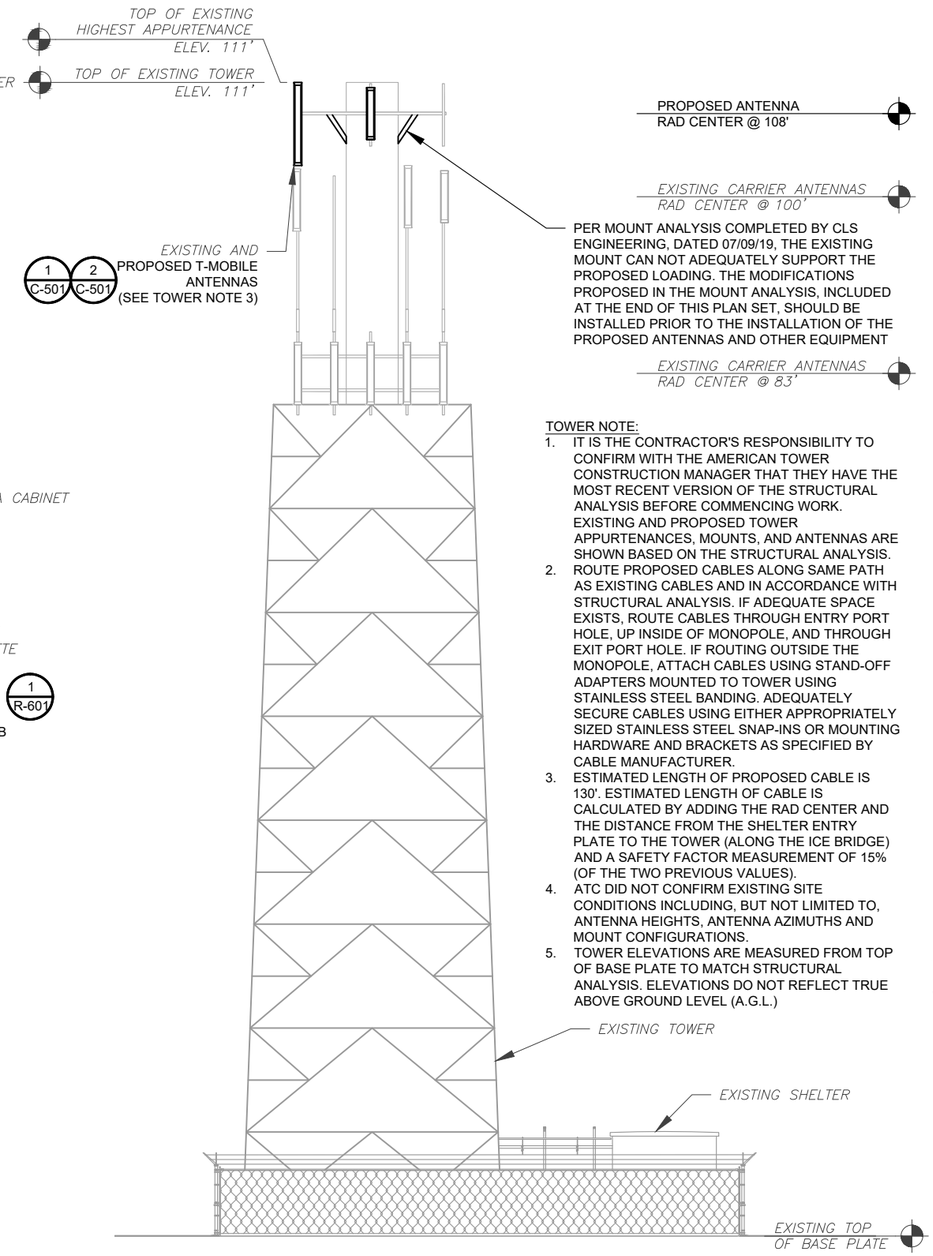


PER MOUNT ANALYSIS COMPLETED BY CLS ENGINEERING, DATED 07/09/19, THE EXISTING MOUNT CAN NOT ADEQUATELY SUPPORT THE PROPOSED LOADING. THE MODIFICATIONS PROPOSED IN THE MOUNT ANALYSIS, INCLUDED AT THE END OF THIS PLAN SET, SHOULD BE INSTALLED PRIOR TO THE INSTALLATION OF THE PROPOSED ANTENNAS AND OTHER EQUIPMENT

TOWER NOTE:

1. IT IS THE CONTRACTOR'S RESPONSIBILITY TO CONFIRM WITH THE AMERICAN TOWER CONSTRUCTION MANAGER THAT THEY HAVE THE MOST RECENT VERSION OF THE STRUCTURAL ANALYSIS BEFORE COMMENCING WORK. EXISTING AND PROPOSED TOWER APPURTENANCES, MOUNTS, AND ANTENNAS ARE SHOWN BASED ON THE STRUCTURAL ANALYSIS.
2. ROUTE PROPOSED CABLES ALONG SAME PATH AS EXISTING CABLES AND IN ACCORDANCE WITH STRUCTURAL ANALYSIS. IF ADEQUATE SPACE EXISTS, ROUTE CABLES THROUGH ENTRY PORT HOLE, UP INSIDE OF MONOPOLE, AND THROUGH EXIT PORT HOLE. IF ROUTING OUTSIDE THE MONOPOLE, ATTACH CABLES USING STAND-OFF ADAPTERS MOUNTED TO TOWER USING STAINLESS STEEL BANDING. ADEQUATELY SECURE CABLES USING EITHER APPROPRIATELY SIZED STAINLESS STEEL SNAP-INS OR MOUNTING HARDWARE AND BRACKETS AS SPECIFIED BY CABLE MANUFACTURER.
3. ESTIMATED LENGTH OF PROPOSED CABLE IS 130'. ESTIMATED LENGTH OF CABLE IS CALCULATED BY ADDING THE RAD CENTER AND THE DISTANCE FROM THE SHELTER ENTRY PLATE TO THE TOWER (ALONG THE ICE BRIDGE) AND A SAFETY FACTOR MEASUREMENT OF 15% (OF THE TWO PREVIOUS VALUES).
4. ATC DID NOT CONFIRM EXISTING SITE CONDITIONS INCLUDING, BUT NOT LIMITED TO, ANTENNA HEIGHTS, ANTENNA AZIMUTHS AND MOUNT CONFIGURATIONS.
5. TOWER ELEVATIONS ARE MEASURED FROM TOP OF BASE PLATE TO MATCH STRUCTURAL ANALYSIS. ELEVATIONS DO NOT REFLECT TRUE ABOVE GROUND LEVEL (A.G.L.)

2 TOWER ELEVATION

SCALE: NOT TO SCALE


AMERICAN TOWER®
A.T. ENGINEERING SERVICE, PLLC
3500 REGENCY PARKWAY
SUITE 100
CARY, NC 27518
PHONE: (919) 468-0112
COA: PEC.0001553



THESE DRAWINGS AND/OR THE ACCOMPANYING SPECIFICATION AS INSTRUMENTS OR SERVICE ARE THE EXCLUSIVE PROPERTY OF AMERICAN TOWER. THEIR USE AND PUBLICATION SHALL BE RESTRICTED TO THE ORIGINAL SITE FOR WHICH THEY ARE PREPARED. ANY USE OR DISCLOSURE OTHER THAN THAT WHICH RELATES TO AMERICAN TOWER OR THE SPECIFIED CARRIER IS STRICTLY PROHIBITED. TITLE TO THESE DOCUMENTS SHALL REMAIN THE PROPERTY OF AMERICAN TOWER WHETHER OR NOT THE PROJECT IS EXECUTED. NEITHER THE ARCHITECT NOR THE ENGINEER WILL BE PROVIDING ON-SITE CONSTRUCTION REVIEW OF THIS PROJECT. CONTRACTOR(S) MUST VERIFY ALL DIMENSIONS AND ADVISE AMERICAN TOWER OF ANY DISCREPANCIES. ANY PRIOR ISSUANCE OF THIS DRAWING IS SUPERSEDED BY THE LATEST VERSION ON FILE WITH AMERICAN TOWER.


| REV. | DESCRIPTION | BY | DATE |
|---|---|---|---|
| 0 | FOR CONSTRUCTION | CA | 07/19/19 |
| | | | |
| | | | |
| | | | |
| | | | |

ATC SITE NUMBER:

411261

ATC SITE NAME:

CROMWELLSW CT

SITE ADDRESS:
99 CHRISTIAN HILL ROAD
CROMWELL, CT 06416

SEAL:

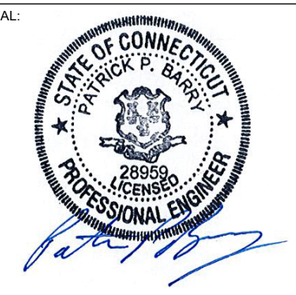


Authorized by "EOR"
Jul 19 2019 5:42 PM

T-Mobile

| | |
|---|---|
| DRAWN BY: | CA |
| APPROVED BY: | PPB |
| DATE DRAWN: | 04/24/19 |
| ATC JOB NO: | 12951823 |

DETAILED SITE PLAN & TOWER ELEVATION

| SHEET NUMBER: | REVISION: |
|---|---|
| C-501 | 0 |


Copyright © 2019 ATC IP LLC. All Rights Reserved.

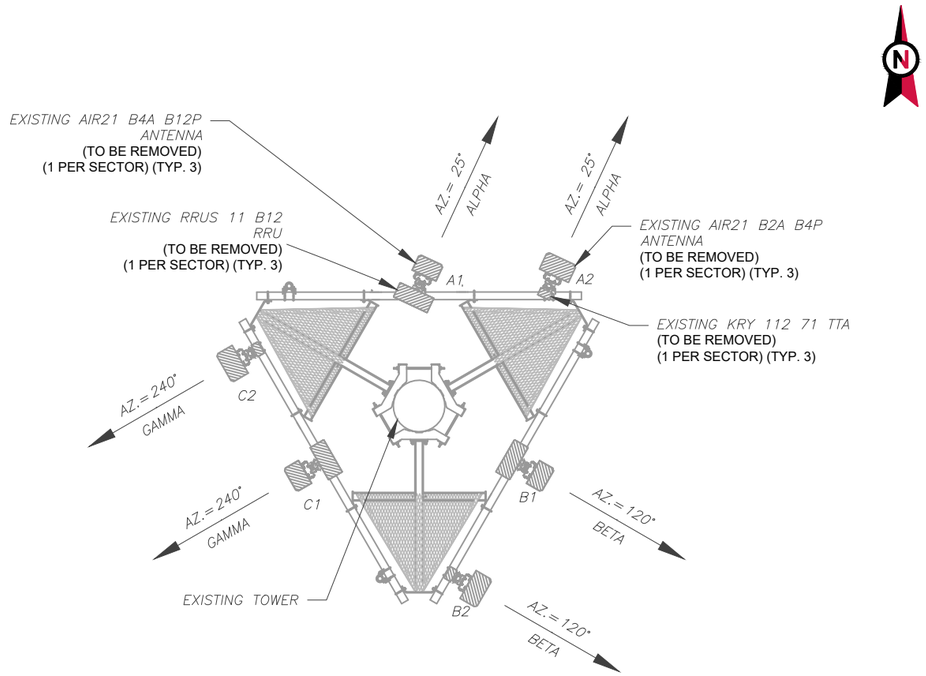


1 EXISTING ANTENNA PLAN

PER MOUNT ANALYSIS COMPLETED BY CLS ENGINEERING, DATED 07/09/19, THE EXISTING MOUNT CAN NOT ADEQUATELY SUPPORT THE PROPOSED LOADING. THE MOUNT MODIFICATION PROPOSED IN THE MOUNT ANALYSIS, INCLUDED AT THE END OF THIS PLAN SET, MUST BE INSTALLED PRIOR TO THE INSTALLATION OF THE PROPOSED ANTENNAS AND OTHER EQUIPMENT

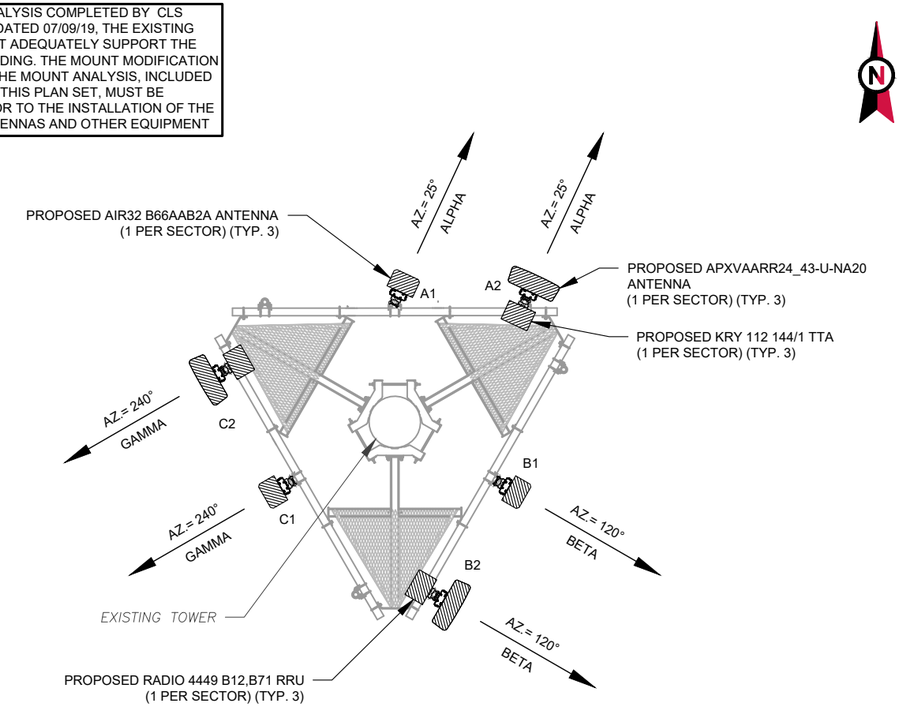


2 FINAL ANTENNA PLAN

EXISTING ANTENNA / EQUIPMENT SCHEDULE

| SECTOR | ANT. | MANUFACTURER (MODEL #) | RAD CENTER | AZIMUTH (TN) | MECH. D-TILT | ELEC. D-TILT | ADDITIONAL TOWER MOUNTED EQUIPMENT |
|---|---|---|---|---|---|---|---|
| ALPHA | A1 | AIR21 B4A_B12P | 108'-0" | 25° | 0° | – | RRUS11 B12 |
| ALPHA | A2 | AIR21 B2A_B4P | 108'-0" | 25° | 0° | – | KRY 112 71 |
| BETA | B1 | AIR21 B4A_B12P | 108'-0" | 120° | 0° | – | RRUS11 B12 |
| BETA | B2 | AIR21 B2A_B4P | 108'-0" | 120° | 0° | – | KRY 112 71 |
| GAMMA | C1 | AIR21 B4A_B12P | 108'-0" | 240° | 0° | – | RRUS11 B12 |
| GAMMA | C2 | AIR21 B2A_B4P | 108'-0" | 240° | 0° | – | KRY 112 71 |

NOTES

1. BASED ON APPROVED ATC APPLICATION 12925565, DATED 04/08/19. CONFIRM WITH T-MOBILE REP FOR APPLICABLE UPDATES/REVISIONS AND MOST RECENT RFDS FOR NSN CONFIGURATION (CONFIG). GC TO CAP ALL UNUSED PORTS.
2. ATC HAS NOT YET VERIFIED ANY EXISTING ANTENNA CONFIG OR MOUNT CONFIG. CONTRACTOR TO VERIFY MOUNT CONFIG HAS SUFFICIENT SPACE FOR PROPOSED LESSEE EQUIPMENT (EQUIP) (I.E. CLEARANCES, MOUNT PIPE, SUFFICIENT LENGTH, ETC.) ATC DID NOT ANALYZE ANTENNA MOUNT TO DETERMINE ADEQUATE STRUCTURAL CAPACITY FOR ANY LESSEE LOADING.
3. ALL PROPOSED EQUIP INCLUDING ANTENNAS, COAX, ETC. SHALL BE MOUNTED IN ACCORDANCE WITH THE TOWER STRUCTURAL ANALYSIS ON FILE WITH ATC'S CM.
4. CONFIRM SPACING OF PROPOSED EQUIP DOES NOT CAUSE TOWER CONFLICTS NOR IMPEDE TOWER CLIMBING PEGS.
5. POSITIONS START WITH FIRST PIPE ON THE LEFT SIDE (AS VIEWED FROM BEHIND THE MOUNT).

FINAL ANTENNA / EQUIPMENT SCHEDULE

| SECTOR | ANT. | MANUFACTURER (MODEL #) | RAD CENTER | AZIMUTH (TN) | MECH. D-TILT | ELEC. D-TILT | ADDITIONAL TOWER MOUNTED EQUIPMENT |
|---|---|---|---|---|---|---|---|
| ALPHA | A1 | AIR32 B66AAB2A | 108'-0" | 25° | 0° | 2° | - |
| ALPHA | A2 | APXVAARR24_43-U-NA20 | 108'-0" | 25° | 0° | 2° | RADIO 4449 B12,B71<br>KRY 112 144/1 |
| BETA | B1 | AIR32 B66AAB2A | 108'-0" | 120° | 0° | 2° | - |
| BETA | B2 | APXVAARR24_43-U-NA20 | 108'-0" | 120° | 0° | 2° | RADIO 4449 B12,B71<br>KRY 112 144/1 |
| GAMMA | C1 | AIR32 B66AAB2A | 108'-0" | 240° | 0° | 2° | - |
| GAMMA | C2 | APXVAARR24_43-U-NA20 | 108'-0" | 240° | 0° | 2° | RADIO 4449 B12,B71<br>KRY 112 144/1 |

| CURRENT FIBER DISTRIBUTION/OVP BOX | | CURRENT CABLING SUMMARY | | |
|---|---|---|---|---|
| MODEL NUMBER | STATUS | COAX | HYBRID | STATUS |
| – | – | (6) 1-5/8" | (1) 1-5/8" | RMN |
| – | – | (12) 1-5/8" | – | RMV |

STATUS ABBREVIATIONS
RMV: TO BE REMOVED
RMN: TO REMAIN
REL: TO BE RELOCATED
DSC: TO BE DISCONNECTED & REMAIN
ADD: TO BE ADDED

3 ANTENNA SCHEDULE

CABLE LENGTHS FOR JUMPERS
FIBER DISTRIBUTION/OVP TO RRU: 15'
RRU TO ANTENNA: 10'

| PROPOSED FIBER DISTRIBUTION/OVP BOX | | PROPOSED CABLING SUMMARY | | |
|---|---|---|---|---|
| MODEL NUMBER | STATUS | COAX | HYBRID | STATUS |
| - | - | (6) 1-5/8" | (1) 1-5/8" | RMN |
| - | - | - | (2) 1-5/8" | ADD |


AMERICAN TOWER®
A.T. ENGINEERING SERVICE, PLLC
3500 REGENCY PARKWAY
SUITE 100
CARY, NC 27518
PHONE: (919) 468-0112
COA: PEC.0001553



THESE DRAWINGS AND/OR THE ACCOMPANYING SPECIFICATION AS INSTRUMENTS OR SERVICE ARE THE EXCLUSIVE PROPERTY OF AMERICAN TOWER. THEIR USE AND PUBLICATION SHALL BE RESTRICTED TO THE ORIGINAL SITE FOR WHICH THEY ARE PREPARED. ANY USE OR DISCLOSURE OTHER THAN THAT WHICH RELATES TO AMERICAN TOWER OR THE SPECIFIED CARRIER IS STRICTLY PROHIBITED. TITLE TO THESE DOCUMENTS SHALL REMAIN THE PROPERTY OF AMERICAN TOWER WHETHER OR NOT THE PROJECT IS EXECUTED. NEITHER THE ARCHITECT NOR THE ENGINEER WILL BE PROVIDING ON-SITE CONSTRUCTION REVIEW OF THIS PROJECT. CONTRACTOR(S) MUST VERIFY ALL DIMENSIONS AND ADVISE AMERICAN TOWER OF ANY DISCREPANCIES. ANY PRIOR ISSUANCE OF THIS DRAWING IS SUPERSEDED BY THE LATEST VERSION ON FILE WITH AMERICAN TOWER.


| REV. | DESCRIPTION | BY | DATE |
|---|---|---|---|
| 0 | FOR CONSTRUCTION | CA | 07/19/19 |

ATC SITE NUMBER:
411261

ATC SITE NAME:
CROMWELLSW CT

SITE ADDRESS:
99 CHRISTIAN HILL ROAD
CROMWELL, CT 06416

SEAL:

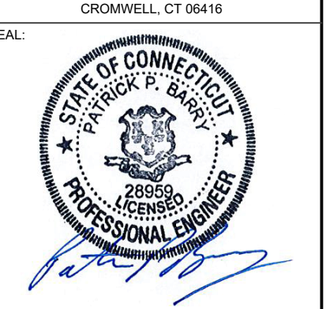


Authorized by "EOR"
Jul 19 2019 5:42 PM

T-Mobile design

| | |
|---|---|
| DRAWN BY: | CA |
| APPROVED BY: | PPB |
| DATE DRAWN: | 04/24/19 |
| ATC JOB NO: | 12951823 |

ANTENNA INFORMATION & SCHEDULE

| SHEET NUMBER: | REVISION: |
|---|---|
| C-501 | 0 |


Copyright © 2019 ATC IP LLC. All Rights Reserved.

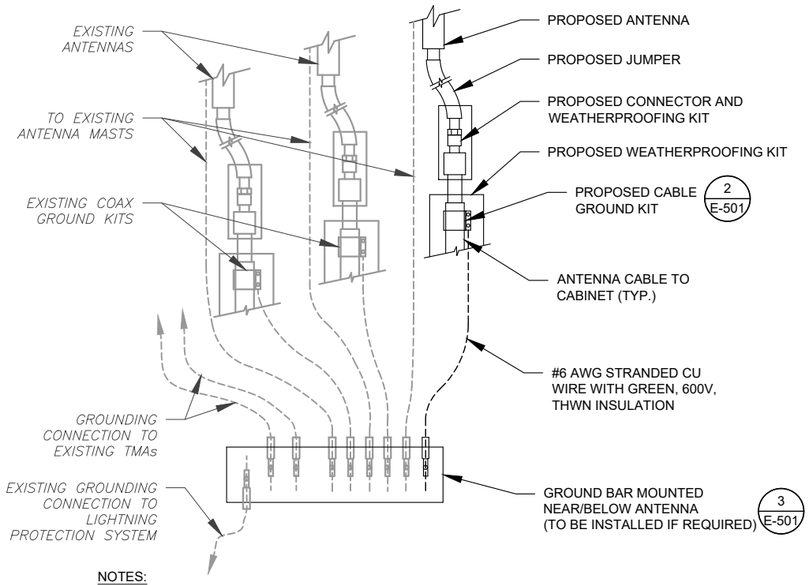


NOTES:

1. THIS DETAIL IS INTENDED TO SHOW THE GENERAL GROUNDING REQUIREMENTS. SLIGHT ADJUSTMENTS MAY BE REQUIRED BASED ON EXISTING SITE CONDITIONS. THE CONTRACTOR SHALL MAKE FIELD ADJUSTMENTS AS NEEDED AND INFORM THE CONSTRUCTION MANAGER OF ANY CONFLICTS.
2. SITE GROUNDING SHALL COMPLY WITH T-MOBILE GROUNDING STANDARDS, LATEST EDITION, AND COMPLY WITH T-MOBILE GROUNDING CHECKLIST, LATEST VERSION. WHEN NATIONAL AND LOCAL GROUNDING CODES ARE MORE STRINGENT THEY SHALL GOVERN.

## 1 TYPICAL ANTENNA GROUNDING DIAGRAM

SCALE: NOT TO SCALE

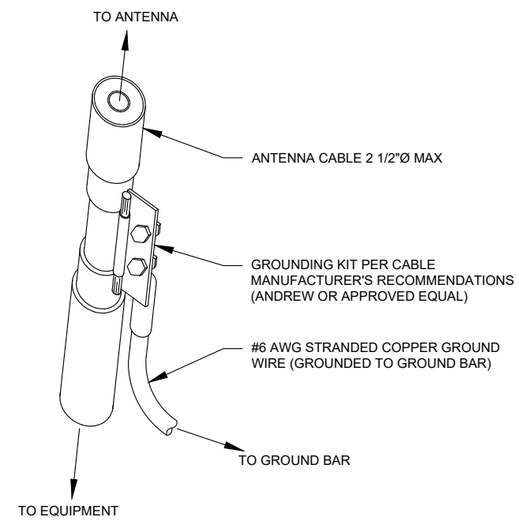


GROUND KIT NOTES:

1. DO NOT INSTALL CABLE GROUND KIT AT A BEND AND ALWAYS DIRECT GROUND WIRE DOWN TO GROUND BAR.
2. CONTRACTOR SHALL PROVIDE WEATHERPROOFING KIT (ANDREW PART NUMBER 221213) AND INSTALL/TAPE PER MANUFACTURER'S SPECIFICATIONS.

## 2 CABLE GROUND KIT CONNECTION DETAIL

SCALE: NOT TO SCALE

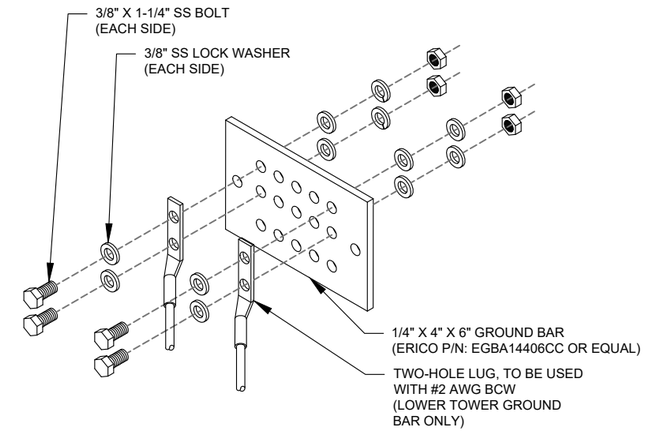


GROUND BAR NOTES:

1. GROUND BAR KITS COME WITH ALL HARDWARE, NUTS, BOLTS, WASHERS, ETC. EXCEPT THE STRUCTURAL MOUNTING MEMBER(S).
2. GROUND BAR TO BE BONDED DIRECTLY TO TOWER.

## 3 TOWER GROUND BAR DETAIL

SCALE: NOT TO SCALE

ELECTRICAL NOTES:

1. THIS DIAGRAM REPRESENTS THE BEST PRESENT KNOWLEDGE AVAILABLE TO THE ENGINEER AT THE TIME OF THIS DESIGN. THE CONTRACTOR SHALL VISIT THE SITE PRIOR TO CONSTRUCTION AND VERIFY ALL EXISTING CONDITIONS RELATED TO THE SCOPE OF WORK FOR THIS PROJECT.
2. IT IS THE RESPONSIBILITY OF THE CONTRACTOR TO COORDINATE WITH THE T-MOBILE REPRESENTATIVE AND LOCAL UTILITY COMPANY FOR THE INSTALLATION OF CONDUITS, CONDUCTORS, BREAKERS, DISCONNECTS, OR ANY OTHER EQUIPMENT REQUIRED FOR ELECTRICAL SERVICE. ALL ELECTRICAL WORK SHALL BE PERFORMED IN ACCORDANCE WITH LATEST EDITION OF THE STATE AND NATIONAL CODES, ORDINANCES AND REGULATIONS APPLICABLE TO THIS PROJECT.
3. ATC HAS NOT YET VERIFIED ANY EXISTING T-MOBILE GROUND EQUIPMENT OR ELECTRICAL LOADING. PROPOSED WORK BASED ON INSTALLATION CONFIGURATION PROVIDED BY T-MOBILE. CONTRACTOR TO VERIFY EXISTING T-MOBILE PANEL HAS SUFFICIENT SPACE FOR PROPOSED BREAKER.

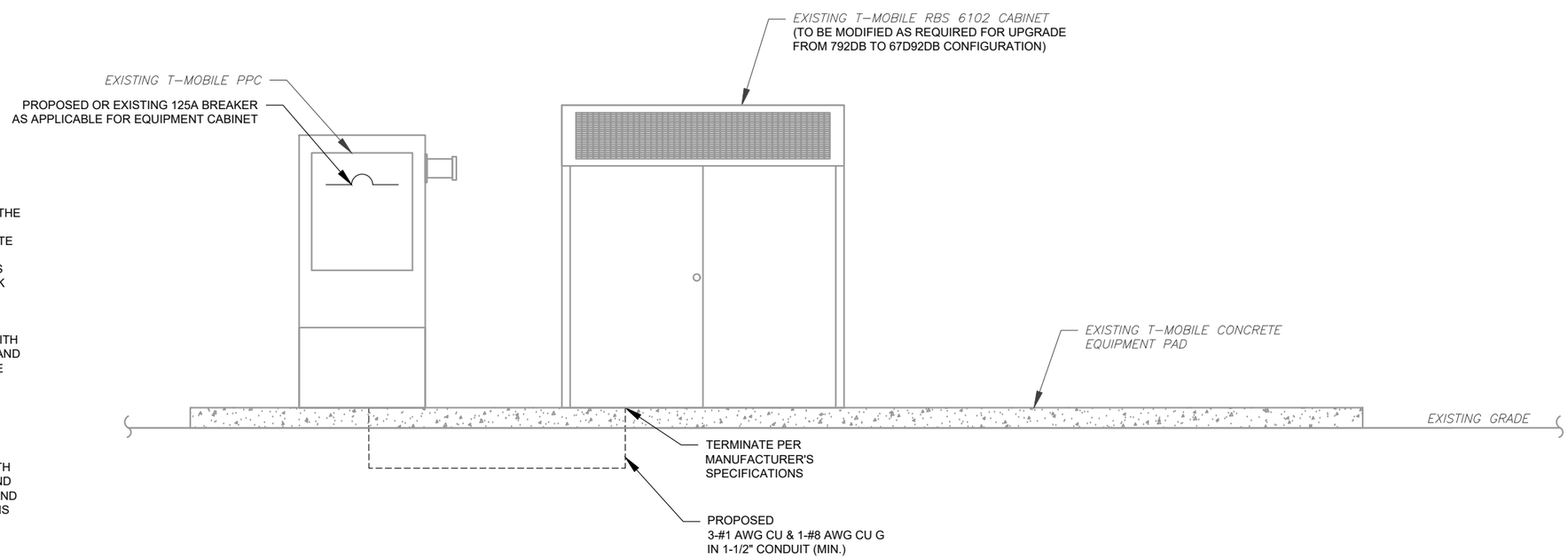


## 4 ELECTRICAL UPGRADE DIAGRAM

SCALE: NOT TO SCALE


AMERICAN TOWER®
A.T. ENGINEERING SERVICE, PLLC
3500 REGENCY PARKWAY
SUITE 100
CARY, NC 27518
PHONE: (919) 468-0112
COA: PEC.0001553



THESE DRAWINGS AND/OR THE ACCOMPANYING SPECIFICATION AS INSTRUMENTS OR SERVICE ARE THE EXCLUSIVE PROPERTY OF AMERICAN TOWER. THEIR USE AND PUBLICATION SHALL BE RESTRICTED TO THE ORIGINAL SITE FOR WHICH THEY ARE PREPARED. ANY USE OR DISCLOSURE OTHER THAN THAT WHICH RELATES TO AMERICAN TOWER OR THE SPECIFIED CARRIER IS STRICTLY PROHIBITED. TITLE TO THESE DOCUMENTS SHALL REMAIN THE PROPERTY OF AMERICAN TOWER WHETHER OR NOT THE PROJECT IS EXECUTED. NEITHER THE ARCHITECT NOR THE ENGINEER WILL BE PROVIDING ON-SITE CONSTRUCTION REVIEW OF THIS PROJECT. CONTRACTOR(S) MUST VERIFY ALL DIMENSIONS AND ADVISE AMERICAN TOWER OF ANY DISCREPANCIES. ANY PRIOR ISSUANCE OF THIS DRAWING IS SUPERSEDED BY THE LATEST VERSION ON FILE WITH AMERICAN TOWER.


| REV. | DESCRIPTION | BY | DATE |
|---|---|---|---|
| 0 | FOR CONSTRUCTION | CA | 07/19/19 |
| | | | |
| | | | |
| | | | |
| | | | |

ATC SITE NUMBER:

411261

ATC SITE NAME:

CROMWELLSW CT

SITE ADDRESS:
99 CHRISTIAN HILL ROAD
CROMWELL, CT 06416

SEAL:

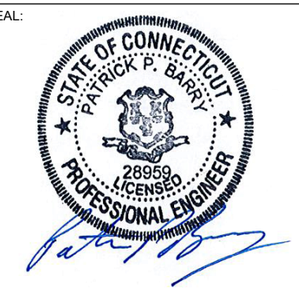


Authorized by "EOR"
Jul 19, 2019 5:42 PM

T-Mobile design

| | |
|---|---|
| DRAWN BY: | CA |
| APPROVED BY: | PPB |
| DATE DRAWN: | 04/24/19 |
| ATC JOB NO: | 12951823 |

GROUNDING DETAILS

| SHEET NUMBER: | REVISION: |
|---|---|
| C-501 | 0 |


Copyright © 2019 ATC IP LLC. All Rights Reserved.

DRAFT

**Existing RAN Equipment**

Template: 792DB Outdoor

| Enclosure | 1 | 2 |
|---|---|---|
| Enclosure Type | RBS 6131 | Generic Site Support Cabinet |
| Baseband | DUW30 (U2100) DUG20 (G1900) DUS41 (L2100 L1900 L700) | |
| Hybrid Cable System | | Ericsson 9x18 HCS *Select Length* |
| Multiplexer | XMU (L2100 L1900 L700) | |
| Radio | RU22 (x6) (U2100) | |

**Proposed RAN Equipment**

Template: 67D92DB Outdoor

| Enclosure | 1 | 2 |
|---|---|---|
| Enclosure Type | RBS 6131 | Ancillary Equipment |
| Baseband | DUW30 (U2100) DUG20 (G1900) BB 6630 (N600 (DARK)) BB 6630 (L2100 L1900 L700 L600) | |
| Hybrid Cable System | | Ericsson 6x12 HCS *Select AWG & Length* (x3) |
| Radio | RU22 (x6) (U2100) | |

RAN Scope of Work:

Remove 6 coax and add 3 Hybrids.

1 CABINET CONFIGURATION

SCALE: NOT TO SCALE

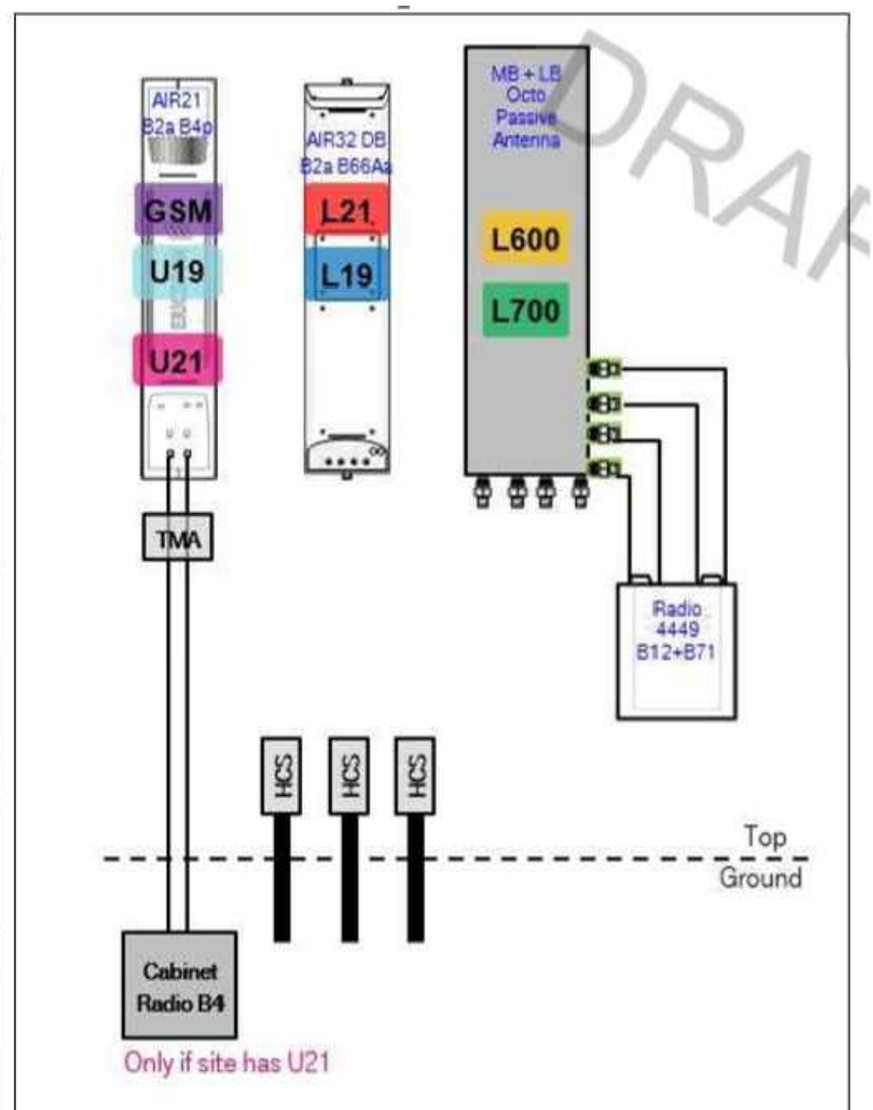


Notes:

2 ANTENNA CONFIGURATION

SCALE: NOT TO SCALE

NOTE: THIS SHEET CREATED BY OTHERS AND PROVIDED BY REQUEST OF CUSTOMER WITHOUT EDIT.

SUPPLEMENTAL

| SHEET NUMBER: | REVISION: |
|---|---|
| C-501 | 0 |

Copyright © 2019 ATC IP LLC. All Rights Reserved.

## Mount Analysis of Existing Low Profile Platform for American Tower on behalf of T-Mobile
## 411261 - CROMWELLSW CT
## Project #: 12925565

**T-Mobile Site ID: CTHA240A**
**Program: L600**

**CLS Engineering PLLC Project #41124-12925565-01-MA-R1**
**July 9, 2019**

| | |
|---|---|
| MOUNT DESCRIPTION | Existing Low Profile Platform at 108 ft AGL |
| ANTENNA ELEVATION | Nominal Rad. Elevation of 108 ft AGL |
| SITE DESCRIPTION | 111 ft Monopole |
| SITE ADDRESS | 99 Christian Hill Road, Cromwell, CT, 06416-2612, Middlesex County |
| GPS COORDINATES | 41.60621, -72.701206 |
| ANALYSIS STANDARD | 2015 IBC / 2018 Connecticut State Building Code / TIA-222-G |
| LOADING CRITERIA | 125 mph, $V_{ult}$ / 96.8 mph, $V_{asd}$ (3-Second Gust) w/o ice & 50 mph (3-Second Gust) w/ 1" Ice |

- **ANALYSIS RESULT:** **Pass (Conditional)**

| | | |
|---|---|---|
| MEMBER USAGE | 64% | Pass |

**Modifications are proposed to bring mounts into compliance; see conclusion for details.**

Prepared by:
**Sean Rock, E.I.**

Reviewed and Approved by:
**Tyler M. Barker, P.E.**

STATE OF CONNECTICUT
TYLER M BARKER
No. 32402
LICENSED
PROFESSIONAL ENGINEER

Tyler M. Barker
CLS Engineering, PLLC
Director of Engineering
PE # 32402 Exp. 1/31/2020
COA # PEC.001833 Exp. 8/14/2019

IdenTrust. Part of HID Global
Digitally signed by Tyler Barker
DN: c=US, o=Telamon Corporation, ou=A01427E00000016A4525ADF800001D17, cn=Tyler Barker
Date: 2019.07.09 13:45:26 -04'00'



Mount Analysis of Existing Low Profile Platform for American Tower on behalf of T-Mobile
411261 - CROMWELLSW CT
Project #: 12925565
T-Mobile Site ID: CTHA240A
Program: L600
CLS Engineering PLLC Project #41124-12925565-01-MA-R1
July 9, 2019

MOUNT DESCRIPTION: Existing Low Profile Platform at 108 ft AGL
ANTENNA ELEVATION: Nominal Rad. Elevation of 108 ft AGL
SITE DESCRIPTION: 111 ft Monopole
SITE ADDRESS: 99 Christian Hill Road, Cromwell, CT, 06416-2612, Middlesex County
GPS COORDINATES: 41.60621, -72.701206
ANALYSIS STANDARD: 2015 IBC / 2018 Connecticut State Building Code / TIA-222-G
LOADING CRITERIA: 125 mph, $V_{ult}$ / 96.8 mph, $V_{asd}$ (3-Second Gust) w/o ice & 50 mph (3-Second Gust) w/ 1" Ice
ANALYSIS RESULT: Pass (Conditional)
MEMBER USAGE 64% Pass
Modifications are proposed to bring mounts into compliance; see conclusion for details.
Prepared by: Sean Rock, E.I.
Reviewed and Approved by: Tyler M. Barker, P.E.
STATE OF CONNECTICUT TYLER M BARKER No. 32402 LICENSED PROFESSIONAL ENGINEER
Tyler M. Barker CLS Engineering, PLLC Director of Engineering PE # 32402 Exp. 1/31/2020 COA # PEC.001833 Exp. 8/14/2019
IdenTrust. Part of HID Global
Digitally signed by Tyler Barker DN: c=US, o=Telamon Corporation, ou=A01427E00000016A4525ADF800001D17, cn=Tyler Barker Date: 2019.07.09 13:45:26 -04'00'
CLS ENGINEERING PLLC • 319 Chapanoke Road, Suite 118, Raleigh, NC 27603 • Engineering@clsengineeringpllc.com Page 1

Copyright © 2019 ATC IP LLC. All Rights Reserved.

SUPPLEMENTAL

| SHEET NUMBER: | REVISION: |
|---|---|
| C-501 | 0 |

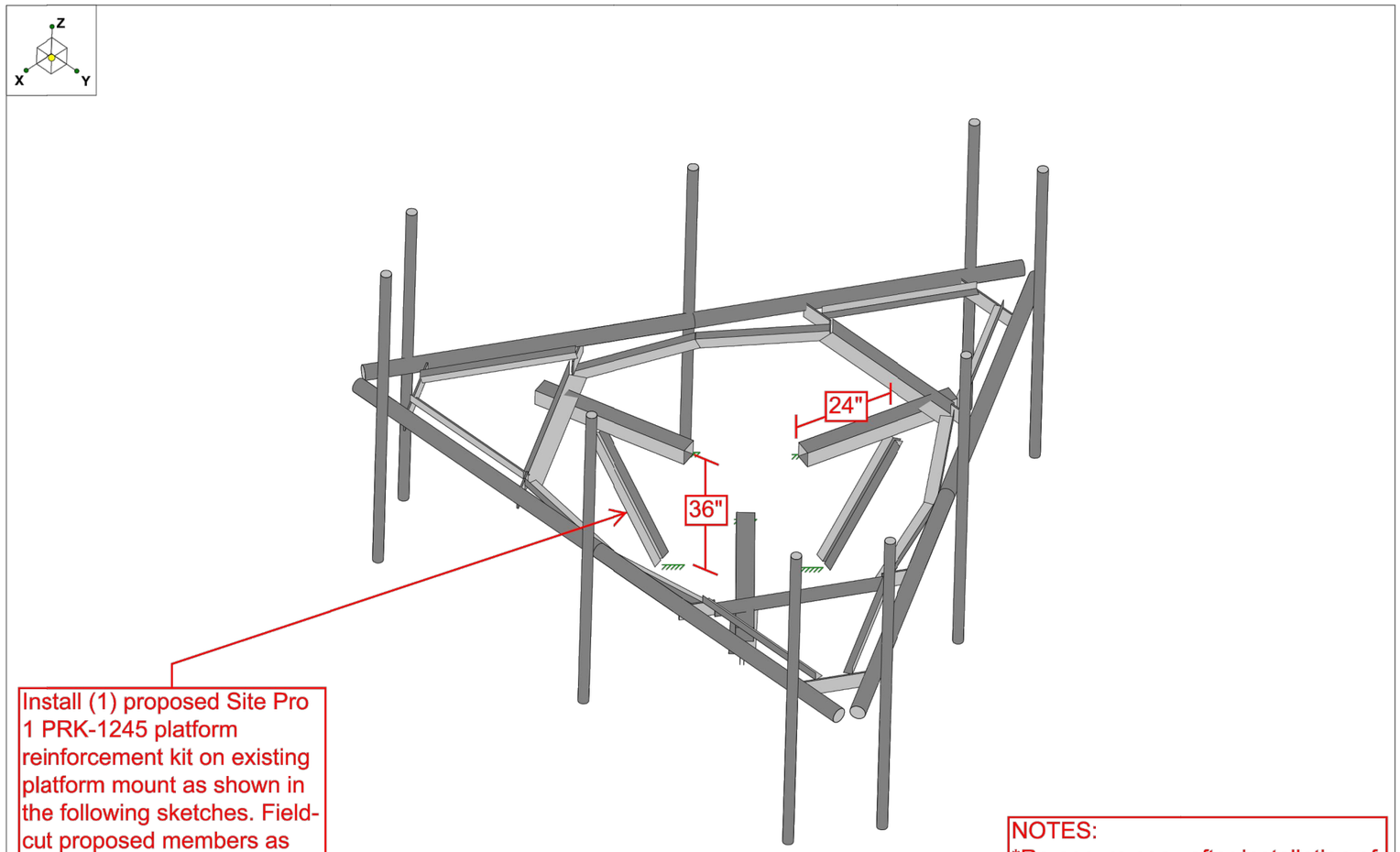


Install (1) proposed Site Pro 1 PRK-1245 platform reinforcement kit on existing platform mount as shown in the following sketches. Field-cut proposed members as required. Maintain minimum bolt edge distance.

NOTES:
*Re-secure coax after installation of proposed kit.
*Do not pinch safety climb.

Envelope Only Solution

| | | |
|---|---|---|
| CLS | | SK - 0 |
| SMR | 41124-12925565-CROMWELLSW CT | July 8, 2019 at 9:07 AM |
| 41124-12925565-01-MA-R1 | Installation Sketch - Isometric View | 41124-12625565-01-MA-R1.r3d |

SUPPLEMENTAL

| SHEET NUMBER: | REVISION: |
|---|---|
| C-501 | 0 |

Copyright © 2019 ATC IP LLC. All Rights Reserved.

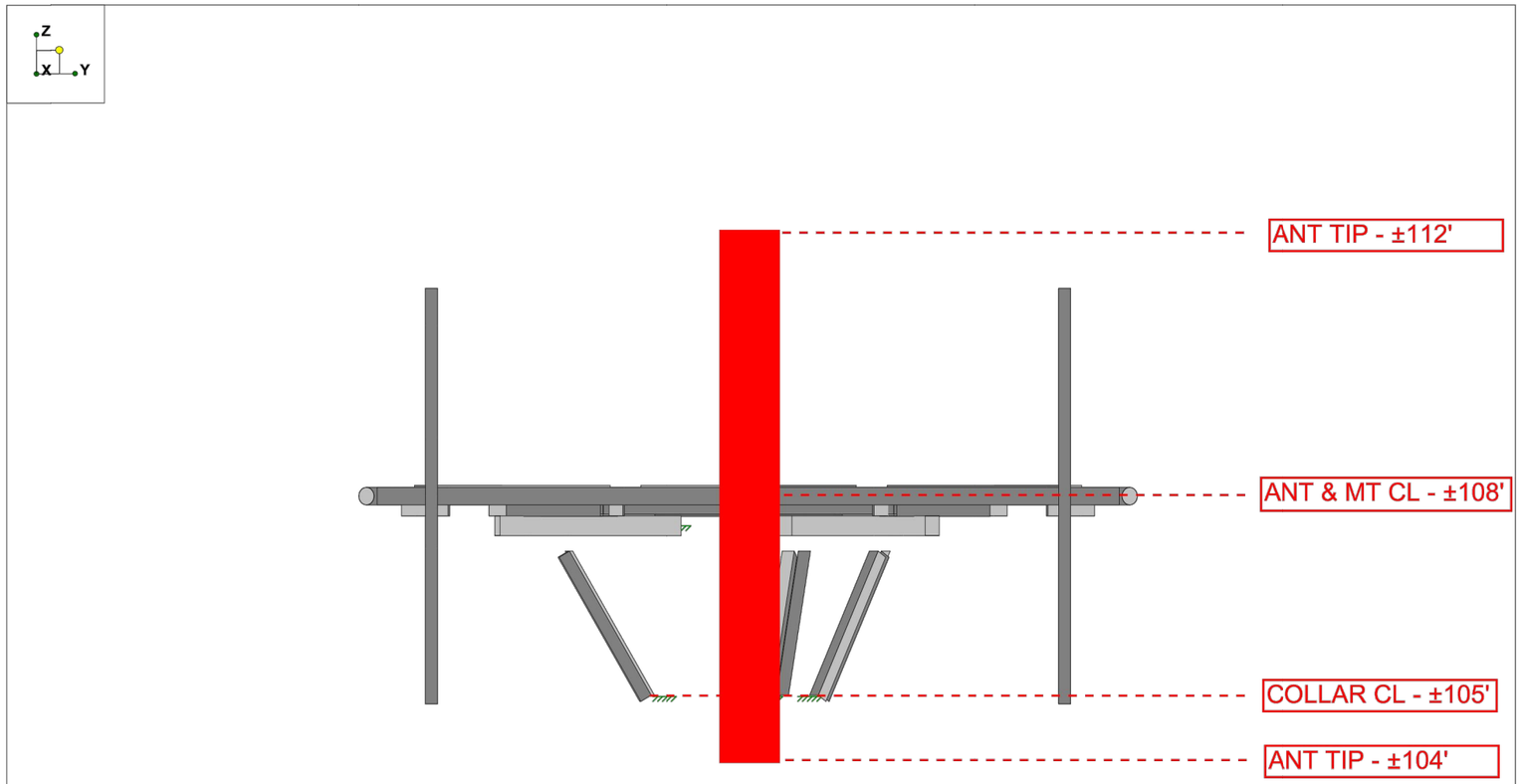


Envelope Only Solution

| | | |
|---|---|---|
| CLS | 41124-12925565-CROMWELLSW CT | SK - 0 |
| SMR | | July 8, 2019 at 9:09 AM |
| 41124-12925565-01-MA-R1 | Installation Sketch - Elevation View | 41124-12625565-01-MA-R1.r3d |

SUPPLEMENTAL

| SHEET NUMBER: | REVISION: |
|---|---|
| C-501 | 0 |

Copyright © 2019 ATC IP LLC. All Rights Reserved.

# Exhibit D

## Structural Analysis Report

AMERICAN TOWER®
CORPORATION

# Structural Analysis Report

| | | |
|---|---|---|
| **Structure** | : | **111 ft Self Supported Tower** |
| **ATC Site Name** | : | **CromwellSW CT, CT** |
| **ATC Site Number** | : | **411261** |
| **Engineering Number** | : | **12925565_C3_03** |
| **Proposed Carrier** | : | **T-Mobile** |
| **Carrier Site Name** | : | **CTHA240A** |
| **Carrier Site Number** | : | **CTHA240A** |
| **Site Location** | : | **100 Berlin Road**<br>**Cromwell, CT 06416-2612**<br>**41.606200,-72.701200** |
| **County** | : | **Middlesex** |
| **Date** | : | **July 18, 2019** |
| **Max Usage** | : | **83%** |
| **Result** | : | **Pass** |

Prepared By:
Travis J. Gatling
Structural Engineer II

Reviewed By:

NORTH CAROLINA PROFESSIONAL SEAL 038669 ENGINEER ESHA K. MODI

Authorized by "EOR"
Jul 18 2019 3:21 PM cosign

**COA: PEC.0001553**

**Table of Contents**

Introduction ..... 1

Supporting Documents ..... 1

Analysis ..... 1

Conclusion ..... 1

Existing and Reserved Equipment ..... 2

Equipment to be Removed ..... 2

Proposed Equipment ..... 2

Structure Usages ..... 3

Foundations ..... 3

Standard Conditions ..... 4

Calculations ..... Attached

## Introduction

The purpose of this report is to summarize results of a structural analysis performed on the 111 ft self supported tower to reflect the change in loading by T-Mobile.

## Supporting Documents

| | |
|---|---|
| **Tower Drawings** | Mapping by ETS, Job #150929.01, dated August 21, 2015 |
| **Foundation Drawing** | Mapping by ETS, Job #150929.01, dated August 21, 2015<br>Mapping by ETS, Job #150929.01, dated June 13, 2016 |
| **Geotechnical Report** | FDH Velocitel Project #15BWZR1600, dated August 18, 2015 |
| **Mount Analysis** | CLS Engineering PLLC Project #41124-12925565-01-MA-R1, dated July 9, 2019 |

## Analysis

The tower was analyzed using RISA 3-D tower analysis software. This program considers an elastic three-dimensional model and second-order effects per ANSI/EIA-222.

| | |
|---|---|
| **Basic Wind Speed:** | 85 mph (Fastest Mile) |
| **Basic Wind Speed w/ Ice:** | 50 mph (Fastest Mile)w/ 3/4" radial ice concurrent |
| **Code:** | ANSI/TIA/EIA-222-G / 2015 IBC / 2018 Connecticut State Building Code |
| **Structure Class:** | II |
| **Exposure Category:** | C |
| **Topographic Category:** | 1 |
| **Crest Height:** | 0 ft |

## Conclusion

Based on the analysis results, the structure meets the requirements per the applicable codes listed above. The tower and foundation can support the equipment as described in this report.

If you have any questions or require additional information, please contact American Tower via email at Engineering@americantower.com. Please include the American Tower site name, site number, and engineering number in the subject line for any questions.

## Existing and Reserved Equipment

| Elev.[1] (ft) | Qty | Antenna | Mount Type | Lines | Carrier |
|---|---|---|---|---|---|
| 108.0 | - | - | - | (1) 1 5/8" (1.63"-41.3mm) Fiber<br>(6) 1 5/8" Coax | T-MOBILE |
| 98.0 | 1 | Raycap DC6-48-60-18-8F | Low Profile Platform | (2) 0.39" (10mm) Fiber Trunk<br>(4) 0.78" (19.7mm) 8 AWG 6<br>(12) 1 5/8" Coax<br>(1) 1 5/8" Hybriflex | AT&T MOBILITY |
| | 1 | Raycap DC6-48-60-18-8F(32.8 lbs) | | | |
| | 3 | Ericsson RRUS 32 B2 | | | |
| | 3 | Ericsson RRUS 11 B2 | | | |
| | 3 | Ericsson RRUS-32 (77 lbs) | | | |
| | 3 | Powerwave Allgon 7770.00 | | | |
| | 3 | Quintel QS66512-2 | | | |
| | 3 | CCI OPA-65R-LCUU-H6 | | | |
| | 3 | Powerwave Allgon 7020.00 Dual Band RET | | | |
| | 12 | Powerwave Allgon LGP21401 | | | |
| 88.0 | 1 | Generic GPS | Platform with Handrails | (1) 1/2" Coax<br>(18) 1 5/8" Coax<br>(1) 1 5/8" Hybriflex | VERIZON WIRELESS |
| 84.0 | 6 | Amphenol Antel BXA-171085-12BF-EDIN-X | | | |
| | 4 | Decibel DB846F65ZAXY | | | |
| | 3 | Antel BXA-70063/6CF_4 | | | |
| | 3 | Alcatel-Lucent RRH2x40-AWS | | | |
| | 2 | Antel LPA-80080/6CF ___ | | | |
| 83.0 | 1 | Raycap RRFDC-3315-PF-48 | | | |
| 80.0 | 3 | RFS APXV18-206517S-C | Leg | (6) 1 5/8" Coax | METRO PCS INC |
| 50.0 | 1 | NAiS VIC-100 | Leg | - | T-MOBILE |

## Equipment to be Removed

| Elev.[1] (ft) | Qty | Antenna | Mount Type | Lines | Carrier |
|---|---|---|---|---|---|
| 108.0 | 3 | Ericsson KRY 112 71 | Low Profile Platform | (12) 1 5/8" Coax | T-MOBILE |
| | 3 | Ericsson AIR 21 B4A/12-B5P 2.4M | | | |
| | 3 | Ericsson AIR 21 B4A B2P | | | |
| | 3 | Ericsson RRUS 11 B12 | | | |

## Proposed Equipment

| Elev.[1] (ft) | Qty | Antenna | Mount Type | Lines | Carrier |
|---|---|---|---|---|---|
| 108.0 | 3 | Ericsson KRY 112 144/1 | Low Profile Platform with Site pro 1 PRK-1245 Platform Reinforcement Kit | (2) 1 5/8" (1.63"-41.3mm) Fiber | T-MOBILE |
| | 3 | Ericsson Radio 4449 B12,B71 | | | |
| | 3 | Ericsson AIR32 B66Aa/B2a | | | |
| | 3 | RFS APXVAARR24_43-U-NA20 | | | |

[1] Contracted elevations are shown for appurtenances within contracted installation tolerances. Appurtenances outside of contract limits are shown at installed elevations.

Install proposed lines alongside existing T-Mobile lines.

## Structure Usages

| Structural Component | Controlling Usage | Pass/Fail |
|---|---|---|
| Legs | 36% | Pass |
| Diagonals | 83% | Pass |
| Horizontals | 11% | Pass |

## Foundations

| Reaction Component | Analysis Reactions | % of Usage |
|---|---|---|
| Moment (Kip-ft) | 2,120.7 | 53% |
| Axial (Kips) | 152.1 | 25% |
| Total Shear (Kips) | 38.6 | 74% |

The structure base reactions resulting from this analysis were found to be acceptable through analysis based on geotechnical and foundation information, therefore no modification or reinforcement of the foundation will be required.

**Standard Conditions**

All engineering services performed by A.T. Engineering Service, PLLC are prepared on the basis that the information used is current and correct. This information may consist of, but is not limited to the following:

- Information supplied by the client regarding antenna, mounts and feed line loading
- Information from drawings, design and analysis documents, and field notes in the possession of A.T. Engineering Service, PLLC

It is the responsibility of the client to ensure that the information provided to A.T. Engineering Service, PLLC and used in the performance of our engineering services is correct and complete.

All assets of American Tower Corporation, its affiliates and subsidiaries (collectively "American Tower") are inspected at regular intervals. Based upon these inspections and in the absence of information to the contrary, American Tower assumes that all structures were constructed in accordance with the drawings and specifications.

Unless explicitly agreed by both the client and A.T. Engineering Service, PLLC, all services will be performed in accordance with the current revision of ANSI/TIA-222.

All services are performed, results obtained, and recommendations made in accordance with generally accepted engineering principles and practices. A.T. Engineering Service, PLLC is not responsible for the conclusions, opinions and recommendations made by others based on the information supplied herein.

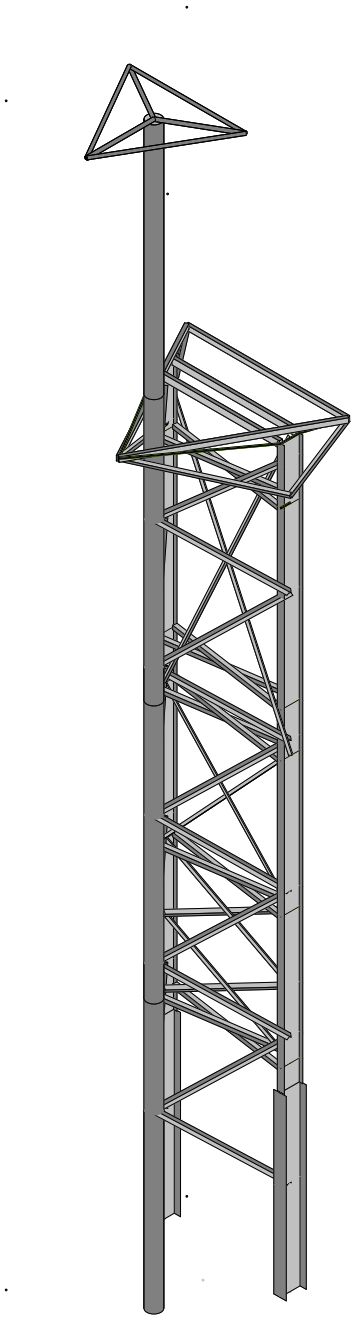

| | | |
|---|---|---|
| T-Mobile | CromwellSW CT, CT (411261) | SK - 7 |
| DAVI | | Apr 24, 2019 at 3:24 PM |
| 411261 | | T-MOBILE @ 411261 CROMWEL... |

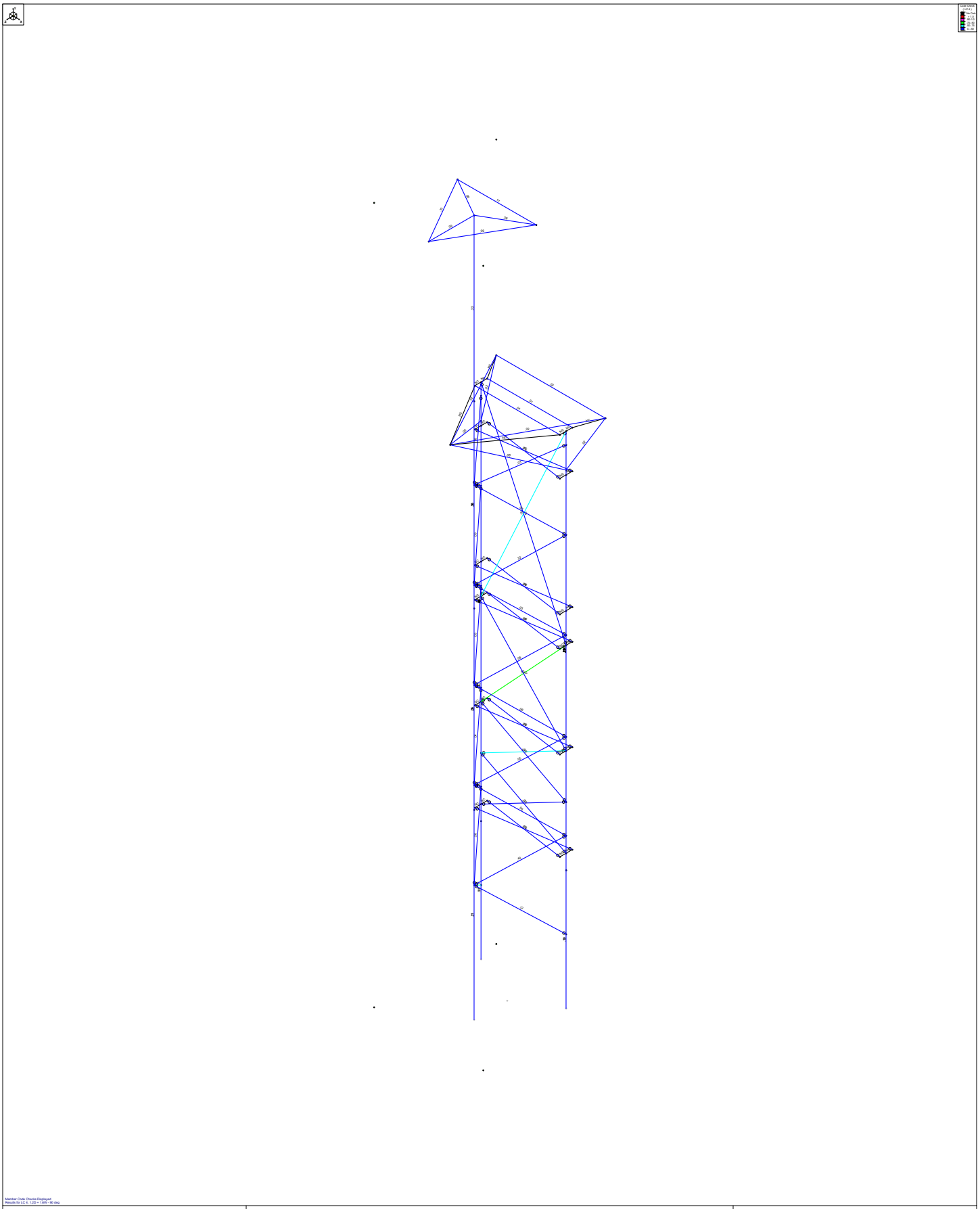


| | | |
|---|---|---|
| T-Mobile | CromwellSW CT, CT (411261) | SK - 8 |
| DAVI | | Apr 24, 2019 at 3:25 PM |
| 411261 | | T-MOBILE @ 411261 CROMWEL... |

## Hot Rolled Steel Section Sets

| | Label | Shape | Type | Design List | Material | Design Rules | A [in2] | Iyy [in4] | Izz [in4] | J [in4] |
|---|---|---|---|---|---|---|---|---|---|---|
| 1 | W24x68 w1... | W24x68 w1... | None | None | A572 Gr.50 | Typical | 51.845 | 753.17 | 6681.05 | 27.435 |
| 2 | L3.5x3.5x0.... | L3.5X3.5X5 | None | None | A36 Gr.36 | Typical | 2.1 | 2.44 | 2.44 | .073 |
| 3 | L5x5x3/8 w... | L5x5x3/8 w... | None | None | A36 Gr.36 | Typical | 5.256 | 9.617 | 9.617 | 3.099 |
| 4 | L3x3x5/16 | L3X3X5 | None | None | A36 Gr.36 | Typical | 1.78 | 1.5 | 1.5 | .06 |
| 5 | 18"x0.5" | HSS18x0.5... | None | None | A53 Gr.B | Typical | 25.6 | 985 | 985 | 1970 |
| 6 | WT6x15 | WT6X15 | None | None | A36 Gr.36 | Typical | 4.4 | 10.2 | 13.5 | .228 |
| 7 | HSS6x4x1/4 | HSS6X4X4 | None | None | A36 Gr.36 | Typical | 4.3 | 11.1 | 20.9 | 23.6 |
| 8 | HSS8x4x1/4 | HSS8X4X4 | None | None | A36 Gr.36 | Typical | 5.24 | 14.4 | 42.5 | 35.3 |
| 9 | L5x5x3/4 | L5X5X12 | None | None | A36 Gr.36 | Typical | 6.98 | 15.7 | 15.7 | 1.33 |
| 10 | 3.5" Pipe | PIPE_3.0 | None | None | A53 Gr.B | Typical | 2.07 | 2.85 | 2.85 | 5.69 |
| 11 | W24x68 | W24X68 | None | None | A572 Gr.50 | Typical | 20.1 | 70.4 | 1830 | 1.87 |
| 12 | L5x5x3/8 | L5X5X6 | None | None | A36 Gr.36 | Typical | 3.65 | 8.76 | 8.76 | .183 |
| 13 | L4x4x5/16 ... | L4x4x5/16 ... | None | None | A36 Gr.36 | Typical | 3.79 | 4.63 | 4.63 | 2.166 |
| 14 | HSS4x4x1/4 | HSS4x0.250 | None | None | A36 Gr.36 | Typical | 2.76 | 4.91 | 4.91 | 9.82 |

## Joint Coordinates and Temperatures

| | Label | X [ft] | Y [ft] | Z [ft] | Temp [F] | Detach From Diap... |
|---|---|---|---|---|---|---|
| 1 | N1 | 0 | 1 | 0 | 0 | |
| 2 | N2 | 13.5 | 1 | 0 | 0 | |
| 3 | N3 | 6.75 | 0 | 7.854167 | 0 | |
| 4 | N4 | 0 | 11.208333 | 0 | 0 | |
| 5 | N5 | 13.5 | 11.208333 | 0 | 0 | |
| 6 | N8 | 0 | 22.333333 | 0 | 0 | |
| 7 | N9 | 13.5 | 22.333333 | 0 | 0 | |
| 8 | N10 | 0 | 24.75 | 0 | 0 | |
| 9 | N11 | 13.5 | 24.75 | 0 | 0 | |
| 10 | N6 | 0 | 20 | 0 | 0 | |
| 11 | N7 | 13.5 | 20 | 0 | 0 | |
| 12 | N12 | 0 | 29.375 | 0 | 0 | |
| 13 | N13 | 13.5 | 29.375 | 0 | 0 | |
| 14 | N14 | 0 | 36.416666 | 0 | 0 | |
| 15 | N15 | 13.5 | 36.416666 | 0 | 0 | |
| 16 | N16 | 0 | 38.333333 | 0 | 0 | |
| 17 | N17 | 13.5 | 38.333333 | 0 | 0 | |
| 18 | N18 | 0 | 50.916666 | 0 | 0 | |
| 19 | N19 | 13.5 | 50.916666 | 0 | 0 | |
| 20 | N20 | 0 | 52.333333 | 0 | 0 | |
| 21 | N21 | 13.5 | 52.333333 | 0 | 0 | |
| 22 | N22 | 0 | 55.666666 | 0 | 0 | |
| 23 | N23 | 13.5 | 55.666666 | 0 | 0 | |
| 24 | N24 | 0 | 66.083333 | 0 | 0 | |
| 25 | N25 | 13.5 | 66.083333 | 0 | 0 | |
| 26 | N26 | 0 | 74.336666 | 0 | 0 | |
| 27 | N27 | 13.5 | 74.336666 | 0 | 0 | |
| 28 | N28 | 0 | 78.458333 | 0 | 0 | |
| 29 | N29 | 13.5 | 78.458333 | 0 | 0 | |
| 30 | N30 | 0 | 80.336666 | 0 | 0 | |
| 31 | N31 | 13.5 | 80.336666 | 0 | 0 | |
| 32 | N32 | 6.75 | 18.5 | 7.854167 | 0 | |

## Joint Coordinates and Temperatures (Continued)

| | Label | X [ft] | Y [ft] | Z [ft] | Temp [F] | Detach From Diap... |
|---|---|---|---|---|---|---|
| 33 | N33 | 6.75 | 28.833333 | 7.854167 | 0 | |
| 34 | N34 | 6.75 | 32.25 | 7.854167 | 0 | |
| 35 | N35 | 6.75 | 46 | 7.854167 | 0 | |
| 36 | N36 | 6.75 | 56.541667 | 7.854167 | 0 | |
| 37 | N37 | 6.75 | 59.75 | 7.854167 | 0 | |
| 38 | N38 | 6.75 | 73.5 | 7.854167 | 0 | |
| 39 | N39 | 6.75 | 85.020833 | 7.854167 | 0 | |
| 40 | N40 | 6.75 | 110.5625 | 7.854167 | 0 | |
| 41 | N41 | 0 | 22.333333 | -0.9875 | 0 | |
| 42 | N42 | 13.5 | 22.333333 | -0.9875 | 0 | |
| 43 | N43 | 0 | 22.333333 | 0.9875 | 0 | |
| 44 | N44 | 13.5 | 22.333333 | 0.9875 | 0 | |
| 45 | N45 | 0 | 36.416666 | -0.9875 | 0 | |
| 46 | N46 | 13.5 | 36.416666 | -0.9875 | 0 | |
| 47 | N47 | 0 | 36.416666 | 0.9875 | 0 | |
| 48 | N48 | 13.5 | 36.416666 | 0.9875 | 0 | |
| 49 | N49 | 0 | 50.916666 | -0.9875 | 0 | |
| 50 | N50 | 13.5 | 50.916666 | -0.9875 | 0 | |
| 51 | N51 | 0 | 50.916666 | 0.9875 | 0 | |
| 52 | N52 | 13.5 | 50.916666 | 0.9875 | 0 | |
| 53 | N53 | 0 | 55.666666 | -0.9875 | 0 | |
| 54 | N54 | 13.5 | 55.666666 | -0.9875 | 0 | |
| 55 | N55 | 0 | 55.666666 | 0.9875 | 0 | |
| 56 | N56 | 13.5 | 55.666666 | 0.9875 | 0 | |
| 57 | N57 | 0 | 74.336666 | -0.9875 | 0 | |
| 58 | N58 | 13.5 | 74.336666 | -0.9875 | 0 | |
| 59 | N59 | 0 | 74.336666 | 0.9875 | 0 | |
| 60 | N60 | 13.5 | 74.336666 | 0.9875 | 0 | |
| 61 | N61 | 0 | 80.336666 | -0.9875 | 0 | |
| 62 | N62 | 13.5 | 80.336666 | -0.9875 | 0 | |
| 63 | N63 | 0 | 80.336666 | 0.9875 | 0 | |
| 64 | N64 | 13.5 | 80.336666 | 0.9875 | 0 | |
| 65 | N67 | -1.9103 | 80.92 | -4.320833 | 0 | |
| 66 | N68 | 15.4103 | 80.92 | -4.320833 | 0 | |
| 67 | N69 | 6.75 | 80.92 | 11.666667 | 0 | |
| 68 | N68A | 0 | 75.003333 | 0 | 0 | |
| 69 | N69A | 13.5 | 75.003333 | 0 | 0 | |
| 70 | N93 | .5 | 110.5625 | 4.2457 | 0 | |
| 71 | N94 | 13 | 110.5625 | 4.2457 | 0 | |
| 72 | N95 | 6.75 | 110.5625 | 15.071 | 0 | |
| 73 | N75 | -1.9103 | 1 | 15.071 | 0 | |
| 74 | N76 | 15.4103 | 1 | 15.071 | 0 | |
| 75 | N75A | -1.9103 | 111.5625 | 15.071 | 0 | |
| 76 | N76A | 15.4103 | 111.5625 | 15.071 | 0 | |
| 77 | N77 | -1.9103 | -0. | -4.320833 | 0 | |
| 78 | N78 | -1.9103 | 110.5625 | -4.320833 | 0 | |
| 79 | N79 | 6.75 | 0 | 2.6181 | 0 | |

## Basic Load Cases

| | BLC Description | Category | X Gravity | Y Gravity | Z Gravity | Joint | Point | Distributed | Area(Memb... | Surface(Plate... |
|---|---|---|---|---|---|---|---|---|---|---|
| 1 | Dead | DL | | -1 | | 6 | | 6 | | |
| 2 | Structure - Wind Z | WLZ | | | | | | 22 | | |
| 3 | Structure - Wind X | WLX | | | | | | 22 | | |
| 4 | Ice Dead | OL1 | | -.16 | | 6 | | 6 | | |
| 5 | Structure - Wind Ice Z | OL2 | | | | | | 22 | | |
| 6 | Structure - Wind Ice X | OL3 | | | | | | 22 | | |
| 7 | APP - Wind Z | WLZ | | | | 6 | | | | |
| 8 | APP - Wind X | WLX | | | | 6 | | 16 | | |
| 9 | APP - Wind Ice Z | OL2 | | | | 6 | | | | |
| 10 | APP - Wind Ice X | OL3 | | | | 6 | | 16 | | |

## Load Combinations

| | Description | Solve | PDelta | S... | B... | Fa... | B... | Fa... | B... | Fa... | BLC | Fa... | B... | Fa... | B... | Fa... | B... | Fa... | B... | Fa... | B... | Fa... | B... | Fa... |
|---|---|---|---|---|---|---|---|---|---|---|---|---|---|---|---|---|---|---|---|---|---|---|---|---|
| 1 | 1.2D + 1.6W - 0 ... | Yes | Y | | DL | 1.2 | W... | 1.6 | W... | | | | | | | | | | | | | | | |
| 2 | 1.2D + 1.6W - 30... | Yes | Y | | DL | 1.2 | W... | 1.39 | W... | .8 | | | | | | | | | | | | | | |
| 3 | 1.2D + 1.6W - 60... | Yes | Y | | DL | 1.2 | W... | .8 | W... | 1.39 | | | | | | | | | | | | | | |
| 4 | 1.2D + 1.6W - 90... | Yes | Y | | DL | 1.2 | W... | | W... | 1.6 | | | | | | | | | | | | | | |
| 5 | 1.2D + 1.6W - 12... | Yes | Y | | DL | 1.2 | W... | -.8 | W... | 1.39 | | | | | | | | | | | | | | |
| 6 | 1.2D + 1.6W - 15... | Yes | Y | | DL | 1.2 | W... | -1.... | W... | .8 | | | | | | | | | | | | | | |
| 7 | 1.2D + 1.6W - 18... | Yes | Y | | DL | 1.2 | W... | -1.6 | W... | | | | | | | | | | | | | | | |
| 8 | 1.2D + 1.6W - 21... | Yes | Y | | DL | 1.2 | W... | -1.... | W... | -.8 | | | | | | | | | | | | | | |
| 9 | 1.2D + 1.6W - 24... | Yes | Y | | DL | 1.2 | W... | -.8 | W... | -1.... | | | | | | | | | | | | | | |
| 10 | 1.2D + 1.6W - 27... | Yes | Y | | DL | 1.2 | W... | | W... | -1.6 | | | | | | | | | | | | | | |
| 11 | 1.2D + 1.6W - 30... | Yes | Y | | DL | 1.2 | W... | .8 | W... | -1.... | | | | | | | | | | | | | | |
| 12 | 1.2D + 1.6W - 33... | Yes | Y | | DL | 1.2 | W... | 1.39 | W... | -.8 | | | | | | | | | | | | | | |
| 13 | 1.2D + 1.0Di + 1.... | Yes | Y | | DL | 1.2 | O... | 1 | O... | | OL1 | 1 | | | | | | | | | | | | |
| 14 | 1.2D + 1.0Di + 1.... | Yes | Y | | DL | 1.2 | O... | .87 | O... | .5 | OL1 | 1 | | | | | | | | | | | | |
| 15 | 1.2D + 1.0Di + 1.... | Yes | Y | | DL | 1.2 | O... | .5 | O... | .87 | OL1 | 1 | | | | | | | | | | | | |
| 16 | 1.2D + 1.0Di + 1.... | Yes | Y | | DL | 1.2 | O... | | O... | 1 | OL1 | 1 | | | | | | | | | | | | |
| 17 | 1.2D + 1.0Di + 1.... | Yes | Y | | DL | 1.2 | O... | -.5 | O... | .87 | OL1 | 1 | | | | | | | | | | | | |
| 18 | 1.2D + 1.0Di + 1.... | Yes | Y | | DL | 1.2 | O... | -.87 | O... | .5 | OL1 | 1 | | | | | | | | | | | | |
| 19 | 1.2D + 1.0Di + 1.... | Yes | Y | | DL | 1.2 | O... | -1 | O... | | OL1 | 1 | | | | | | | | | | | | |
| 20 | 1.2D + 1.0Di + 1.... | Yes | Y | | DL | 1.2 | O... | -.87 | O... | -.5 | OL1 | 1 | | | | | | | | | | | | |
| 21 | 1.2D + 1.0Di + 1.... | Yes | Y | | DL | 1.2 | O... | -.5 | O... | -.87 | OL1 | 1 | | | | | | | | | | | | |
| 22 | 1.2D + 1.0Di + 1.... | Yes | Y | | DL | 1.2 | O... | | O... | -1 | OL1 | 1 | | | | | | | | | | | | |
| 23 | 1.2D + 1.0Di + 1.... | Yes | Y | | DL | 1.2 | O... | .5 | O... | -.87 | OL1 | 1 | | | | | | | | | | | | |
| 24 | 1.2D + 1.0Di + 1.... | Yes | Y | | DL | 1.2 | O... | .87 | O... | -.5 | OL1 | 1 | | | | | | | | | | | | |

## Joint Loads and Enforced Displacements (BLC 1 : Dead)

| | Joint Label | L,D,M | Direction | Magnitude[(lb,k-ft), (in,rad), (lb*s^2/ft, lb*s... |
|---|---|---|---|---|
| 1 | N95 | L | Z | -345.1 |
| 2 | N94 | L | Y | -345.1 |
| 3 | N93 | L | Y | -345.1 |
| 4 | N67 | L | Y | -687.1 |
| 5 | N68 | L | Y | -687.1 |
| 6 | N69 | L | Y | -687.1 |

## Joint Loads and Enforced Displacements (BLC 4 : Ice Dead)

| | Joint Label | L,D,M | Direction | Magnitude[(lb,k-ft), (in,rad), (lb*s^2/ft, lb*s... |
|---|---|---|---|---|
| 1 | N95 | L | Y | -713.3 |
| 2 | N94 | L | Y | -713.3 |
| 3 | N93 | L | Y | -713.3 |
| 4 | N67 | L | Y | -2087.3 |
| 5 | N68 | L | Y | -2087.3 |
| 6 | N69 | L | Y | -2087.3 |

## Joint Loads and Enforced Displacements (BLC 7 : APP - Wind Z)

| | Joint Label | L,D,M | Direction | Magnitude[(lb,k-ft), (in,rad), (lb*s^2/ft, lb*s... |
|---|---|---|---|---|
| 1 | N95 | L | Z | -555.4 |
| 2 | N94 | L | Z | -357.8 |
| 3 | N93 | L | Z | -357.8 |
| 4 | N67 | L | Z | -1185.7 |
| 5 | N68 | L | Z | -1002.4 |
| 6 | N69 | L | Z | -1002.4 |

## Joint Loads and Enforced Displacements (BLC 8 : APP - Wind X)

| | Joint Label | L,D,M | Direction | Magnitude[(lb,k-ft), (in,rad), (lb*s^2/ft, lb*s... |
|---|---|---|---|---|
| 1 | N95 | L | X | -298.4 |
| 2 | N94 | L | X | -493.9 |
| 3 | N93 | L | X | -493.9 |
| 4 | N67 | L | X | -1010.9 |
| 5 | N68 | L | X | -1175.1 |
| 6 | N69 | L | X | -1175.1 |

## Joint Loads and Enforced Displacements (BLC 9 : APP - Wind Ice Z)

| | Joint Label | L,D,M | Direction | Magnitude[(lb,k-ft), (in,rad), (lb*s^2/ft, lb*s... |
|---|---|---|---|---|
| 1 | N95 | L | Z | -171 |
| 2 | N94 | L | Z | -160.6 |
| 3 | N93 | L | Z | -160.6 |
| 4 | N67 | L | Z | -393.8 |
| 5 | N68 | L | Z | -484.8 |
| 6 | N69 | L | Z | -484.8 |

## Joint Loads and Enforced Displacements (BLC 10 : APP - Wind Ice X)

| | Joint Label | L,D,M | Direction | Magnitude[(lb,k-ft), (in,rad), (lb*s^2/ft, lb*s... |
|---|---|---|---|---|
| 1 | N95 | L | X | -161.5 |
| 2 | N94 | L | X | -170.2 |
| 3 | N93 | L | X | -170.2 |
| 4 | N67 | L | X | -561.7 |
| 5 | N68 | L | X | -442.8 |
| 6 | N69 | L | X | -442.8 |

## Member Area Loads

| Joint A | Joint B | Joint C | Joint D | Direction | Distribution | Magnitude[psf] |
|---|---|---|---|---|---|---|
| No Data to Print ... | | | | | | |

## Member AISC 14th(360-10): LRFD Steel Code Checks

| | LC | Member | Shape | UC Max | Loc[ft] | Shear UC | Loc[ft] | Dir | phi*Pnc[lb] | phi*Pnt[lb] | phi*Mnyy... | phi*Mnzz... | Cb | Eqn |
|---|---|---|---|---|---|---|---|---|---|---|---|---|---|---|
| 1 | 1 | M1 | W24x68 w1... | .199 | 0 | .056 | 0 | y | 1.73781e... | 2.33302e... | 564.878 | 2134.343 | 1.938 | H1-1b |
| 2 | 1 | M2 | W24x68 w1... | .204 | 0 | .057 | 0 | y | 1.73781e... | 2.33302e... | 564.878 | 2134.343 | 1.932 | H1-1b |
| 3 | 1 | M3 | W24X68 | .242 | 0 | .015 | 0 | y | 492994.2... | 904500 | 91.875 | 206.052 | 2.746 | H1-1b |
| 4 | 1 | M4 | W24X68 | .244 | 0 | .017 | 0 | y | 492994.2... | 904500 | 91.875 | 205.196 | 2.734 | H1-1b |
| 5 | 1 | M5 | HSS18x0.500 | .300 | 0 | .013 | 0 | | 687685.7... | 806400 | 375.375 | 375.375 | 2.428 | H1-1a |
| 6 | 1 | M6 | HSS18x0.500 | .111 | 3.175 | .013 | 17.318 | | 696116.0... | 806400 | 375.375 | 375.375 | 2.51 | H1-1b |
| 7 | 1 | M7 | HSS18x0.500 | .363 | 16.91 | .050 | 16.91 | | 690364.7... | 806400 | 375.375 | 375.375 | 2.06 | H1-1b |
| 8 | 1 | M8 | HSS18x0.500 | .224 | 0 | .016 | 0 | | 711671.5... | 806400 | 375.375 | 375.375 | 1.667 | H1-1b |
| 9 | 1 | M29 | L5X5X6 | .075 | 6.822 | .003 | 0 | y | 29906.084 | 118260 | 7.418 | 12.233 | 1.136 | H2-1 |
| 10 | 1 | M30 | L5X5X6 | .075 | 6.822 | .003 | 0 | z | 29906.084 | 118260 | 7.418 | 12.233 | 1.136 | H2-1 |
| 11 | 1 | M31 | L5X5X6 | .057 | 6.822 | .003 | 0 | y | 29906.084 | 118260 | 7.418 | 12.233 | 1.136 | H2-1 |
| 12 | 1 | M32 | L5X5X6 | .057 | 6.822 | .003 | 0 | z | 29906.084 | 118260 | 7.418 | 12.233 | 1.136 | H2-1 |
| 13 | 1 | M33 | L5X5X6 | .058 | 6.822 | .003 | 0 | y | 29906.084 | 118260 | 7.418 | 12.233 | 1.136 | H2-1 |
| 14 | 1 | M34 | L5X5X6 | .058 | 6.822 | .003 | 0 | z | 29906.084 | 118260 | 7.418 | 12.233 | 1.136 | H2-1 |
| 15 | 1 | M35 | L5X5X6 | .067 | 6.822 | .003 | 0 | y | 29906.084 | 118260 | 7.418 | 12.233 | 1.136 | H2-1 |
| 16 | 1 | M36 | L5X5X6 | .067 | 6.822 | .003 | 0 | z | 29906.084 | 118260 | 7.418 | 12.233 | 1.136 | H2-1 |
| 17 | 1 | M37 | L5X5X6 | .069 | 6.822 | .003 | 0 | y | 29906.084 | 118260 | 7.418 | 12.233 | 1.136 | H2-1 |
| 18 | 1 | M38 | L5X5X6 | .069 | 6.822 | .003 | 0 | z | 29906.084 | 118260 | 7.418 | 12.233 | 1.136 | H2-1 |
| 19 | 1 | M39 | L5X5X6 | .064 | 7.613 | .003 | 15.226 | y | 74549.701 | 118260 | 7.418 | 11.768 | 1.136 | H2-1 |
| 20 | 1 | M40 | L5X5X6 | .061 | 7.613 | .003 | 0 | y | 74549.701 | 118260 | 7.418 | 11.768 | 1.136 | H2-1 |
| 21 | 1 | M41 | L5X5X6 | .060 | 7.613 | .003 | 15.226 | y | 24012.917 | 118260 | 7.418 | 11.768 | 1.136 | H2-1 |
| 22 | 1 | M42 | L5X5X6 | .065 | 7.613 | .003 | 0 | y | 74549.701 | 118260 | 7.418 | 11.768 | 1.136 | H2-1 |
| 23 | 1 | M43 | L3.5X3.5X5 | .300 | 9.699 | .003 | 0 | y | 15754.264 | 68040 | 2.882 | 3.881 | 1.136 | H2-1 |
| 24 | 1 | M44 | L3.5X3.5X5 | .269 | 9.699 | .003 | 0 | y | 15754.264 | 68040 | 2.882 | 3.881 | 1.136 | H2-1 |
| 25 | 1 | M45 | L5x5x3/8 wH... | .304 | 15.848 | .004 | 32.37 | y | 30839.58 | 170301.5... | 10.651 | 7.793 | 1.136 | H2-1 |
| 26 | 1 | M46 | L5x5x3/8 wH... | .282 | 15.848 | .004 | 32.37 | y | 30839.58 | 170301.5... | 10.651 | 7.793 | 1.136 | H2-1 |
| 27 | 1 | M47 | WT6X15 | .245 | 6.201 | .004 | 0 | y | 76798.045 | 142560 | 12.906 | 11.902 | 1.136 | H1-1a |
| 28 | 1 | M48 | WT6X15 | .329 | 0 | .007 | 0 | y | 76798.045 | 142560 | 12.906 | 7.439 | 2.279 | H1-1a |
| 29 | 1 | M49 | WT6X15 | .086 | 6.048 | .003 | 12.096 | y | 79928.999 | 142560 | 12.906 | 11.902 | 1.136 | H1-1b |
| 30 | 1 | M50 | WT6X15 | .086 | 6.048 | .003 | 12.096 | y | 79928.999 | 142560 | 12.906 | 11.902 | 1.136 | H1-1b |
| 31 | 1 | M51 | WT6X15 | .324 | 6.26 | .003 | 12.787 | y | 76128.484 | 142560 | 12.906 | 11.902 | 1.136 | H1-1a |
| 32 | 1 | M52 | WT6X15 | .333 | 6.26 | .003 | 0 | y | 76128.484 | 142560 | 12.906 | 11.902 | 1.136 | H1-1a |
| 33 | 1 | M53 | WT6X15 | .092 | 6.005 | .003 | 0 | y | 80394.207 | 142560 | 12.906 | 11.902 | 1.136 | H1-1b |
| 34 | 1 | M54 | WT6X15 | .094 | 6.005 | .003 | 12.011 | y | 80394.207 | 142560 | 12.906 | 11.902 | 1.136 | H1-1b |
| 35 | 1 | M55 | WT6X15 | .270 | 6.308 | .003 | 12.885 | y | 75583.143 | 142560 | 12.906 | 11.902 | 1.136 | H1-1a |
| 36 | 1 | M56 | WT6X15 | .278 | 6.308 | .003 | 12.885 | y | 75583.143 | 142560 | 12.906 | 11.902 | 1.136 | H1-1a |
| 37 | 1 | M57 | WT6X15 | .075 | 6.07 | .003 | 0 | y | 79692.549 | 142560 | 12.906 | 11.902 | 1.136 | H1-1b |
| 38 | 1 | M58 | WT6X15 | .077 | 6.07 | .003 | 12.139 | y | 79692.549 | 142560 | 12.906 | 11.902 | 1.136 | H1-1b |
| 39 | 1 | M59 | WT6X15 | .144 | 0 | .003 | 12.738 | y | 76397.946 | 142560 | 12.906 | 11.902 | 1.136 | H1-1b* |
| 40 | 1 | M60 | WT6X15 | .151 | 0 | .004 | 0 | y | 76397.946 | 142560 | 12.906 | 11.902 | 1.136 | H1-1b* |
| 41 | 1 | M61 | WT6X15 | .092 | 6.07 | .004 | 0 | y | 79692.549 | 142560 | 12.906 | 11.902 | 1.136 | H1-1b |
| 42 | 1 | M62 | WT6X15 | .094 | 6.07 | .003 | 0 | y | 79692.549 | 142560 | 12.906 | 11.902 | 1.136 | H1-1b |
| 43 | 1 | M63 | WT6X15 | .282 | 6.236 | .005 | 12.738 | y | 76397.946 | 142560 | 12.906 | 11.902 | 1.136 | H1-1a |
| 44 | 1 | M64 | WT6X15 | .289 | 6.236 | .005 | 12.738 | y | 76397.946 | 142560 | 12.906 | 11.902 | 1.136 | H1-1a |
| 45 | 1 | M65 | WT6X15 | .042 | 5.741 | .006 | 0 | y | 83252.56 | 142560 | 12.906 | 11.902 | 1.136 | H1-1b |
| 46 | 1 | M66 | WT6X15 | .043 | 5.741 | .006 | 0 | y | 83252.56 | 142560 | 12.906 | 11.902 | 1.136 | H1-1b |
| 47 | 1 | M71 | HSS8X4X4 | .009 | 13.5 | .002 | 13.5 | y | 102691.6... | 169776 | 22.14 | 35.91 | 2.381 | H1-1b |
| 48 | 1 | M72 | HSS8X4X4 | .009 | 0 | .002 | 0 | y | 102691.6... | 169776 | 22.14 | 35.91 | 2.381 | H1-1b |
| 49 | 1 | M75 | HSS6X4X4 | .021 | 18.182 | .003 | 0 | y | 52673.992 | 139320 | 17.415 | 23.031 | 2.381 | H1-1b |
| 50 | 1 | M76 | HSS6X4X4 | .021 | 0 | .003 | 18.182 | y | 52673.992 | 139320 | 17.415 | 23.031 | 2.381 | H1-1b |
| 51 | 1 | M77 | HSS6X4X4 | .019 | 17.321 | .003 | 17.321 | y | 57728.58 | 139320 | 17.415 | 23.031 | 2.381 | H1-1b |

## Member AISC 14th(360-10): LRFD Steel Code Checks (Continued)

| | LC | Member | Shape | UC Max | Loc[ft] | Shear UC | Loc[ft] | Dir | phi*Pnc[lb] | phi*Pnt[lb] | phi*Mnyy... | phi*Mnzz... | Cb | Eqn |
|---|---|---|---|---|---|---|---|---|---|---|---|---|---|---|
| 52 | 1 | M76A | L4x4x5/16 w... | .015 | 0 | .001 | 0 | y | 59982.319 | 122790.8... | 5.57 | 9.968 | 2.621 | H2-1 |
| 53 | 1 | M77A | L4x4x5/16 w... | .020 | 0 | .001 | 0 | y | 59982.319 | 122790.8... | 5.57 | 9.968 | 2.922 | H2-1 |
| 54 | 1 | M78 | L4x4x5/16 w... | .052 | 14.72 | .002 | 0 | y | 16644.398 | 122790.8... | 5.57 | 9.968 | 2.394 | H2-1 |
| 55 | 1 | M79 | L4x4x5/16 w... | .056 | 14.72 | .002 | 0 | y | 16644.398 | 122790.8... | 5.57 | 9.968 | 2.331 | H2-1 |
| 56 | 1 | M84 | PIPE_3.0 | .086 | 0 | .023 | 0 | | 28250.611 | 65205 | 5.749 | 5.749 | 1.619 | H1-1b |
| 57 | 1 | M85 | PIPE_3.0 | .086 | 12.5 | .023 | 12.5 | | 28250.611 | 65205 | 5.749 | 5.749 | 1.619 | H1-1b |
| 58 | 1 | M86 | PIPE_3.0 | .119 | 0 | .003 | 0 | | 28250.554 | 65205 | 5.749 | 5.749 | 1.225 | H1-1b |
| 59 | 1 | M87 | HSS4x0.250 | .345 | 0 | .041 | 0 | | 71625.082 | 89424 | 8.937 | 8.937 | 2.178 | H1-1b |
| 60 | 1 | M88 | HSS4x0.250 | .060 | 7.217 | .005 | 0 | | 71625.341 | 89424 | 8.937 | 8.937 | 1.966 | H1-1b |
| 61 | 1 | M89 | HSS4x0.250 | .345 | 0 | .041 | 0 | | 71625.082 | 89424 | 8.937 | 8.937 | 2.178 | H1-1b |
| 62 | 2 | M1 | W24x68 w1... | .188 | 0 | .040 | 0 | y | 1.73781e... | 2.33302e... | 564.878 | 2134.343 | 1.574 | H1-1b |
| 63 | 2 | M2 | W24x68 w1... | .306 | 0 | .060 | 9.104 | y | 1.73781e... | 2.33302e... | 564.878 | 2134.343 | 2.89 | H1-1b |
| 64 | 2 | M3 | W24X68 | .227 | 0 | .037 | 0 | y | 492994.2... | 904500 | 91.875 | 225.669 | 3.007 | H1-1b |
| 65 | 2 | M4 | W24X68 | .465 | 0 | .014 | 1.886 | z | 492994.2... | 904500 | 91.875 | 190.013 | 2.532 | H1-1a |
| 66 | 2 | M5 | HSS18x0.500 | .225 | 0 | .022 | 0 | | 687685.7... | 806400 | 375.375 | 375.375 | 2.334 | H1-1b |
| 67 | 2 | M6 | HSS18x0.500 | .097 | 3.175 | .017 | 17.318 | | 696116.0... | 806400 | 375.375 | 375.375 | 2.378 | H1-1b |
| 68 | 2 | M7 | HSS18x0.500 | .368 | 16.91 | .054 | 16.91 | | 690364.7... | 806400 | 375.375 | 375.375 | 1.48 | H1-1b |
| 69 | 2 | M8 | HSS18x0.500 | .226 | 0 | .019 | 0 | | 711671.5... | 806400 | 375.375 | 375.375 | 1.835 | H1-1b |
| 70 | 2 | M29 | L5X5X6 | .072 | 6.822 | .004 | 0 | y | 29906.084 | 118260 | 7.418 | 12.233 | 1.136 | H2-1 |
| 71 | 2 | M30 | L5X5X6 | .072 | 6.822 | .004 | 0 | z | 29906.084 | 118260 | 7.418 | 12.233 | 1.136 | H2-1 |
| 72 | 2 | M31 | L5X5X6 | .056 | 6.822 | .003 | 0 | y | 29906.084 | 118260 | 7.418 | 12.233 | 1.136 | H2-1 |
| 73 | 2 | M32 | L5X5X6 | .056 | 6.822 | .003 | 0 | z | 29906.084 | 118260 | 7.418 | 12.233 | 1.136 | H2-1 |
| 74 | 2 | M33 | L5X5X6 | .058 | 6.822 | .003 | 0 | y | 29906.084 | 118260 | 7.418 | 12.233 | 1.136 | H2-1 |
| 75 | 2 | M34 | L5X5X6 | .058 | 6.822 | .003 | 0 | z | 29906.084 | 118260 | 7.418 | 12.233 | 1.136 | H2-1 |
| 76 | 2 | M35 | L5X5X6 | .066 | 6.822 | .003 | 0 | y | 29906.084 | 118260 | 7.418 | 12.233 | 1.136 | H2-1 |
| 77 | 2 | M36 | L5X5X6 | .066 | 6.822 | .003 | 0 | z | 29906.084 | 118260 | 7.418 | 12.233 | 1.136 | H2-1 |
| 78 | 2 | M37 | L5X5X6 | .067 | 6.822 | .003 | 0 | y | 29906.084 | 118260 | 7.418 | 12.233 | 1.136 | H2-1 |
| 79 | 2 | M38 | L5X5X6 | .067 | 6.822 | .003 | 0 | z | 29906.084 | 118260 | 7.418 | 12.233 | 1.136 | H2-1 |
| 80 | 2 | M39 | L5X5X6 | .122 | 7.613 | .004 | 15.226 | y | 74549.701 | 118260 | 7.418 | 11.768 | 1.136 | H2-1 |
| 81 | 2 | M40 | L5X5X6 | .104 | 7.613 | .003 | 0 | y | 74549.701 | 118260 | 7.418 | 11.768 | 1.136 | H2-1 |
| 82 | 2 | M41 | L5X5X6 | .360 | 7.454 | .003 | 0 | y | 24012.917 | 118260 | 7.418 | 11.768 | 1.136 | H2-1 |
| 83 | 2 | M42 | L5X5X6 | .118 | 7.613 | .003 | 0 | y | 74549.701 | 118260 | 7.418 | 11.768 | 1.136 | H2-1 |
| 84 | 2 | M43 | L3.5X3.5X5 | .165 | 9.906 | .003 | 0 | y | 15754.264 | 68040 | 2.882 | 3.881 | 1.136 | H2-1 |
| 85 | 2 | M44 | L3.5X3.5X5 | .595 | 9.699 | .003 | 0 | y | 15754.264 | 68040 | 2.882 | 3.881 | 1.136 | H2-1 |
| 86 | 2 | M45 | L5x5x3/8 wH... | .197 | 16.185 | .004 | 32.37 | y | 30839.58 | 170301.5... | 10.651 | 7.793 | 1.136 | H2-1 |
| 87 | 2 | M46 | L5x5x3/8 wH... | .451 | 15.848 | .004 | 0 | y | 30839.58 | 170301.5... | 10.651 | 7.793 | 1.136 | H2-1 |
| 88 | 2 | M47 | WT6X15 | .029 | 6.333 | .004 | 0 | y | 76798.045 | 142560 | 12.906 | 11.902 | 1.136 | H1-1b |
| 89 | 2 | M48 | WT6X15 | .602 | 0 | .012 | 0 | y | 76798.045 | 142560 | 12.906 | 7.439 | 2.474 | H1-1a |
| 90 | 2 | M49 | WT6X15 | .033 | 6.048 | .004 | 12.096 | y | 79928.999 | 142560 | 12.906 | 11.902 | 1.136 | H1-1b |
| 91 | 2 | M50 | WT6X15 | .247 | 6.048 | .005 | 0 | y | 79928.999 | 142560 | 12.906 | 11.902 | 1.136 | H1-1a |
| 92 | 2 | M51 | WT6X15 | .226 | 6.26 | .003 | 12.787 | y | 76128.484 | 142560 | 12.906 | 11.902 | 1.136 | H1-1a |
| 93 | 2 | M52 | WT6X15 | .351 | 6.26 | .004 | 0 | y | 76128.484 | 142560 | 12.906 | 11.902 | 1.136 | H1-1a |
| 94 | 2 | M53 | WT6X15 | .075 | 6.005 | .003 | 12.011 | y | 80394.207 | 142560 | 12.906 | 11.902 | 1.136 | H1-1b |
| 95 | 2 | M54 | WT6X15 | .093 | 6.005 | .004 | 0 | y | 80394.207 | 142560 | 12.906 | 11.902 | 1.136 | H1-1b |
| 96 | 2 | M55 | WT6X15 | .146 | 0 | .004 | 12.885 | y | 75583.143 | 142560 | 12.906 | 11.902 | 1.136 | H1-1b* |
| 97 | 2 | M56 | WT6X15 | .317 | 6.308 | .005 | 0 | y | 75583.143 | 142560 | 12.906 | 11.902 | 1.136 | H1-1a |
| 98 | 2 | M57 | WT6X15 | .058 | 6.07 | .004 | 12.139 | y | 79692.549 | 142560 | 12.906 | 11.902 | 1.136 | H1-1b |
| 99 | 2 | M58 | WT6X15 | .081 | 6.07 | .004 | 12.139 | y | 79692.549 | 142560 | 12.906 | 11.902 | 1.136 | H1-1b |
| 100 | 2 | M59 | WT6X15 | .077 | 0 | .005 | 0 | y | 76397.946 | 142560 | 12.906 | 11.902 | 1.136 | H1-1b* |
| 101 | 2 | M60 | WT6X15 | .178 | 0 | .004 | 0 | y | 76397.946 | 142560 | 12.906 | 11.902 | 1.136 | H1-1b* |
| 102 | 2 | M61 | WT6X15 | .053 | 6.07 | .003 | 12.139 | y | 79692.549 | 142560 | 12.906 | 11.902 | 1.136 | H1-1b |
| 103 | 2 | M62 | WT6X15 | .116 | 6.07 | .004 | 0 | y | 79692.549 | 142560 | 12.906 | 11.902 | 1.136 | H1-1b |

## Member AISC 14th(360-10): LRFD Steel Code Checks (Continued)

| | LC | Member | Shape | UC Max | Loc[ft] | Shear UC | Loc[ft] | Dir | phi*Pnc[lb] | phi*Pnt[lb] | phi*Mnyy... | phi*Mnzz... | Cb | Eqn |
|---|---|---|---|---|---|---|---|---|---|---|---|---|---|---|
| 104 | 2 | M63 | WT6X15 | .131 | 0 | .005 | 12.738 | y | 76397.946 | 142560 | 12.906 | 11.902 | 1.136 | H1-1b* |
| 105 | 2 | M64 | WT6X15 | .354 | 6.236 | .004 | 0 | y | 76397.946 | 142560 | 12.906 | 11.902 | 1.136 | H1-1a |
| 106 | 2 | M65 | WT6X15 | .042 | 5.741 | .008 | 11.482 | y | 83252.56 | 142560 | 12.906 | 11.902 | 1.136 | H1-1b |
| 107 | 2 | M66 | WT6X15 | .038 | 5.741 | .003 | 0 | y | 83252.56 | 142560 | 12.906 | 11.902 | 1.136 | H1-1b |
| 108 | 2 | M71 | HSS8X4X4 | .009 | 13.5 | .002 | 13.5 | y | 102691.6... | 169776 | 22.14 | 35.91 | 2.381 | H1-1b |
| 109 | 2 | M72 | HSS8X4X4 | .009 | 0 | .002 | 0 | y | 102691.6... | 169776 | 22.14 | 35.91 | 2.381 | H1-1b |
| 110 | 2 | M75 | HSS6X4X4 | .021 | 0 | .003 | 0 | y | 52673.992 | 139320 | 17.415 | 23.031 | 2.381 | H1-1b |
| 111 | 2 | M76 | HSS6X4X4 | .021 | 0 | .003 | 0 | y | 52673.992 | 139320 | 17.415 | 23.031 | 2.381 | H1-1b |
| 112 | 2 | M77 | HSS6X4X4 | .019 | 17.321 | .003 | 17.321 | y | 57728.58 | 139320 | 17.415 | 23.031 | 2.381 | H1-1b |
| 113 | 2 | M76A | L4x4x5/16 w... | .016 | 0 | .001 | 0 | y | 59982.319 | 122790.8... | 5.57 | 9.968 | 1.624 | H2-1 |
| 114 | 2 | M77A | L4x4x5/16 w... | .017 | 0 | .001 | 0 | y | 59982.319 | 122790.8... | 5.57 | 9.968 | 2.436 | H2-1 |
| 115 | 2 | M78 | L4x4x5/16 w... | .061 | 14.72 | .002 | 0 | y | 16644.398 | 122790.8... | 5.57 | 9.968 | 2.305 | H2-1 |
| 116 | 2 | M79 | L4x4x5/16 w... | .052 | 14.72 | .002 | 0 | y | 16644.398 | 122790.8... | 5.57 | 9.968 | 2.198 | H2-1 |
| 117 | 2 | M84 | PIPE_3.0 | .085 | 0 | .022 | 0 | | 28250.611 | 65205 | 5.749 | 5.749 | 1.618 | H1-1b |
| 118 | 2 | M85 | PIPE_3.0 | .089 | 12.5 | .023 | 12.5 | | 28250.611 | 65205 | 5.749 | 5.749 | 1.614 | H1-1b |
| 119 | 2 | M86 | PIPE_3.0 | .119 | 0 | .003 | 0 | | 28250.554 | 65205 | 5.749 | 5.749 | 1.227 | H1-1b |
| 120 | 2 | M87 | HSS4x0.250 | .347 | 0 | .041 | 0 | | 71625.082 | 89424 | 8.937 | 8.937 | 2.177 | H1-1b |
| 121 | 2 | M88 | HSS4x0.250 | .064 | 0 | .006 | 0 | | 71625.341 | 89424 | 8.937 | 8.937 | 1.97 | H1-1b |
| 122 | 2 | M89 | HSS4x0.250 | .348 | 0 | .041 | 0 | | 71625.082 | 89424 | 8.937 | 8.937 | 2.178 | H1-1b |
| 123 | 3 | M1 | W24x68 w1... | .278 | 0 | .047 | 10.292 | y | 1.73781e... | 2.33302e... | 564.878 | 2134.343 | 1.269 | H1-1b |
| 124 | 3 | M2 | W24x68 w1... | .327 | 0 | .048 | 10.094 | y | 1.73781e... | 2.33302e... | 564.878 | 2134.343 | 1.563 | H1-1b |
| 125 | 3 | M3 | W24X68 | .274 | 0 | .052 | 0 | y | 492994.2... | 904500 | 91.875 | 223.902 | 2.983 | H1-1b |
| 126 | 3 | M4 | W24X68 | .543 | 4.4 | .037 | 1.886 | y | 492994.2... | 904500 | 91.875 | 222.073 | 2.959 | H1-1a |
| 127 | 3 | M5 | HSS18x0.500 | .232 | 0 | .032 | 0 | | 687685.7... | 806400 | 375.375 | 375.375 | 2.329 | H1-1b |
| 128 | 3 | M6 | HSS18x0.500 | .064 | 27.708 | .020 | 3.175 | | 696116.0... | 806400 | 375.375 | 375.375 | 2.384 | H1-1b |
| 129 | 3 | M7 | HSS18x0.500 | .370 | 16.91 | .058 | 16.91 | | 690364.7... | 806400 | 375.375 | 375.375 | 1.48 | H1-1b |
| 130 | 3 | M8 | HSS18x0.500 | .227 | 0 | .023 | 0 | | 711671.5... | 806400 | 375.375 | 375.375 | 1.835 | H1-1b |
| 131 | 3 | M29 | L5X5X6 | .065 | 6.822 | .005 | 0 | y | 29906.084 | 118260 | 7.418 | 12.233 | 1.136 | H2-1 |
| 132 | 3 | M30 | L5X5X6 | .065 | 6.822 | .005 | 0 | z | 29906.084 | 118260 | 7.418 | 12.233 | 1.136 | H2-1 |
| 133 | 3 | M31 | L5X5X6 | .056 | 6.822 | .003 | 0 | y | 29906.084 | 118260 | 7.418 | 12.233 | 1.136 | H2-1 |
| 134 | 3 | M32 | L5X5X6 | .056 | 6.822 | .003 | 0 | z | 29906.084 | 118260 | 7.418 | 12.233 | 1.136 | H2-1 |
| 135 | 3 | M33 | L5X5X6 | .057 | 6.822 | .003 | 0 | y | 29906.084 | 118260 | 7.418 | 12.233 | 1.136 | H2-1 |
| 136 | 3 | M34 | L5X5X6 | .057 | 6.822 | .003 | 0 | z | 29906.084 | 118260 | 7.418 | 12.233 | 1.136 | H2-1 |
| 137 | 3 | M35 | L5X5X6 | .062 | 6.822 | .003 | 0 | y | 29906.084 | 118260 | 7.418 | 12.233 | 1.136 | H2-1 |
| 138 | 3 | M36 | L5X5X6 | .062 | 6.822 | .003 | 0 | z | 29906.084 | 118260 | 7.418 | 12.233 | 1.136 | H2-1 |
| 139 | 3 | M37 | L5X5X6 | .061 | 6.822 | .003 | 0 | y | 29906.084 | 118260 | 7.418 | 12.233 | 1.136 | H2-1 |
| 140 | 3 | M38 | L5X5X6 | .061 | 6.822 | .003 | 0 | z | 29906.084 | 118260 | 7.418 | 12.233 | 1.136 | H2-1 |
| 141 | 3 | M39 | L5X5X6 | .176 | 7.613 | .004 | 15.226 | y | 74549.701 | 118260 | 7.418 | 11.768 | 1.136 | H2-1 |
| 142 | 3 | M40 | L5X5X6 | .135 | 7.613 | .003 | 0 | y | 74549.701 | 118260 | 7.418 | 11.768 | 1.136 | H2-1 |
| 143 | 3 | M41 | L5X5X6 | .584 | 7.454 | .003 | 15.226 | y | 24012.917 | 118260 | 7.418 | 11.768 | 1.136 | H2-1 |
| 144 | 3 | M42 | L5X5X6 | .164 | 7.613 | .003 | 15.226 | y | 74549.701 | 118260 | 7.418 | 11.768 | 1.136 | H2-1 |
| 145 | 3 | M43 | L3.5X3.5X5 | .236 | 9.906 | .003 | 19.812 | y | 15754.264 | 68040 | 2.882 | 3.881 | 1.136 | H2-1 |
| 146 | 3 | M44 | L3.5X3.5X5 | .803 | 9.699 | .003 | 0 | y | 15754.264 | 68040 | 2.882 | 3.881 | 1.136 | H2-1 |
| 147 | 3 | M45 | L5x5x3/8 wH... | .227 | 16.185 | .004 | 0 | y | 30839.58 | 170301.5... | 10.651 | 7.793 | 1.136 | H2-1 |
| 148 | 3 | M46 | L5x5x3/8 wH... | .558 | 15.848 | .004 | 0 | y | 30839.58 | 170301.5... | 10.651 | 7.793 | 1.136 | H2-1 |
| 149 | 3 | M47 | WT6X15 | .081 | 6.333 | .005 | 0 | y | 76798.045 | 142560 | 12.906 | 11.902 | 1.136 | H1-1b |
| 150 | 3 | M48 | WT6X15 | .721 | 0 | .015 | 0 | y | 76798.045 | 142560 | 12.906 | 7.439 | 2.45 | H1-1a |
| 151 | 3 | M49 | WT6X15 | .275 | 5.922 | .005 | 0 | y | 79928.999 | 142560 | 12.906 | 11.902 | 1.136 | H1-1a |
| 152 | 3 | M50 | WT6X15 | .289 | 6.048 | .006 | 0 | y | 79928.999 | 142560 | 12.906 | 11.902 | 1.136 | H1-1a |
| 153 | 3 | M51 | WT6X15 | .051 | 0 | .004 | 0 | y | 76128.484 | 142560 | 12.906 | 11.902 | 1.136 | H1-1b* |
| 154 | 3 | M52 | WT6X15 | .282 | 6.26 | .005 | 0 | y | 76128.484 | 142560 | 12.906 | 11.902 | 1.136 | H1-1a |
| 155 | 3 | M53 | WT6X15 | .045 | 6.005 | .004 | 12.011 | y | 80394.207 | 142560 | 12.906 | 11.902 | 1.136 | H1-1b |

## Member AISC 14th(360-10): LRFD Steel Code Checks (Continued)

| | LC | Member | Shape | UC Max | Loc[ft] | Shear UC | Loc[ft] | Dir | phi*Pnc[lb] | phi*Pnt[lb] | phi*Mnyy... | phi*Mnzz... | Cb | Eqn |
|---|---|---|---|---|---|---|---|---|---|---|---|---|---|---|
| 156 | 3 | M54 | WT6X15 | .073 | 6.005 | .004 | 0 | y | 80394.207 | 142560 | 12.906 | 11.902 | 1.136 | H1-1b |
| 157 | 3 | M55 | WT6X15 | .027 | 6.443 | .005 | 0 | y | 75583.143 | 142560 | 12.906 | 11.902 | 1.136 | H1-1b |
| 158 | 3 | M56 | WT6X15 | .278 | 6.308 | .006 | 12.885 | y | 75583.143 | 142560 | 12.906 | 11.902 | 1.136 | H1-1a |
| 159 | 3 | M57 | WT6X15 | .031 | 6.07 | .004 | 12.139 | y | 79692.549 | 142560 | 12.906 | 11.902 | 1.136 | H1-1b |
| 160 | 3 | M58 | WT6X15 | .070 | 6.07 | .005 | 0 | y | 79692.549 | 142560 | 12.906 | 11.902 | 1.136 | H1-1b |
| 161 | 3 | M59 | WT6X15 | .028 | 6.369 | .006 | 0 | y | 76397.946 | 142560 | 12.906 | 11.902 | 1.136 | H1-1b |
| 162 | 3 | M60 | WT6X15 | .158 | 0 | .005 | 12.738 | y | 76397.946 | 142560 | 12.906 | 11.902 | 1.136 | H1-1b* |
| 163 | 3 | M61 | WT6X15 | .060 | 0 | .004 | 0 | y | 79692.549 | 142560 | 12.906 | 11.902 | 1.136 | H1-1b* |
| 164 | 3 | M62 | WT6X15 | .115 | 6.07 | .005 | 0 | y | 79692.549 | 142560 | 12.906 | 11.902 | 1.136 | H1-1b |
| 165 | 3 | M63 | WT6X15 | .033 | 6.369 | .005 | 0 | y | 76397.946 | 142560 | 12.906 | 11.902 | 1.136 | H1-1b |
| 166 | 3 | M64 | WT6X15 | .336 | 6.236 | .003 | 0 | y | 76397.946 | 142560 | 12.906 | 11.902 | 1.136 | H1-1a |
| 167 | 3 | M65 | WT6X15 | .036 | 5.741 | .009 | 0 | y | 83252.56 | 142560 | 12.906 | 11.902 | 1.136 | H1-1b |
| 168 | 3 | M66 | WT6X15 | .028 | 5.741 | .006 | 11.482 | y | 83252.56 | 142560 | 12.906 | 11.902 | 1.136 | H1-1b |
| 169 | 3 | M71 | HSS8X4X4 | .009 | 13.5 | .002 | 13.5 | y | 102691.6... | 169776 | 22.14 | 35.91 | 2.382 | H1-1b |
| 170 | 3 | M72 | HSS8X4X4 | .009 | 0 | .002 | 0 | y | 102691.6... | 169776 | 22.14 | 35.91 | 2.381 | H1-1b |
| 171 | 3 | M75 | HSS6X4X4 | .021 | 0 | .003 | 0 | y | 52673.992 | 139320 | 17.415 | 23.031 | 2.381 | H1-1b |
| 172 | 3 | M76 | HSS6X4X4 | .021 | 0 | .003 | 0 | y | 52673.992 | 139320 | 17.415 | 23.031 | 2.381 | H1-1b |
| 173 | 3 | M77 | HSS6X4X4 | .019 | 17.321 | .003 | 17.321 | y | 57728.58 | 139320 | 17.415 | 23.031 | 2.381 | H1-1b |
| 174 | 3 | M76A | L4x4x5/16 w... | .019 | 7.571 | .001 | 0 | y | 59982.319 | 122790.8... | 5.57 | 9.968 | 1.434 | H2-1 |
| 175 | 3 | M77A | L4x4x5/16 w... | .018 | 0 | .001 | 0 | y | 59982.319 | 122790.8... | 5.57 | 9.968 | 2.163 | H2-1 |
| 176 | 3 | M78 | L4x4x5/16 w... | .073 | 14.72 | .002 | 0 | y | 16644.398 | 122790.8... | 5.57 | 9.968 | 2.252 | H2-1 |
| 177 | 3 | M79 | L4x4x5/16 w... | .053 | 14.72 | .002 | 14.72 | y | 16644.398 | 122790.8... | 5.57 | 9.968 | 2.244 | H2-1 |
| 178 | 3 | M84 | PIPE_3.0 | .092 | 0 | .022 | 0 | | 28250.611 | 65205 | 5.749 | 5.749 | 1.612 | H1-1b |
| 179 | 3 | M85 | PIPE_3.0 | .091 | 12.5 | .023 | 12.5 | | 28250.611 | 65205 | 5.749 | 5.749 | 1.606 | H1-1b |
| 180 | 3 | M86 | PIPE_3.0 | .115 | 0 | .003 | 0 | | 28250.554 | 65205 | 5.749 | 5.749 | 1.228 | H1-1b |
| 181 | 3 | M87 | HSS4x0.250 | .358 | 0 | .042 | 0 | | 71625.082 | 89424 | 8.937 | 8.937 | 2.177 | H1-1b |
| 182 | 3 | M88 | HSS4x0.250 | .087 | 0 | .007 | 0 | | 71625.341 | 89424 | 8.937 | 8.937 | 1.981 | H1-1b |
| 183 | 3 | M89 | HSS4x0.250 | .353 | 0 | .042 | 0 | | 71625.082 | 89424 | 8.937 | 8.937 | 2.178 | H1-1b |
| 184 | 4 | M1 | W24x68 w1... | .304 | 0 | .045 | 19 | y | 1.73781e... | 2.33302e... | 564.878 | 2134.343 | 1.187 | H1-1b |
| 185 | 4 | M2 | W24x68 w1... | .329 | 0 | .045 | 19 | y | 1.73781e... | 2.33302e... | 564.878 | 2134.343 | 1.195 | H1-1b |
| 186 | 4 | M3 | W24X68 | .279 | 0 | .052 | 1.886 | y | 492994.2... | 904500 | 91.875 | 245.091 | 3.266 | H1-1b |
| 187 | 4 | M4 | W24X68 | .484 | 4.4 | .052 | 1.886 | y | 492994.2... | 904500 | 91.875 | 247.165 | 3.293 | H1-1a |
| 188 | 4 | M5 | HSS18x0.500 | .210 | 0 | .036 | 0 | | 687685.7... | 806400 | 375.375 | 375.375 | 2.328 | H1-1b |
| 189 | 4 | M6 | HSS18x0.500 | .052 | 27.708 | .022 | 3.175 | | 696116.0... | 806400 | 375.375 | 375.375 | 2.384 | H1-1b |
| 190 | 4 | M7 | HSS18x0.500 | .358 | 16.91 | .058 | 16.91 | | 690364.7... | 806400 | 375.375 | 375.375 | 1.48 | H1-1b |
| 191 | 4 | M8 | HSS18x0.500 | .217 | 0 | .024 | 0 | | 711671.5... | 806400 | 375.375 | 375.375 | 1.835 | H1-1b |
| 192 | 4 | M29 | L5X5X6 | .055 | 6.822 | .005 | 0 | y | 29906.084 | 118260 | 7.418 | 12.233 | 1.136 | H2-1 |
| 193 | 4 | M30 | L5X5X6 | .054 | 6.822 | .005 | 0 | z | 29906.084 | 118260 | 7.418 | 12.233 | 1.136 | H2-1 |
| 194 | 4 | M31 | L5X5X6 | .055 | 6.822 | .003 | 0 | y | 29906.084 | 118260 | 7.418 | 12.233 | 1.136 | H2-1 |
| 195 | 4 | M32 | L5X5X6 | .055 | 6.822 | .003 | 0 | z | 29906.084 | 118260 | 7.418 | 12.233 | 1.136 | H2-1 |
| 196 | 4 | M33 | L5X5X6 | .055 | 6.822 | .003 | 0 | y | 29906.084 | 118260 | 7.418 | 12.233 | 1.136 | H2-1 |
| 197 | 4 | M34 | L5X5X6 | .055 | 6.822 | .003 | 0 | z | 29906.084 | 118260 | 7.418 | 12.233 | 1.136 | H2-1 |
| 198 | 4 | M35 | L5X5X6 | .056 | 6.822 | .003 | 0 | y | 29906.084 | 118260 | 7.418 | 12.233 | 1.136 | H2-1 |
| 199 | 4 | M36 | L5X5X6 | .056 | 6.822 | .003 | 0 | z | 29906.084 | 118260 | 7.418 | 12.233 | 1.136 | H2-1 |
| 200 | 4 | M37 | L5X5X6 | .053 | 6.822 | .003 | 0 | y | 29906.084 | 118260 | 7.418 | 12.233 | 1.136 | H2-1 |
| 201 | 4 | M38 | L5X5X6 | .053 | 6.822 | .003 | 0 | z | 29906.084 | 118260 | 7.418 | 12.233 | 1.136 | H2-1 |
| 202 | 4 | M39 | L5X5X6 | .198 | 7.613 | .004 | 15.226 | y | 74549.701 | 118260 | 7.418 | 11.768 | 1.136 | H2-1 |
| 203 | 4 | M40 | L5X5X6 | .145 | 7.613 | .003 | 0 | y | 74549.701 | 118260 | 7.418 | 11.768 | 1.136 | H2-1 |
| 204 | 4 | M41 | L5X5X6 | .663 | 7.454 | .003 | 15.226 | y | 24012.917 | 118260 | 7.418 | 11.768 | 1.136 | H2-1 |
| 205 | 4 | M42 | L5X5X6 | .181 | 7.613 | .003 | 15.226 | y | 74549.701 | 118260 | 7.418 | 11.768 | 1.136 | H2-1 |
| 206 | 4 | M43 | L3.5X3.5X5 | .274 | 9.906 | .003 | 0 | y | 15754.264 | 68040 | 2.882 | 3.881 | 1.136 | H2-1 |
| 207 | 4 | M44 | L3.5X3.5X5 | .834 | 9.699 | .003 | 19.812 | y | 15754.264 | 68040 | 2.882 | 3.881 | 1.136 | H2-1 |

## Member AISC 14th(360-10): LRFD Steel Code Checks (Continued)

| | LC | Member | Shape | UC Max | Loc[ft] | Shear UC | Loc[ft] | Dir | phi*Pnc[lb] | phi*Pnt[lb] | phi*Mnyy... | phi*Mnzz... | Cb | Eqn |
|---|---|---|---|---|---|---|---|---|---|---|---|---|---|---|
| 208 | 4 | M45 | L5x5x3/8 wH... | .243 | 16.185 | .004 | 0 | y | 30839.58 | 170301.5... | 10.651 | 7.793 | 1.136 | H2-1 |
| 209 | 4 | M46 | L5x5x3/8 wH... | .572 | 15.848 | .004 | 32.37 | y | 30839.58 | 170301.5... | 10.651 | 7.793 | 1.136 | H2-1 |
| 210 | 4 | M47 | WT6X15 | .124 | 6.333 | .005 | 0 | y | 76798.045 | 142560 | 12.906 | 11.902 | 1.136 | H1-1b |
| 211 | 4 | M48 | WT6X15 | .652 | 0 | .015 | 0 | y | 76798.045 | 142560 | 12.906 | 7.439 | 2.445 | H1-1a |
| 212 | 4 | M49 | WT6X15 | .438 | 5.922 | .005 | 12.096 | y | 79928.999 | 142560 | 12.906 | 11.902 | 1.136 | H1-1a |
| 213 | 4 | M50 | WT6X15 | .258 | 6.048 | .006 | 0 | y | 79928.999 | 142560 | 12.906 | 11.902 | 1.136 | H1-1a |
| 214 | 4 | M51 | WT6X15 | .056 | 6.393 | .004 | 0 | y | 76128.484 | 142560 | 12.906 | 11.902 | 1.136 | H1-1b |
| 215 | 4 | M52 | WT6X15 | .124 | 0 | .005 | 12.787 | y | 76128.484 | 142560 | 12.906 | 11.902 | 1.136 | H1-1b* |
| 216 | 4 | M53 | WT6X15 | .051 | 0 | .004 | 0 | y | 80394.207 | 142560 | 12.906 | 11.902 | 1.136 | H1-1b* |
| 217 | 4 | M54 | WT6X15 | .040 | 6.005 | .004 | 12.011 | y | 80394.207 | 142560 | 12.906 | 11.902 | 1.136 | H1-1b |
| 218 | 4 | M55 | WT6X15 | .061 | 6.443 | .005 | 0 | y | 75583.143 | 142560 | 12.906 | 11.902 | 1.136 | H1-1b |
| 219 | 4 | M56 | WT6X15 | .151 | 0 | .006 | 12.885 | y | 75583.143 | 142560 | 12.906 | 11.902 | 1.136 | H1-1b* |
| 220 | 4 | M57 | WT6X15 | .075 | 0 | .005 | 12.139 | y | 79692.549 | 142560 | 12.906 | 11.902 | 1.136 | H1-1b* |
| 221 | 4 | M58 | WT6X15 | .046 | 6.07 | .005 | 0 | y | 79692.549 | 142560 | 12.906 | 11.902 | 1.136 | H1-1b |
| 222 | 4 | M59 | WT6X15 | .051 | 6.369 | .006 | 0 | y | 76397.946 | 142560 | 12.906 | 11.902 | 1.136 | H1-1b |
| 223 | 4 | M60 | WT6X15 | .094 | 0 | .006 | 12.738 | y | 76397.946 | 142560 | 12.906 | 11.902 | 1.136 | H1-1b* |
| 224 | 4 | M61 | WT6X15 | .224 | 5.943 | .004 | 0 | y | 79692.549 | 142560 | 12.906 | 11.902 | 1.136 | H1-1a |
| 225 | 4 | M62 | WT6X15 | .090 | 6.07 | .005 | 12.139 | y | 79692.549 | 142560 | 12.906 | 11.902 | 1.136 | H1-1b |
| 226 | 4 | M63 | WT6X15 | .072 | 6.369 | .004 | 12.738 | y | 76397.946 | 142560 | 12.906 | 11.902 | 1.136 | H1-1b |
| 227 | 4 | M64 | WT6X15 | .238 | 6.236 | .004 | 12.738 | y | 76397.946 | 142560 | 12.906 | 11.902 | 1.136 | H1-1a |
| 228 | 4 | M65 | WT6X15 | .027 | 5.741 | .008 | 11.482 | y | 83252.56 | 142560 | 12.906 | 11.902 | 1.136 | H1-1b |
| 229 | 4 | M66 | WT6X15 | .033 | 5.741 | .008 | 11.482 | y | 83252.56 | 142560 | 12.906 | 11.902 | 1.136 | H1-1b |
| 230 | 4 | M71 | HSS8X4X4 | .009 | 13.5 | .002 | 13.5 | y | 102691.6... | 169776 | 22.14 | 35.91 | 2.382 | H1-1b |
| 231 | 4 | M72 | HSS8X4X4 | .009 | 0 | .002 | 0 | y | 102691.6... | 169776 | 22.14 | 35.91 | 2.381 | H1-1b |
| 232 | 4 | M75 | HSS6X4X4 | .021 | 0 | .003 | 0 | y | 52673.992 | 139320 | 17.415 | 23.031 | 2.381 | H1-1b |
| 233 | 4 | M76 | HSS6X4X4 | .021 | 0 | .003 | 0 | y | 52673.992 | 139320 | 17.415 | 23.031 | 2.381 | H1-1b |
| 234 | 4 | M77 | HSS6X4X4 | .019 | 17.321 | .003 | 17.321 | y | 57728.58 | 139320 | 17.415 | 23.031 | 2.381 | H1-1b |
| 235 | 4 | M76A | L4x4x5/16 w... | .021 | 7.571 | .001 | 0 | y | 59982.319 | 122790.8... | 5.57 | 9.968 | 1.408 | H2-1 |
| 236 | 4 | M77A | L4x4x5/16 w... | .020 | 7.571 | .001 | 0 | y | 59982.319 | 122790.8... | 5.57 | 9.968 | 1.926 | H2-1 |
| 237 | 4 | M78 | L4x4x5/16 w... | .084 | 14.72 | .002 | 14.72 | y | 16644.398 | 122790.8... | 5.57 | 9.968 | 2.247 | H2-1 |
| 238 | 4 | M79 | L4x4x5/16 w... | .059 | 14.72 | .002 | 14.72 | y | 16644.398 | 122790.8... | 5.57 | 9.968 | 2.423 | H2-1 |
| 239 | 4 | M84 | PIPE_3.0 | .097 | 0 | .022 | 0 | | 28250.611 | 65205 | 5.749 | 5.749 | 1.604 | H1-1b |
| 240 | 4 | M85 | PIPE_3.0 | .091 | 12.5 | .023 | 12.5 | | 28250.611 | 65205 | 5.749 | 5.749 | 1.598 | H1-1b |
| 241 | 4 | M86 | PIPE_3.0 | .110 | 0 | .003 | 0 | | 28250.554 | 65205 | 5.749 | 5.749 | 1.227 | H1-1b |
| 242 | 4 | M87 | HSS4x0.250 | .365 | 0 | .042 | 0 | | 71625.082 | 89424 | 8.937 | 8.937 | 2.177 | H1-1b |
| 243 | 4 | M88 | HSS4x0.250 | .093 | 0 | .008 | 0 | | 71625.341 | 89424 | 8.937 | 8.937 | 1.991 | H1-1b |
| 244 | 4 | M89 | HSS4x0.250 | .356 | 0 | .042 | 0 | | 71625.082 | 89424 | 8.937 | 8.937 | 2.178 | H1-1b |
| 245 | 5 | M1 | W24x68 w1... | .296 | 0 | .043 | 1.583 | y | 1.73781e... | 2.33302e... | 564.878 | 2134.343 | 1.562 | H1-1b |
| 246 | 5 | M2 | W24x68 w1... | .295 | 0 | .047 | 10.292 | y | 1.73781e... | 2.33302e... | 564.878 | 2134.343 | 1.255 | H1-1b |
| 247 | 5 | M3 | W24X68 | .235 | 0 | .039 | 1.886 | y | 492994.2... | 904500 | 91.875 | 507.447 | 1 | H1-1b |
| 248 | 5 | M4 | W24X68 | .314 | 5.028 | .053 | 0 | y | 492994.2... | 904500 | 91.875 | 242.325 | 3.229 | H1-1b |
| 249 | 5 | M5 | HSS18x0.500 | .256 | 0 | .031 | 0 | | 687685.7... | 806400 | 375.375 | 375.375 | 2.327 | H1-1b |
| 250 | 5 | M6 | HSS18x0.500 | .115 | 0 | .020 | 3.175 | | 696116.0... | 806400 | 375.375 | 375.375 | 2.381 | H1-1b* |
| 251 | 5 | M7 | HSS18x0.500 | .335 | 16.91 | .052 | 16.91 | | 690364.7... | 806400 | 375.375 | 375.375 | 1.48 | H1-1b |
| 252 | 5 | M8 | HSS18x0.500 | .194 | 0 | .021 | 0 | | 711671.5... | 806400 | 375.375 | 375.375 | 1.835 | H1-1b |
| 253 | 5 | M29 | L5X5X6 | .089 | 6.822 | .005 | 0 | y | 29906.084 | 118260 | 7.418 | 12.233 | 1.136 | H2-1 |
| 254 | 5 | M30 | L5X5X6 | .092 | 6.822 | .005 | 0 | z | 29906.084 | 118260 | 7.418 | 12.233 | 1.136 | H2-1 |
| 255 | 5 | M31 | L5X5X6 | .054 | 6.822 | .003 | 0 | y | 29906.084 | 118260 | 7.418 | 12.233 | 1.136 | H2-1 |
| 256 | 5 | M32 | L5X5X6 | .054 | 6.822 | .003 | 0 | z | 29906.084 | 118260 | 7.418 | 12.233 | 1.136 | H2-1 |
| 257 | 5 | M33 | L5X5X6 | .054 | 6.822 | .003 | 0 | y | 29906.084 | 118260 | 7.418 | 12.233 | 1.136 | H2-1 |
| 258 | 5 | M34 | L5X5X6 | .054 | 6.822 | .003 | 0 | z | 29906.084 | 118260 | 7.418 | 12.233 | 1.136 | H2-1 |
| 259 | 5 | M35 | L5X5X6 | .054 | 6.822 | .003 | 0 | y | 29906.084 | 118260 | 7.418 | 12.233 | 1.136 | H2-1 |

## Member AISC 14th(360-10): LRFD Steel Code Checks (Continued)

| | LC | Member | Shape | UC Max | Loc[ft] | Shear UC | Loc[ft] | Dir | phi*Pnc[lb] | phi*Pnt[lb] | phi*Mnyy... | phi*Mnzz... | Cb | Eqn |
|---|---|---|---|---|---|---|---|---|---|---|---|---|---|---|
| 260 | 5 | M36 | L5X5X6 | .054 | 6.822 | .003 | 0 | z | 29906.084 | 118260 | 7.418 | 12.233 | 1.136 | H2-1 |
| 261 | 5 | M37 | L5X5X6 | .056 | 6.822 | .003 | 0 | y | 29906.084 | 118260 | 7.418 | 12.233 | 1.136 | H2-1 |
| 262 | 5 | M38 | L5X5X6 | .056 | 6.822 | .003 | 0 | z | 29906.084 | 118260 | 7.418 | 12.233 | 1.136 | H2-1 |
| 263 | 5 | M39 | L5X5X6 | .184 | 7.613 | .004 | 15.226 | y | 74549.701 | 118260 | 7.418 | 11.768 | 1.136 | H2-1 |
| 264 | 5 | M40 | L5X5X6 | .133 | 7.613 | .003 | 15.226 | y | 74549.701 | 118260 | 7.418 | 11.768 | 1.136 | H2-1 |
| 265 | 5 | M41 | L5X5X6 | .583 | 7.454 | .003 | 15.226 | y | 24012.917 | 118260 | 7.418 | 11.768 | 1.136 | H2-1 |
| 266 | 5 | M42 | L5X5X6 | .167 | 7.613 | .003 | 15.226 | y | 74549.701 | 118260 | 7.418 | 11.768 | 1.136 | H2-1 |
| 267 | 5 | M43 | L3.5X3.5X5 | .270 | 9.906 | .003 | 0 | y | 15754.264 | 68040 | 2.882 | 3.881 | 1.136 | H2-1 |
| 268 | 5 | M44 | L3.5X3.5X5 | .686 | 9.699 | .003 | 19.812 | y | 15754.264 | 68040 | 2.882 | 3.881 | 1.136 | H2-1 |
| 269 | 5 | M45 | L5x5x3/8 wH... | .243 | 16.185 | .004 | 32.37 | y | 30839.58 | 170301.5... | 10.651 | 7.793 | 1.136 | H2-1 |
| 270 | 5 | M46 | L5x5x3/8 wH... | .492 | 15.848 | .004 | 32.37 | y | 30839.58 | 170301.5... | 10.651 | 7.793 | 1.136 | H2-1 |
| 271 | 5 | M47 | WT6X15 | .253 | 6.465 | .005 | 12.666 | y | 76798.045 | 142560 | 12.906 | 11.902 | 1.136 | H1-1a |
| 272 | 5 | M48 | WT6X15 | .422 | 0 | .012 | 0 | y | 76798.045 | 142560 | 12.906 | 7.439 | 2.512 | H1-1a |
| 273 | 5 | M49 | WT6X15 | .490 | 5.922 | .005 | 12.096 | y | 79928.999 | 142560 | 12.906 | 11.902 | 1.136 | H1-1a |
| 274 | 5 | M50 | WT6X15 | .096 | 6.048 | .005 | 12.096 | y | 79928.999 | 142560 | 12.906 | 11.902 | 1.136 | H1-1b |
| 275 | 5 | M51 | WT6X15 | .091 | 6.393 | .004 | 0 | y | 76128.484 | 142560 | 12.906 | 11.902 | 1.136 | H1-1b |
| 276 | 5 | M52 | WT6X15 | .037 | 6.393 | .005 | 0 | y | 76128.484 | 142560 | 12.906 | 11.902 | 1.136 | H1-1b |
| 277 | 5 | M53 | WT6X15 | .164 | 0 | .004 | 12.011 | y | 80394.207 | 142560 | 12.906 | 11.902 | 1.136 | H1-1b* |
| 278 | 5 | M54 | WT6X15 | .070 | 0 | .004 | 12.011 | y | 80394.207 | 142560 | 12.906 | 11.902 | 1.136 | H1-1b* |
| 279 | 5 | M55 | WT6X15 | .088 | 6.443 | .005 | 0 | y | 75583.143 | 142560 | 12.906 | 11.902 | 1.136 | H1-1b |
| 280 | 5 | M56 | WT6X15 | .028 | 6.443 | .005 | 12.885 | y | 75583.143 | 142560 | 12.906 | 11.902 | 1.136 | H1-1b |
| 281 | 5 | M57 | WT6X15 | .156 | 0 | .004 | 12.139 | y | 79692.549 | 142560 | 12.906 | 11.902 | 1.136 | H1-1b* |
| 282 | 5 | M58 | WT6X15 | .036 | 6.07 | .005 | 12.139 | y | 79692.549 | 142560 | 12.906 | 11.902 | 1.136 | H1-1b |
| 283 | 5 | M59 | WT6X15 | .067 | 6.369 | .005 | 12.738 | y | 76397.946 | 142560 | 12.906 | 11.902 | 1.136 | H1-1b |
| 284 | 5 | M60 | WT6X15 | .027 | 6.369 | .006 | 12.738 | y | 76397.946 | 142560 | 12.906 | 11.902 | 1.136 | H1-1b |
| 285 | 5 | M61 | WT6X15 | .309 | 5.943 | .004 | 12.139 | y | 79692.549 | 142560 | 12.906 | 11.902 | 1.136 | H1-1a |
| 286 | 5 | M62 | WT6X15 | .049 | 6.07 | .004 | 0 | y | 79692.549 | 142560 | 12.906 | 11.902 | 1.136 | H1-1b |
| 287 | 5 | M63 | WT6X15 | .098 | 6.369 | .003 | 0 | y | 76397.946 | 142560 | 12.906 | 11.902 | 1.136 | H1-1b |
| 288 | 5 | M64 | WT6X15 | .067 | 0 | .004 | 12.738 | y | 76397.946 | 142560 | 12.906 | 11.902 | 1.136 | H1-1b* |
| 289 | 5 | M65 | WT6X15 | .033 | 5.741 | .007 | 11.482 | y | 83252.56 | 142560 | 12.906 | 11.902 | 1.136 | H1-1b |
| 290 | 5 | M66 | WT6X15 | .056 | 0 | .008 | 0 | y | 83252.56 | 142560 | 12.906 | 11.902 | 1.136 | H1-1b* |
| 291 | 5 | M71 | HSS8X4X4 | .009 | 13.5 | .002 | 13.5 | y | 102691.6... | 169776 | 22.14 | 35.91 | 2.381 | H1-1b |
| 292 | 5 | M72 | HSS8X4X4 | .009 | 0 | .002 | 0 | y | 102691.6... | 169776 | 22.14 | 35.91 | 2.381 | H1-1b |
| 293 | 5 | M75 | HSS6X4X4 | .021 | 0 | .003 | 0 | y | 52673.992 | 139320 | 17.415 | 23.031 | 2.381 | H1-1b |
| 294 | 5 | M76 | HSS6X4X4 | .021 | 0 | .003 | 0 | y | 52673.992 | 139320 | 17.415 | 23.031 | 2.381 | H1-1b |
| 295 | 5 | M77 | HSS6X4X4 | .019 | 17.321 | .003 | 17.321 | y | 57728.58 | 139320 | 17.415 | 23.031 | 2.381 | H1-1b |
| 296 | 5 | M76A | L4x4x5/16 w... | .018 | 7.571 | .001 | 0 | y | 59982.319 | 122790.8... | 5.57 | 9.968 | 1.377 | H2-1 |
| 297 | 5 | M77A | L4x4x5/16 w... | .018 | 7.571 | .001 | 0 | y | 59982.319 | 122790.8... | 5.57 | 9.968 | 1.442 | H2-1 |
| 298 | 5 | M78 | L4x4x5/16 w... | .092 | 14.72 | .002 | 14.72 | y | 16644.398 | 122790.8... | 5.57 | 9.968 | 2.289 | H2-1 |
| 299 | 5 | M79 | L4x4x5/16 w... | .068 | 14.72 | .002 | 14.72 | y | 16644.398 | 122790.8... | 5.57 | 9.968 | 2.61 | H2-1 |
| 300 | 5 | M84 | PIPE_3.0 | .099 | 0 | .022 | 0 | | 28250.611 | 65205 | 5.749 | 5.749 | 1.599 | H1-1b |
| 301 | 5 | M85 | PIPE_3.0 | .090 | 12.5 | .023 | 12.5 | | 28250.611 | 65205 | 5.749 | 5.749 | 1.594 | H1-1b |
| 302 | 5 | M86 | PIPE_3.0 | .112 | 0 | .003 | 0 | | 28250.554 | 65205 | 5.749 | 5.749 | 1.224 | H1-1b |
| 303 | 5 | M87 | HSS4x0.250 | .365 | 0 | .042 | 0 | | 71625.082 | 89424 | 8.937 | 8.937 | 2.177 | H1-1b |
| 304 | 5 | M88 | HSS4x0.250 | .083 | 0 | .007 | 0 | | 71625.341 | 89424 | 8.937 | 8.937 | 1.995 | H1-1b |
| 305 | 5 | M89 | HSS4x0.250 | .355 | 0 | .042 | 0 | | 71625.082 | 89424 | 8.937 | 8.937 | 2.178 | H1-1b |
| 306 | 6 | M1 | W24x68 w1... | .275 | 0 | .057 | 0 | y | 1.73781e... | 2.33302e... | 564.878 | 2134.343 | 2.91 | H1-1b |
| 307 | 6 | M2 | W24x68 w1... | .184 | 0 | .040 | .396 | y | 1.73781e... | 2.33302e... | 564.878 | 2134.343 | 1.566 | H1-1b |
| 308 | 6 | M3 | W24X68 | .198 | 0 | .017 | 1.886 | z | 492994.2... | 904500 | 91.875 | 507.447 | 1 | H1-1b |
| 309 | 6 | M4 | W24X68 | .139 | 1.886 | .040 | 0 | y | 492994.2... | 904500 | 91.875 | 507.447 | 1 | H1-1b |
| 310 | 6 | M5 | HSS18x0.500 | .363 | 0 | .021 | 0 | | 687685.7... | 806400 | 375.375 | 375.375 | 2.325 | H1-1a |
| 311 | 6 | M6 | HSS18x0.500 | .191 | 0 | .014 | 17.318 | | 696116.0... | 806400 | 375.375 | 375.375 | 2.37 | H1-1b* |

## Member AISC 14th(360-10): LRFD Steel Code Checks (Continued)

| | LC | Member | Shape | UC Max | Loc[ft] | Shear UC | Loc[ft] | Dir | phi*Pnc[lb] | phi*Pnt[lb] | phi*Mnyy... | phi*Mnzz... | Cb | Eqn |
|---|---|---|---|---|---|---|---|---|---|---|---|---|---|---|
| 312 | 6 | M7 | HSS18x0.500 | .295 | 16.91 | .043 | 16.91 | | 690364.7... | 806400 | 375.375 | 375.375 | 1.479 | H1-1b |
| 313 | 6 | M8 | HSS18x0.500 | .166 | 0 | .017 | 0 | | 711671.5... | 806400 | 375.375 | 375.375 | 1.835 | H1-1b |
| 314 | 6 | M29 | L5X5X6 | .122 | 6.822 | .004 | 0 | y | 29906.084 | 118260 | 7.418 | 12.233 | 1.136 | H2-1 |
| 315 | 6 | M30 | L5X5X6 | .123 | 6.822 | .004 | 0 | z | 29906.084 | 118260 | 7.418 | 12.233 | 1.136 | H2-1 |
| 316 | 6 | M31 | L5X5X6 | .053 | 6.822 | .003 | 0 | y | 29906.084 | 118260 | 7.418 | 12.233 | 1.136 | H2-1 |
| 317 | 6 | M32 | L5X5X6 | .053 | 6.822 | .003 | 0 | z | 29906.084 | 118260 | 7.418 | 12.233 | 1.136 | H2-1 |
| 318 | 6 | M33 | L5X5X6 | .053 | 6.822 | .003 | 0 | y | 29906.084 | 118260 | 7.418 | 12.233 | 1.136 | H2-1 |
| 319 | 6 | M34 | L5X5X6 | .053 | 6.822 | .003 | 0 | z | 29906.084 | 118260 | 7.418 | 12.233 | 1.136 | H2-1 |
| 320 | 6 | M35 | L5X5X6 | .055 | 6.822 | .003 | 0 | y | 29906.084 | 118260 | 7.418 | 12.233 | 1.136 | H2-1 |
| 321 | 6 | M36 | L5X5X6 | .055 | 6.822 | .003 | 0 | z | 29906.084 | 118260 | 7.418 | 12.233 | 1.136 | H2-1 |
| 322 | 6 | M37 | L5X5X6 | .057 | 6.822 | .003 | 0 | y | 29906.084 | 118260 | 7.418 | 12.233 | 1.136 | H2-1 |
| 323 | 6 | M38 | L5X5X6 | .057 | 6.822 | .003 | 0 | z | 29906.084 | 118260 | 7.418 | 12.233 | 1.136 | H2-1 |
| 324 | 6 | M39 | L5X5X6 | .136 | 7.613 | .003 | 15.226 | y | 74549.701 | 118260 | 7.418 | 11.768 | 1.136 | H2-1 |
| 325 | 6 | M40 | L5X5X6 | .100 | 7.613 | .003 | 0 | y | 74549.701 | 118260 | 7.418 | 11.768 | 1.136 | H2-1 |
| 326 | 6 | M41 | L5X5X6 | .360 | 7.454 | .003 | 0 | y | 24012.917 | 118260 | 7.418 | 11.768 | 1.136 | H2-1 |
| 327 | 6 | M42 | L5X5X6 | .123 | 7.613 | .003 | 15.226 | y | 74549.701 | 118260 | 7.418 | 11.768 | 1.136 | H2-1 |
| 328 | 6 | M43 | L3.5X3.5X5 | .224 | 9.906 | .003 | 19.812 | y | 15754.264 | 68040 | 2.882 | 3.881 | 1.136 | H2-1 |
| 329 | 6 | M44 | L3.5X3.5X5 | .391 | 9.699 | .003 | 19.812 | y | 15754.264 | 68040 | 2.882 | 3.881 | 1.136 | H2-1 |
| 330 | 6 | M45 | L5x5x3/8 wH... | .225 | 16.185 | .004 | 32.37 | y | 30839.58 | 170301.5... | 10.651 | 7.793 | 1.136 | H2-1 |
| 331 | 6 | M46 | L5x5x3/8 wH... | .335 | 15.848 | .004 | 0 | y | 30839.58 | 170301.5... | 10.651 | 7.793 | 1.136 | H2-1 |
| 332 | 6 | M47 | WT6X15 | .222 | 6.465 | .005 | 0 | y | 76798.045 | 142560 | 12.906 | 11.902 | 1.136 | H1-1a |
| 333 | 6 | M48 | WT6X15 | .097 | 0 | .006 | 0 | y | 76798.045 | 142560 | 12.906 | 7.439 | 2.973 | H1-1b |
| 334 | 6 | M49 | WT6X15 | .415 | 5.922 | .004 | 0 | y | 79928.999 | 142560 | 12.906 | 11.902 | 1.136 | H1-1a |
| 335 | 6 | M50 | WT6X15 | .030 | 6.048 | .004 | 0 | y | 79928.999 | 142560 | 12.906 | 11.902 | 1.136 | H1-1b |
| 336 | 6 | M51 | WT6X15 | .109 | 6.393 | .004 | 0 | y | 76128.484 | 142560 | 12.906 | 11.902 | 1.136 | H1-1b |
| 337 | 6 | M52 | WT6X15 | .078 | 6.393 | .004 | 12.787 | y | 76128.484 | 142560 | 12.906 | 11.902 | 1.136 | H1-1b |
| 338 | 6 | M53 | WT6X15 | .251 | 5.88 | .004 | 0 | y | 80394.207 | 142560 | 12.906 | 11.902 | 1.136 | H1-1a |
| 339 | 6 | M54 | WT6X15 | .182 | 0 | .003 | 0 | y | 80394.207 | 142560 | 12.906 | 11.902 | 1.136 | H1-1b* |
| 340 | 6 | M55 | WT6X15 | .098 | 6.443 | .004 | 0 | y | 75583.143 | 142560 | 12.906 | 11.902 | 1.136 | H1-1b |
| 341 | 6 | M56 | WT6X15 | .062 | 6.443 | .004 | 12.885 | y | 75583.143 | 142560 | 12.906 | 11.902 | 1.136 | H1-1b |
| 342 | 6 | M57 | WT6X15 | .196 | 0 | .004 | 12.139 | y | 79692.549 | 142560 | 12.906 | 11.902 | 1.136 | H1-1b* |
| 343 | 6 | M58 | WT6X15 | .124 | 0 | .004 | 0 | y | 79692.549 | 142560 | 12.906 | 11.902 | 1.136 | H1-1b* |
| 344 | 6 | M59 | WT6X15 | .072 | 6.369 | .004 | 0 | y | 76397.946 | 142560 | 12.906 | 11.902 | 1.136 | H1-1b |
| 345 | 6 | M60 | WT6X15 | .048 | 6.369 | .005 | 12.738 | y | 76397.946 | 142560 | 12.906 | 11.902 | 1.136 | H1-1b |
| 346 | 6 | M61 | WT6X15 | .312 | 5.943 | .004 | 0 | y | 79692.549 | 142560 | 12.906 | 11.902 | 1.136 | H1-1a |
| 347 | 6 | M62 | WT6X15 | .077 | 0 | .003 | 12.139 | y | 79692.549 | 142560 | 12.906 | 11.902 | 1.136 | H1-1b* |
| 348 | 6 | M63 | WT6X15 | .103 | 6.369 | .004 | 12.738 | y | 76397.946 | 142560 | 12.906 | 11.902 | 1.136 | H1-1b |
| 349 | 6 | M64 | WT6X15 | .051 | 6.369 | .005 | 0 | y | 76397.946 | 142560 | 12.906 | 11.902 | 1.136 | H1-1b |
| 350 | 6 | M65 | WT6X15 | .054 | 0 | .004 | 0 | y | 83252.56 | 142560 | 12.906 | 11.902 | 1.136 | H1-1b* |
| 351 | 6 | M66 | WT6X15 | .077 | 0 | .007 | 0 | y | 83252.56 | 142560 | 12.906 | 11.902 | 1.136 | H1-1b* |
| 352 | 6 | M71 | HSS8X4X4 | .009 | 13.5 | .002 | 13.5 | y | 102691.6... | 169776 | 22.14 | 35.91 | 2.381 | H1-1b |
| 353 | 6 | M72 | HSS8X4X4 | .009 | 0 | .002 | 0 | y | 102691.6... | 169776 | 22.14 | 35.91 | 2.381 | H1-1b |
| 354 | 6 | M75 | HSS6X4X4 | .021 | 0 | .003 | 0 | y | 52673.992 | 139320 | 17.415 | 23.031 | 2.381 | H1-1b |
| 355 | 6 | M76 | HSS6X4X4 | .021 | 0 | .003 | 0 | y | 52673.992 | 139320 | 17.415 | 23.031 | 2.381 | H1-1b |
| 356 | 6 | M77 | HSS6X4X4 | .019 | 17.321 | .003 | 17.321 | y | 57728.58 | 139320 | 17.415 | 23.031 | 2.381 | H1-1b |
| 357 | 6 | M76A | L4x4x5/16 w... | .014 | 7.571 | .001 | 7.571 | y | 59982.319 | 122790.8... | 5.57 | 9.968 | 1.379 | H2-1 |
| 358 | 6 | M77A | L4x4x5/16 w... | .016 | 7.571 | .001 | 7.571 | y | 59982.319 | 122790.8... | 5.57 | 9.968 | 1.206 | H2-1 |
| 359 | 6 | M78 | L4x4x5/16 w... | .094 | 14.72 | .002 | 14.72 | y | 16644.398 | 122790.8... | 5.57 | 9.968 | 2.37 | H2-1 |
| 360 | 6 | M79 | L4x4x5/16 w... | .079 | 14.72 | .002 | 14.72 | y | 16644.398 | 122790.8... | 5.57 | 9.968 | 2.761 | H2-1 |
| 361 | 6 | M84 | PIPE_3.0 | .096 | 0 | .022 | 0 | | 28250.611 | 65205 | 5.749 | 5.749 | 1.595 | H1-1b |
| 362 | 6 | M85 | PIPE_3.0 | .087 | 12.5 | .023 | 12.5 | | 28250.611 | 65205 | 5.749 | 5.749 | 1.593 | H1-1b |
| 363 | 6 | M86 | PIPE_3.0 | .113 | 0 | .003 | 0 | | 28250.554 | 65205 | 5.749 | 5.749 | 1.221 | H1-1b |

## Member AISC 14th(360-10): LRFD Steel Code Checks (Continued)

| | LC | Member | Shape | UC Max | Loc[ft] | Shear UC | Loc[ft] | Dir | phi*Pnc[lb] | phi*Pnt[lb] | phi*Mnyy... | phi*Mnzz... | Cb | Eqn |
|---|---|---|---|---|---|---|---|---|---|---|---|---|---|---|
| 364 | 6 | M87 | HSS4x0.250 | .359 | 0 | .042 | 0 | | 71625.082 | 89424 | 8.937 | 8.937 | 2.177 | H1-1b |
| 365 | 6 | M88 | HSS4x0.250 | .061 | 0 | .006 | 0 | | 71625.341 | 89424 | 8.937 | 8.937 | 1.994 | H1-1b |
| 366 | 6 | M89 | HSS4x0.250 | .350 | 0 | .042 | 0 | | 71625.082 | 89424 | 8.937 | 8.937 | 2.177 | H1-1b |
| 367 | 7 | M1 | W24x68 w1... | .179 | 0 | .055 | 0 | y | 1.73781e... | 2.33302e... | 564.878 | 2134.343 | 1.931 | H1-1b |
| 368 | 7 | M2 | W24x68 w1... | .181 | 0 | .056 | 0 | y | 1.73781e... | 2.33302e... | 564.878 | 2134.343 | 1.926 | H1-1b |
| 369 | 7 | M3 | W24X68 | .119 | 2.514 | .015 | 0 | y | 492994.2... | 904500 | 91.875 | 507.447 | 1 | H1-1b |
| 370 | 7 | M4 | W24X68 | .121 | 2.514 | .016 | 0 | y | 492994.2... | 904500 | 91.875 | 507.447 | 1 | H1-1b |
| 371 | 7 | M5 | HSS18x0.500 | .369 | 0 | .012 | 0 | | 687685.7... | 806400 | 375.375 | 375.375 | 1.797 | H1-1a |
| 372 | 7 | M6 | HSS18x0.500 | .241 | 3.175 | .010 | 17.318 | | 696116.0... | 806400 | 375.375 | 375.375 | 1.194 | H1-1a |
| 373 | 7 | M7 | HSS18x0.500 | .273 | 16.91 | .037 | 16.91 | | 690364.7... | 806400 | 375.375 | 375.375 | 2.552 | H1-1b |
| 374 | 7 | M8 | HSS18x0.500 | .151 | 0 | .012 | 0 | | 711671.5... | 806400 | 375.375 | 375.375 | 1.664 | H1-1b |
| 375 | 7 | M29 | L5X5X6 | .133 | 6.822 | .003 | 0 | y | 29906.084 | 118260 | 7.418 | 12.233 | 1.136 | H2-1 |
| 376 | 7 | M30 | L5X5X6 | .134 | 6.822 | .003 | 0 | z | 29906.084 | 118260 | 7.418 | 12.233 | 1.136 | H2-1 |
| 377 | 7 | M31 | L5X5X6 | .054 | 6.822 | .003 | 0 | y | 29906.084 | 118260 | 7.418 | 12.233 | 1.136 | H2-1 |
| 378 | 7 | M32 | L5X5X6 | .054 | 6.822 | .003 | 0 | z | 29906.084 | 118260 | 7.418 | 12.233 | 1.136 | H2-1 |
| 379 | 7 | M33 | L5X5X6 | .054 | 6.822 | .003 | 0 | y | 29906.084 | 118260 | 7.418 | 12.233 | 1.136 | H2-1 |
| 380 | 7 | M34 | L5X5X6 | .054 | 6.822 | .003 | 0 | z | 29906.084 | 118260 | 7.418 | 12.233 | 1.136 | H2-1 |
| 381 | 7 | M35 | L5X5X6 | .056 | 6.822 | .003 | 0 | y | 29906.084 | 118260 | 7.418 | 12.233 | 1.136 | H2-1 |
| 382 | 7 | M36 | L5X5X6 | .056 | 6.822 | .003 | 0 | z | 29906.084 | 118260 | 7.418 | 12.233 | 1.136 | H2-1 |
| 383 | 7 | M37 | L5X5X6 | .058 | 6.822 | .003 | 0 | y | 29906.084 | 118260 | 7.418 | 12.233 | 1.136 | H2-1 |
| 384 | 7 | M38 | L5X5X6 | .058 | 6.822 | .003 | 0 | z | 29906.084 | 118260 | 7.418 | 12.233 | 1.136 | H2-1 |
| 385 | 7 | M39 | L5X5X6 | .068 | 7.613 | .003 | 15.226 | y | 74549.701 | 118260 | 7.418 | 11.768 | 1.136 | H2-1 |
| 386 | 7 | M40 | L5X5X6 | .063 | 7.613 | .003 | 0 | y | 74549.701 | 118260 | 7.418 | 11.768 | 1.136 | H2-1 |
| 387 | 7 | M41 | L5X5X6 | .061 | 7.454 | .003 | 0 | y | 24012.917 | 118260 | 7.418 | 11.768 | 1.136 | H2-1 |
| 388 | 7 | M42 | L5X5X6 | .063 | 7.613 | .003 | 0 | y | 74549.701 | 118260 | 7.418 | 11.768 | 1.136 | H2-1 |
| 389 | 7 | M43 | L3.5X3.5X5 | .150 | 9.906 | .003 | 0 | y | 15754.264 | 68040 | 2.882 | 3.881 | 1.136 | H2-1 |
| 390 | 7 | M44 | L3.5X3.5X5 | .143 | 9.906 | .003 | 19.812 | y | 15754.264 | 68040 | 2.882 | 3.881 | 1.136 | H2-1 |
| 391 | 7 | M45 | L5x5x3/8 wH... | .195 | 16.185 | .004 | 0 | y | 30839.58 | 170301.5... | 10.651 | 7.793 | 1.136 | H2-1 |
| 392 | 7 | M46 | L5x5x3/8 wH... | .191 | 16.185 | .004 | 32.37 | y | 30839.58 | 170301.5... | 10.651 | 7.793 | 1.136 | H2-1 |
| 393 | 7 | M47 | WT6X15 | .082 | 6.333 | .003 | 0 | y | 76798.045 | 142560 | 12.906 | 11.902 | 1.136 | H1-1b |
| 394 | 7 | M48 | WT6X15 | .178 | 12.666 | .006 | 12.666 | y | 76798.045 | 142560 | 12.906 | 7.439 | 2.506 | H1-1b |
| 395 | 7 | M49 | WT6X15 | .234 | 5.922 | .003 | 12.096 | y | 79928.999 | 142560 | 12.906 | 11.902 | 1.136 | H1-1a |
| 396 | 7 | M50 | WT6X15 | .235 | 5.922 | .003 | 0 | y | 79928.999 | 142560 | 12.906 | 11.902 | 1.136 | H1-1a |
| 397 | 7 | M51 | WT6X15 | .103 | 6.393 | .003 | 0 | y | 76128.484 | 142560 | 12.906 | 11.902 | 1.136 | H1-1b |
| 398 | 7 | M52 | WT6X15 | .105 | 6.393 | .003 | 12.787 | y | 76128.484 | 142560 | 12.906 | 11.902 | 1.136 | H1-1b |
| 399 | 7 | M53 | WT6X15 | .254 | 5.88 | .003 | 0 | y | 80394.207 | 142560 | 12.906 | 11.902 | 1.136 | H1-1a |
| 400 | 7 | M54 | WT6X15 | .263 | 5.88 | .003 | 12.011 | y | 80394.207 | 142560 | 12.906 | 11.902 | 1.136 | H1-1a |
| 401 | 7 | M55 | WT6X15 | .087 | 6.443 | .003 | 0 | y | 75583.143 | 142560 | 12.906 | 11.902 | 1.136 | H1-1b |
| 402 | 7 | M56 | WT6X15 | .090 | 6.443 | .003 | 12.885 | y | 75583.143 | 142560 | 12.906 | 11.902 | 1.136 | H1-1b |
| 403 | 7 | M57 | WT6X15 | .181 | 0 | .003 | 0 | y | 79692.549 | 142560 | 12.906 | 11.902 | 1.136 | H1-1b* |
| 404 | 7 | M58 | WT6X15 | .188 | 0 | .003 | 0 | y | 79692.549 | 142560 | 12.906 | 11.902 | 1.136 | H1-1b* |
| 405 | 7 | M59 | WT6X15 | .064 | 6.369 | .003 | 12.738 | y | 76397.946 | 142560 | 12.906 | 11.902 | 1.136 | H1-1b |
| 406 | 7 | M60 | WT6X15 | .066 | 6.369 | .003 | 0 | y | 76397.946 | 142560 | 12.906 | 11.902 | 1.136 | H1-1b |
| 407 | 7 | M61 | WT6X15 | .232 | 5.943 | .003 | 12.139 | y | 79692.549 | 142560 | 12.906 | 11.902 | 1.136 | H1-1a |
| 408 | 7 | M62 | WT6X15 | .238 | 5.943 | .003 | 0 | y | 79692.549 | 142560 | 12.906 | 11.902 | 1.136 | H1-1a |
| 409 | 7 | M63 | WT6X15 | .085 | 6.369 | .005 | 12.738 | y | 76397.946 | 142560 | 12.906 | 11.902 | 1.136 | H1-1b |
| 410 | 7 | M64 | WT6X15 | .087 | 6.369 | .004 | 12.738 | y | 76397.946 | 142560 | 12.906 | 11.902 | 1.136 | H1-1b |
| 411 | 7 | M65 | WT6X15 | .073 | 0 | .005 | 0 | y | 83252.56 | 142560 | 12.906 | 11.902 | 1.136 | H1-1b* |
| 412 | 7 | M66 | WT6X15 | .079 | 0 | .005 | 11.482 | y | 83252.56 | 142560 | 12.906 | 11.902 | 1.136 | H1-1b* |
| 413 | 7 | M71 | HSS8X4X4 | .009 | 0 | .002 | 0 | y | 102691.6... | 169776 | 22.14 | 35.91 | 2.381 | H1-1b |
| 414 | 7 | M72 | HSS8X4X4 | .009 | 13.5 | .002 | 13.5 | y | 102691.6... | 169776 | 22.14 | 35.91 | 2.381 | H1-1b |
| 415 | 7 | M75 | HSS6X4X4 | .021 | 18.182 | .003 | 0 | y | 52673.992 | 139320 | 17.415 | 23.031 | 2.381 | H1-1b |

## Member AISC 14th(360-10): LRFD Steel Code Checks (Continued)

| | LC | Member | Shape | UC Max | Loc[ft] | Shear UC | Loc[ft] | Dir | phi*Pnc[lb] | phi*Pnt[lb] | phi*Mnyy... | phi*Mnzz... | Cb | Eqn |
|---|---|---|---|---|---|---|---|---|---|---|---|---|---|---|
| 416 | 7 | M76 | HSS6X4X4 | .021 | 0 | .003 | 18.182 | y | 52673.992 | 139320 | 17.415 | 23.031 | 2.381 | H1-1b |
| 417 | 7 | M77 | HSS6X4X4 | .019 | 0 | .003 | 0 | y | 57728.58 | 139320 | 17.415 | 23.031 | 2.381 | H1-1b |
| 418 | 7 | M76A | L4x4x5/16 w... | .014 | 7.571 | .001 | 7.571 | y | 59982.319 | 122790.8... | 5.57 | 9.968 | 1.579 | H2-1 |
| 419 | 7 | M77A | L4x4x5/16 w... | .018 | 7.571 | .001 | 7.571 | y | 59982.319 | 122790.8... | 5.57 | 9.968 | 1.939 | H2-1 |
| 420 | 7 | M78 | L4x4x5/16 w... | .090 | 14.72 | .002 | 14.72 | y | 16644.398 | 122790.8... | 5.57 | 9.968 | 2.475 | H2-1 |
| 421 | 7 | M79 | L4x4x5/16 w... | .087 | 14.72 | .002 | 14.72 | y | 16644.398 | 122790.8... | 5.57 | 9.968 | 2.841 | H2-1 |
| 422 | 7 | M84 | PIPE 3.0 | .092 | 0 | .023 | 0 | | 28250.611 | 65205 | 5.749 | 5.749 | 1.594 | H1-1b |
| 423 | 7 | M85 | PIPE 3.0 | .092 | 12.5 | .023 | 12.5 | | 28250.611 | 65205 | 5.749 | 5.749 | 1.594 | H1-1b |
| 424 | 7 | M86 | PIPE 3.0 | .114 | 12.5 | .003 | 12.5 | | 28250.554 | 65205 | 5.749 | 5.749 | 1.219 | H1-1b |
| 425 | 7 | M87 | HSS4x0.250 | .353 | 0 | .042 | 0 | | 71625.082 | 89424 | 8.937 | 8.937 | 2.177 | H1-1b |
| 426 | 7 | M88 | HSS4x0.250 | .056 | 7.217 | .006 | 0 | | 71625.341 | 89424 | 8.937 | 8.937 | 1.993 | H1-1b |
| 427 | 7 | M89 | HSS4x0.250 | .353 | 0 | .042 | 0 | | 71625.082 | 89424 | 8.937 | 8.937 | 2.177 | H1-1b |
| 428 | 8 | M1 | W24x68 w1... | .178 | 0 | .038 | 0 | y | 1.73781e... | 2.33302e... | 564.878 | 2134.343 | 1.561 | H1-1b |
| 429 | 8 | M2 | W24x68 w1... | .279 | 0 | .059 | 8.708 | y | 1.73781e... | 2.33302e... | 564.878 | 2134.343 | 2.855 | H1-1b |
| 430 | 8 | M3 | W24X68 | .132 | 1.886 | .036 | 0 | y | 492994.2... | 904500 | 91.875 | 507.447 | 1 | H1-1b |
| 431 | 8 | M4 | W24X68 | .194 | 0 | .013 | 1.886 | z | 492994.2... | 904500 | 91.875 | 507.447 | 1 | H1-1b |
| 432 | 8 | M5 | HSS18x0.500 | .364 | 0 | .022 | 0 | | 687685.7... | 806400 | 375.375 | 375.375 | 2.333 | H1-1a |
| 433 | 8 | M6 | HSS18x0.500 | .191 | 0 | .014 | 17.318 | | 696116.0... | 806400 | 375.375 | 375.375 | 2.417 | H1-1b* |
| 434 | 8 | M7 | HSS18x0.500 | .295 | 16.91 | .043 | 16.91 | | 690364.7... | 806400 | 375.375 | 375.375 | 1.48 | H1-1b |
| 435 | 8 | M8 | HSS18x0.500 | .166 | 0 | .017 | 0 | | 711671.5... | 806400 | 375.375 | 375.375 | 1.835 | H1-1b |
| 436 | 8 | M29 | L5X5X6 | .120 | 6.822 | .004 | 0 | y | 29906.084 | 118260 | 7.418 | 12.233 | 1.136 | H2-1 |
| 437 | 8 | M30 | L5X5X6 | .120 | 6.822 | .004 | 0 | z | 29906.084 | 118260 | 7.418 | 12.233 | 1.136 | H2-1 |
| 438 | 8 | M31 | L5X5X6 | .053 | 6.822 | .003 | 0 | y | 29906.084 | 118260 | 7.418 | 12.233 | 1.136 | H2-1 |
| 439 | 8 | M32 | L5X5X6 | .053 | 6.822 | .003 | 0 | z | 29906.084 | 118260 | 7.418 | 12.233 | 1.136 | H2-1 |
| 440 | 8 | M33 | L5X5X6 | .054 | 6.822 | .003 | 0 | y | 29906.084 | 118260 | 7.418 | 12.233 | 1.136 | H2-1 |
| 441 | 8 | M34 | L5X5X6 | .054 | 6.822 | .003 | 0 | z | 29906.084 | 118260 | 7.418 | 12.233 | 1.136 | H2-1 |
| 442 | 8 | M35 | L5X5X6 | .056 | 6.822 | .003 | 0 | y | 29906.084 | 118260 | 7.418 | 12.233 | 1.136 | H2-1 |
| 443 | 8 | M36 | L5X5X6 | .056 | 6.822 | .003 | 0 | z | 29906.084 | 118260 | 7.418 | 12.233 | 1.136 | H2-1 |
| 444 | 8 | M37 | L5X5X6 | .058 | 6.822 | .003 | 0 | y | 29906.084 | 118260 | 7.418 | 12.233 | 1.136 | H2-1 |
| 445 | 8 | M38 | L5X5X6 | .058 | 6.822 | .003 | 0 | z | 29906.084 | 118260 | 7.418 | 12.233 | 1.136 | H2-1 |
| 446 | 8 | M39 | L5X5X6 | .098 | 7.613 | .004 | 0 | y | 74549.701 | 118260 | 7.418 | 11.768 | 1.136 | H2-1 |
| 447 | 8 | M40 | L5X5X6 | .131 | 7.613 | .003 | 15.226 | y | 74549.701 | 118260 | 7.418 | 11.768 | 1.136 | H2-1 |
| 448 | 8 | M41 | L5X5X6 | .120 | 7.613 | .003 | 0 | y | 24012.917 | 118260 | 7.418 | 11.768 | 1.136 | H2-1 |
| 449 | 8 | M42 | L5X5X6 | .151 | 7.613 | .003 | 0 | y | 74549.701 | 118260 | 7.418 | 11.768 | 1.136 | H2-1 |
| 450 | 8 | M43 | L3.5X3.5X5 | .364 | 9.699 | .003 | 0 | y | 15754.264 | 68040 | 2.882 | 3.881 | 1.136 | H2-1 |
| 451 | 8 | M44 | L3.5X3.5X5 | .218 | 9.906 | .003 | 0 | y | 15754.264 | 68040 | 2.882 | 3.881 | 1.136 | H2-1 |
| 452 | 8 | M45 | L5x5x3/8 wH... | .315 | 15.848 | .004 | 0 | y | 30839.58 | 170301.5... | 10.651 | 7.793 | 1.136 | H2-1 |
| 453 | 8 | M46 | L5x5x3/8 wH... | .222 | 16.185 | .004 | 32.37 | y | 30839.58 | 170301.5... | 10.651 | 7.793 | 1.136 | H2-1 |
| 454 | 8 | M47 | WT6X15 | .025 | 6.333 | .004 | 12.666 | y | 76798.045 | 142560 | 12.906 | 11.902 | 1.136 | H1-1b |
| 455 | 8 | M48 | WT6X15 | .398 | 12.666 | .012 | 12.666 | y | 76798.045 | 142560 | 12.906 | 7.439 | 2.188 | H1-1a |
| 456 | 8 | M49 | WT6X15 | .031 | 6.048 | .004 | 0 | y | 79928.999 | 142560 | 12.906 | 11.902 | 1.136 | H1-1b |
| 457 | 8 | M50 | WT6X15 | .416 | 5.922 | .005 | 0 | y | 79928.999 | 142560 | 12.906 | 11.902 | 1.136 | H1-1a |
| 458 | 8 | M51 | WT6X15 | .076 | 6.393 | .003 | 0 | y | 76128.484 | 142560 | 12.906 | 11.902 | 1.136 | H1-1b |
| 459 | 8 | M52 | WT6X15 | .110 | 6.393 | .004 | 0 | y | 76128.484 | 142560 | 12.906 | 11.902 | 1.136 | H1-1b |
| 460 | 8 | M53 | WT6X15 | .173 | 0 | .003 | 12.011 | y | 80394.207 | 142560 | 12.906 | 11.902 | 1.136 | H1-1b* |
| 461 | 8 | M54 | WT6X15 | .259 | 5.88 | .004 | 0 | y | 80394.207 | 142560 | 12.906 | 11.902 | 1.136 | H1-1a |
| 462 | 8 | M55 | WT6X15 | .060 | 6.443 | .004 | 12.885 | y | 75583.143 | 142560 | 12.906 | 11.902 | 1.136 | H1-1b |
| 463 | 8 | M56 | WT6X15 | .100 | 6.443 | .004 | 0 | y | 75583.143 | 142560 | 12.906 | 11.902 | 1.136 | H1-1b |
| 464 | 8 | M57 | WT6X15 | .118 | 0 | .004 | 12.139 | y | 79692.549 | 142560 | 12.906 | 11.902 | 1.136 | H1-1b* |
| 465 | 8 | M58 | WT6X15 | .223 | 5.943 | .004 | 0 | y | 79692.549 | 142560 | 12.906 | 11.902 | 1.136 | H1-1a |
| 466 | 8 | M59 | WT6X15 | .046 | 6.369 | .004 | 12.738 | y | 76397.946 | 142560 | 12.906 | 11.902 | 1.136 | H1-1b |
| 467 | 8 | M60 | WT6X15 | .073 | 6.369 | .004 | 12.738 | y | 76397.946 | 142560 | 12.906 | 11.902 | 1.136 | H1-1b |

## Member AISC 14th(360-10): LRFD Steel Code Checks (Continued)

| | LC | Member | Shape | UC Max | Loc[ft] | Shear UC | Loc[ft] | Dir | phi*Pnc[lb] | phi*Pnt[lb] | phi*Mnyy... | phi*Mnzz... | Cb | Eqn |
|---|---|---|---|---|---|---|---|---|---|---|---|---|---|---|
| 468 | 8 | M61 | WT6X15 | .070 | 0 | .003 | 12.139 | y | 79692.549 | 142560 | 12.906 | 11.902 | 1.136 | H1-1b* |
| 469 | 8 | M62 | WT6X15 | .317 | 5.943 | .004 | 0 | y | 79692.549 | 142560 | 12.906 | 11.902 | 1.136 | H1-1a |
| 470 | 8 | M63 | WT6X15 | .050 | 6.369 | .005 | 12.738 | y | 76397.946 | 142560 | 12.906 | 11.902 | 1.136 | H1-1b |
| 471 | 8 | M64 | WT6X15 | .104 | 6.369 | .004 | 12.738 | y | 76397.946 | 142560 | 12.906 | 11.902 | 1.136 | H1-1b |
| 472 | 8 | M65 | WT6X15 | .073 | 0 | .007 | 0 | y | 83252.56 | 142560 | 12.906 | 11.902 | 1.136 | H1-1b* |
| 473 | 8 | M66 | WT6X15 | .060 | 0 | .004 | 11.482 | y | 83252.56 | 142560 | 12.906 | 11.902 | 1.136 | H1-1b* |
| 474 | 8 | M71 | HSS8X4X4 | .009 | 0 | .002 | 0 | y | 102691.6... | 169776 | 22.14 | 35.91 | 2.381 | H1-1b |
| 475 | 8 | M72 | HSS8X4X4 | .009 | 13.5 | .002 | 13.5 | y | 102691.6... | 169776 | 22.14 | 35.91 | 2.381 | H1-1b |
| 476 | 8 | M75 | HSS6X4X4 | .021 | 18.182 | .003 | 18.182 | y | 52673.992 | 139320 | 17.415 | 23.031 | 2.381 | H1-1b |
| 477 | 8 | M76 | HSS6X4X4 | .021 | 18.182 | .003 | 18.182 | y | 52673.992 | 139320 | 17.415 | 23.031 | 2.381 | H1-1b |
| 478 | 8 | M77 | HSS6X4X4 | .019 | 0 | .003 | 0 | y | 57728.58 | 139320 | 17.415 | 23.031 | 2.381 | H1-1b |
| 479 | 8 | M76A | L4x4x5/16 w... | .017 | 7.571 | .001 | 7.571 | y | 59982.319 | 122790.8... | 5.57 | 9.968 | 2.945 | H2-1 |
| 480 | 8 | M77A | L4x4x5/16 w... | .017 | 7.571 | .001 | 7.571 | y | 59982.319 | 122790.8... | 5.57 | 9.968 | 2.249 | H2-1 |
| 481 | 8 | M78 | L4x4x5/16 w... | .081 | 14.72 | .002 | 14.72 | y | 16644.398 | 122790.8... | 5.57 | 9.968 | 2.59 | H2-1 |
| 482 | 8 | M79 | L4x4x5/16 w... | .091 | 14.72 | .002 | 14.72 | y | 16644.398 | 122790.8... | 5.57 | 9.968 | 2.837 | H2-1 |
| 483 | 8 | M84 | PIPE 3.0 | .087 | 0 | .023 | 0 | | 28250.611 | 65205 | 5.749 | 5.749 | 1.593 | H1-1b |
| 484 | 8 | M85 | PIPE 3.0 | .096 | 12.5 | .022 | 12.5 | | 28250.611 | 65205 | 5.749 | 5.749 | 1.595 | H1-1b |
| 485 | 8 | M86 | PIPE 3.0 | .113 | 12.5 | .003 | 12.5 | | 28250.554 | 65205 | 5.749 | 5.749 | 1.221 | H1-1b |
| 486 | 8 | M87 | HSS4x0.250 | .350 | 0 | .042 | 0 | | 71625.082 | 89424 | 8.937 | 8.937 | 2.177 | H1-1b |
| 487 | 8 | M88 | HSS4x0.250 | .061 | 0 | .006 | 0 | | 71625.341 | 89424 | 8.937 | 8.937 | 1.994 | H1-1b |
| 488 | 8 | M89 | HSS4x0.250 | .359 | 0 | .042 | 0 | | 71625.082 | 89424 | 8.937 | 8.937 | 2.177 | H1-1b |
| 489 | 9 | M1 | W24x68 w1... | .288 | 0 | .047 | 10.292 | y | 1.73781e... | 2.33302e... | 564.878 | 2134.343 | 1.247 | H1-1b |
| 490 | 9 | M2 | W24x68 w1... | .300 | 0 | .047 | 10.094 | y | 1.73781e... | 2.33302e... | 564.878 | 2134.343 | 1.57 | H1-1b |
| 491 | 9 | M3 | W24X68 | .310 | 5.028 | .051 | 0 | y | 492994.2... | 904500 | 91.875 | 237.031 | 3.158 | H1-1b |
| 492 | 9 | M4 | W24X68 | .231 | 0 | .036 | 1.886 | y | 492994.2... | 904500 | 91.875 | 507.447 | 1 | H1-1b |
| 493 | 9 | M5 | HSS18x0.500 | .256 | 0 | .032 | 0 | | 687685.7... | 806400 | 375.375 | 375.375 | 2.329 | H1-1b |
| 494 | 9 | M6 | HSS18x0.500 | .115 | 0 | .020 | 3.175 | | 696116.0... | 806400 | 375.375 | 375.375 | 2.406 | H1-1b* |
| 495 | 9 | M7 | HSS18x0.500 | .335 | 16.91 | .052 | 16.91 | | 690364.7... | 806400 | 375.375 | 375.375 | 1.48 | H1-1b |
| 496 | 9 | M8 | HSS18x0.500 | .194 | 0 | .021 | 0 | | 711671.5... | 806400 | 375.375 | 375.375 | 1.835 | H1-1b |
| 497 | 9 | M29 | L5X5X6 | .087 | 6.822 | .005 | 0 | y | 29906.084 | 118260 | 7.418 | 12.233 | 1.136 | H2-1 |
| 498 | 9 | M30 | L5X5X6 | .085 | 6.822 | .005 | 0 | z | 29906.084 | 118260 | 7.418 | 12.233 | 1.136 | H2-1 |
| 499 | 9 | M31 | L5X5X6 | .054 | 6.822 | .003 | 0 | y | 29906.084 | 118260 | 7.418 | 12.233 | 1.136 | H2-1 |
| 500 | 9 | M32 | L5X5X6 | .054 | 6.822 | .003 | 0 | z | 29906.084 | 118260 | 7.418 | 12.233 | 1.136 | H2-1 |
| 501 | 9 | M33 | L5X5X6 | .055 | 6.822 | .003 | 0 | y | 29906.084 | 118260 | 7.418 | 12.233 | 1.136 | H2-1 |
| 502 | 9 | M34 | L5X5X6 | .055 | 6.822 | .003 | 0 | z | 29906.084 | 118260 | 7.418 | 12.233 | 1.136 | H2-1 |
| 503 | 9 | M35 | L5X5X6 | .055 | 6.822 | .003 | 0 | y | 29906.084 | 118260 | 7.418 | 12.233 | 1.136 | H2-1 |
| 504 | 9 | M36 | L5X5X6 | .055 | 6.822 | .003 | 0 | z | 29906.084 | 118260 | 7.418 | 12.233 | 1.136 | H2-1 |
| 505 | 9 | M37 | L5X5X6 | .056 | 6.822 | .003 | 0 | y | 29906.084 | 118260 | 7.418 | 12.233 | 1.136 | H2-1 |
| 506 | 9 | M38 | L5X5X6 | .056 | 6.822 | .003 | 0 | z | 29906.084 | 118260 | 7.418 | 12.233 | 1.136 | H2-1 |
| 507 | 9 | M39 | L5X5X6 | .132 | 7.613 | .004 | 15.226 | y | 74549.701 | 118260 | 7.418 | 11.768 | 1.136 | H2-1 |
| 508 | 9 | M40 | L5X5X6 | .181 | 7.613 | .003 | 15.226 | y | 74549.701 | 118260 | 7.418 | 11.768 | 1.136 | H2-1 |
| 509 | 9 | M41 | L5X5X6 | .165 | 7.613 | .003 | 0 | y | 24012.917 | 118260 | 7.418 | 11.768 | 1.136 | H2-1 |
| 510 | 9 | M42 | L5X5X6 | .225 | 7.613 | .003 | 0 | y | 74549.701 | 118260 | 7.418 | 11.768 | 1.136 | H2-1 |
| 511 | 9 | M43 | L3.5X3.5X5 | .670 | 9.699 | .003 | 0 | y | 15754.264 | 68040 | 2.882 | 3.881 | 1.136 | H2-1 |
| 512 | 9 | M44 | L3.5X3.5X5 | .267 | 9.906 | .003 | 0 | y | 15754.264 | 68040 | 2.882 | 3.881 | 1.136 | H2-1 |
| 513 | 9 | M45 | L5x5x3/8 wH... | .480 | 15.848 | .004 | 32.37 | y | 30839.58 | 170301.5... | 10.651 | 7.793 | 1.136 | H2-1 |
| 514 | 9 | M46 | L5x5x3/8 wH... | .241 | 16.185 | .004 | 0 | y | 30839.58 | 170301.5... | 10.651 | 7.793 | 1.136 | H2-1 |
| 515 | 9 | M47 | WT6X15 | .238 | 6.201 | .005 | 12.666 | y | 76798.045 | 142560 | 12.906 | 11.902 | 1.136 | H1-1a |
| 516 | 9 | M48 | WT6X15 | .473 | 12.666 | .015 | 12.666 | y | 76798.045 | 142560 | 12.906 | 7.439 | 2.083 | H1-1a |
| 517 | 9 | M49 | WT6X15 | .096 | 6.048 | .005 | 0 | y | 79928.999 | 142560 | 12.906 | 11.902 | 1.136 | H1-1b |
| 518 | 9 | M50 | WT6X15 | .490 | 5.922 | .006 | 0 | y | 79928.999 | 142560 | 12.906 | 11.902 | 1.136 | H1-1a |
| 519 | 9 | M51 | WT6X15 | .035 | 6.393 | .004 | 0 | y | 76128.484 | 142560 | 12.906 | 11.902 | 1.136 | H1-1b |

## Member AISC 14th(360-10): LRFD Steel Code Checks (Continued)

| | LC | Member | Shape | UC Max | Loc[ft] | Shear UC | Loc[ft] | Dir | phi*Pnc[lb] | phi*Pnt[lb] | phi*Mnyy... | phi*Mnzz... | Cb | Eqn |
|---|---|---|---|---|---|---|---|---|---|---|---|---|---|---|
| 520 | 9 | M52 | WT6X15 | .092 | 6.393 | .005 | 12.787 | y | 76128.484 | 142560 | 12.906 | 11.902 | 1.136 | H1-1b |
| 521 | 9 | M53 | WT6X15 | .065 | 0 | .003 | 0 | y | 80394.207 | 142560 | 12.906 | 11.902 | 1.136 | H1-1b* |
| 522 | 9 | M54 | WT6X15 | .168 | 0 | .004 | 0 | y | 80394.207 | 142560 | 12.906 | 11.902 | 1.136 | H1-1b* |
| 523 | 9 | M55 | WT6X15 | .030 | 6.443 | .005 | 0 | y | 75583.143 | 142560 | 12.906 | 11.902 | 1.136 | H1-1b |
| 524 | 9 | M56 | WT6X15 | .090 | 6.443 | .005 | 0 | y | 75583.143 | 142560 | 12.906 | 11.902 | 1.136 | H1-1b |
| 525 | 9 | M57 | WT6X15 | .035 | 6.07 | .004 | 0 | y | 79692.549 | 142560 | 12.906 | 11.902 | 1.136 | H1-1b |
| 526 | 9 | M58 | WT6X15 | .161 | 0 | .005 | 0 | y | 79692.549 | 142560 | 12.906 | 11.902 | 1.136 | H1-1b* |
| 527 | 9 | M59 | WT6X15 | .030 | 6.369 | .005 | 0 | y | 76397.946 | 142560 | 12.906 | 11.902 | 1.136 | H1-1b |
| 528 | 9 | M60 | WT6X15 | .068 | 6.369 | .005 | 12.738 | y | 76397.946 | 142560 | 12.906 | 11.902 | 1.136 | H1-1b |
| 529 | 9 | M61 | WT6X15 | .051 | 6.07 | .004 | 0 | y | 79692.549 | 142560 | 12.906 | 11.902 | 1.136 | H1-1b |
| 530 | 9 | M62 | WT6X15 | .311 | 5.943 | .004 | 0 | y | 79692.549 | 142560 | 12.906 | 11.902 | 1.136 | H1-1a |
| 531 | 9 | M63 | WT6X15 | .069 | 0 | .005 | 0 | y | 76397.946 | 142560 | 12.906 | 11.902 | 1.136 | H1-1b* |
| 532 | 9 | M64 | WT6X15 | .099 | 6.369 | .003 | 12.738 | y | 76397.946 | 142560 | 12.906 | 11.902 | 1.136 | H1-1b |
| 533 | 9 | M65 | WT6X15 | .054 | 0 | .008 | 0 | y | 83252.56 | 142560 | 12.906 | 11.902 | 1.136 | H1-1b* |
| 534 | 9 | M66 | WT6X15 | .035 | 5.741 | .007 | 0 | y | 83252.56 | 142560 | 12.906 | 11.902 | 1.136 | H1-1b |
| 535 | 9 | M71 | HSS8X4X4 | .009 | 0 | .002 | 0 | y | 102691.6... | 169776 | 22.14 | 35.91 | 2.381 | H1-1b |
| 536 | 9 | M72 | HSS8X4X4 | .009 | 13.5 | .002 | 13.5 | y | 102691.6... | 169776 | 22.14 | 35.91 | 2.381 | H1-1b |
| 537 | 9 | M75 | HSS6X4X4 | .021 | 18.182 | .003 | 18.182 | y | 52673.992 | 139320 | 17.415 | 23.031 | 2.381 | H1-1b |
| 538 | 9 | M76 | HSS6X4X4 | .021 | 18.182 | .003 | 18.182 | y | 52673.992 | 139320 | 17.415 | 23.031 | 2.381 | H1-1b |
| 539 | 9 | M77 | HSS6X4X4 | .019 | 0 | .003 | 0 | y | 57728.58 | 139320 | 17.415 | 23.031 | 2.381 | H1-1b |
| 540 | 9 | M76A | L4x4x5/16 w... | .017 | 7.571 | .001 | 7.571 | y | 59982.319 | 122790.8... | 5.57 | 9.968 | 3.125 | H2-1 |
| 541 | 9 | M77A | L4x4x5/16 w... | .015 | 7.571 | .001 | 7.571 | y | 59982.319 | 122790.8... | 5.57 | 9.968 | 2.48 | H2-1 |
| 542 | 9 | M78 | L4x4x5/16 w... | .070 | 14.72 | .002 | 14.72 | y | 16644.398 | 122790.8... | 5.57 | 9.968 | 2.69 | H2-1 |
| 543 | 9 | M79 | L4x4x5/16 w... | .090 | 14.72 | .002 | 14.72 | y | 16644.398 | 122790.8... | 5.57 | 9.968 | 2.71 | H2-1 |
| 544 | 9 | M84 | PIPE 3.0 | .090 | 0 | .023 | 0 | | 28250.611 | 65205 | 5.749 | 5.749 | 1.594 | H1-1b |
| 545 | 9 | M85 | PIPE 3.0 | .099 | 12.5 | .022 | 12.5 | | 28250.611 | 65205 | 5.749 | 5.749 | 1.599 | H1-1b |
| 546 | 9 | M86 | PIPE 3.0 | .112 | 12.5 | .003 | 12.5 | | 28250.554 | 65205 | 5.749 | 5.749 | 1.224 | H1-1b |
| 547 | 9 | M87 | HSS4x0.250 | .355 | 0 | .042 | 0 | | 71625.082 | 89424 | 8.937 | 8.937 | 2.178 | H1-1b |
| 548 | 9 | M88 | HSS4x0.250 | .083 | 0 | .007 | 0 | | 71625.341 | 89424 | 8.937 | 8.937 | 1.995 | H1-1b |
| 549 | 9 | M89 | HSS4x0.250 | .365 | 0 | .042 | 0 | | 71625.082 | 89424 | 8.937 | 8.937 | 2.177 | H1-1b |
| 550 | 10 | M1 | W24x68 w1... | .323 | 0 | .045 | 19 | y | 1.73781e... | 2.33302e... | 564.878 | 2134.343 | 1.193 | H1-1b |
| 551 | 10 | M2 | W24x68 w1... | .308 | 0 | .045 | 19 | y | 1.73781e... | 2.33302e... | 564.878 | 2134.343 | 1.188 | H1-1b |
| 552 | 10 | M3 | W24X68 | .479 | 4.4 | .053 | 1.886 | y | 492994.2... | 904500 | 91.875 | 245.783 | 3.275 | H1-1a |
| 553 | 10 | M4 | W24X68 | .273 | 0 | .052 | 1.886 | y | 492994.2... | 904500 | 91.875 | 250.493 | 3.338 | H1-1b |
| 554 | 10 | M5 | HSS18x0.500 | .210 | 0 | .036 | 0 | | 687685.7... | 806400 | 375.375 | 375.375 | 2.325 | H1-1b |
| 555 | 10 | M6 | HSS18x0.500 | .052 | 27.708 | .022 | 3.175 | | 696116.0... | 806400 | 375.375 | 375.375 | 2.404 | H1-1b |
| 556 | 10 | M7 | HSS18x0.500 | .359 | 16.91 | .058 | 16.91 | | 690364.7... | 806400 | 375.375 | 375.375 | 1.48 | H1-1b |
| 557 | 10 | M8 | HSS18x0.500 | .217 | 0 | .024 | 0 | | 711671.5... | 806400 | 375.375 | 375.375 | 1.835 | H1-1b |
| 558 | 10 | M29 | L5X5X6 | .055 | 6.822 | .005 | 0 | y | 29906.084 | 118260 | 7.418 | 12.233 | 1.136 | H2-1 |
| 559 | 10 | M30 | L5X5X6 | .056 | 6.822 | .005 | 0 | z | 29906.084 | 118260 | 7.418 | 12.233 | 1.136 | H2-1 |
| 560 | 10 | M31 | L5X5X6 | .055 | 6.822 | .003 | 0 | y | 29906.084 | 118260 | 7.418 | 12.233 | 1.136 | H2-1 |
| 561 | 10 | M32 | L5X5X6 | .055 | 6.822 | .003 | 0 | z | 29906.084 | 118260 | 7.418 | 12.233 | 1.136 | H2-1 |
| 562 | 10 | M33 | L5X5X6 | .056 | 6.822 | .003 | 0 | y | 29906.084 | 118260 | 7.418 | 12.233 | 1.136 | H2-1 |
| 563 | 10 | M34 | L5X5X6 | .056 | 6.822 | .003 | 0 | z | 29906.084 | 118260 | 7.418 | 12.233 | 1.136 | H2-1 |
| 564 | 10 | M35 | L5X5X6 | .053 | 6.822 | .003 | 0 | y | 29906.084 | 118260 | 7.418 | 12.233 | 1.136 | H2-1 |
| 565 | 10 | M36 | L5X5X6 | .053 | 6.822 | .003 | 0 | z | 29906.084 | 118260 | 7.418 | 12.233 | 1.136 | H2-1 |
| 566 | 10 | M37 | L5X5X6 | .054 | 6.822 | .003 | 0 | y | 29906.084 | 118260 | 7.418 | 12.233 | 1.136 | H2-1 |
| 567 | 10 | M38 | L5X5X6 | .054 | 6.822 | .003 | 0 | z | 29906.084 | 118260 | 7.418 | 12.233 | 1.136 | H2-1 |
| 568 | 10 | M39 | L5X5X6 | .146 | 7.613 | .004 | 0 | y | 74549.701 | 118260 | 7.418 | 11.768 | 1.136 | H2-1 |
| 569 | 10 | M40 | L5X5X6 | .197 | 7.613 | .003 | 15.226 | y | 74549.701 | 118260 | 7.418 | 11.768 | 1.136 | H2-1 |
| 570 | 10 | M41 | L5X5X6 | .182 | 7.613 | .003 | 15.226 | y | 24012.917 | 118260 | 7.418 | 11.768 | 1.136 | H2-1 |
| 571 | 10 | M42 | L5X5X6 | .254 | 7.613 | .003 | 0 | y | 74549.701 | 118260 | 7.418 | 11.768 | 1.136 | H2-1 |

## Member AISC 14th(360-10): LRFD Steel Code Checks (Continued)

| | LC | Member | Shape | UC Max | Loc[ft] | Shear UC | Loc[ft] | Dir | phi*Pnc[lb] | phi*Pnt[lb] | phi*Mnyy... | phi*Mnzz... | Cb | Eqn |
|---|---|---|---|---|---|---|---|---|---|---|---|---|---|---|
| 572 | 10 | M43 | L3.5X3.5X5 | .833 | 9.699 | .003 | 0 | y | 15754.264 | 68040 | 2.882 | 3.881 | 1.136 | H2-1 |
| 573 | 10 | M44 | L3.5X3.5X5 | .274 | 9.906 | .003 | 19.812 | y | 15754.264 | 68040 | 2.882 | 3.881 | 1.136 | H2-1 |
| 574 | 10 | M45 | L5x5x3/8 wH... | .571 | 15.848 | .004 | 32.37 | y | 30839.58 | 170301.5... | 10.651 | 7.793 | 1.136 | H2-1 |
| 575 | 10 | M46 | L5x5x3/8 wH... | .243 | 16.185 | .004 | 0 | y | 30839.58 | 170301.5... | 10.651 | 7.793 | 1.136 | H2-1 |
| 576 | 10 | M47 | WT6X15 | .395 | 6.201 | .005 | 12.666 | y | 76798.045 | 142560 | 12.906 | 11.902 | 1.136 | H1-1a |
| 577 | 10 | M48 | WT6X15 | .353 | 12.666 | .015 | 12.666 | y | 76798.045 | 142560 | 12.906 | 7.439 | 2.015 | H1-1b |
| 578 | 10 | M49 | WT6X15 | .258 | 6.048 | .005 | 12.096 | y | 79928.999 | 142560 | 12.906 | 11.902 | 1.136 | H1-1a |
| 579 | 10 | M50 | WT6X15 | .437 | 5.922 | .006 | 0 | y | 79928.999 | 142560 | 12.906 | 11.902 | 1.136 | H1-1a |
| 580 | 10 | M51 | WT6X15 | .126 | 0 | .004 | 0 | y | 76128.484 | 142560 | 12.906 | 11.902 | 1.136 | H1-1b* |
| 581 | 10 | M52 | WT6X15 | .055 | 6.393 | .005 | 12.787 | y | 76128.484 | 142560 | 12.906 | 11.902 | 1.136 | H1-1b |
| 582 | 10 | M53 | WT6X15 | .041 | 6.005 | .004 | 12.011 | y | 80394.207 | 142560 | 12.906 | 11.902 | 1.136 | H1-1b |
| 583 | 10 | M54 | WT6X15 | .051 | 0 | .004 | 0 | y | 80394.207 | 142560 | 12.906 | 11.902 | 1.136 | H1-1b* |
| 584 | 10 | M55 | WT6X15 | .150 | 0 | .005 | 12.885 | y | 75583.143 | 142560 | 12.906 | 11.902 | 1.136 | H1-1b* |
| 585 | 10 | M56 | WT6X15 | .061 | 6.443 | .006 | 0 | y | 75583.143 | 142560 | 12.906 | 11.902 | 1.136 | H1-1b |
| 586 | 10 | M57 | WT6X15 | .046 | 6.07 | .005 | 0 | y | 79692.549 | 142560 | 12.906 | 11.902 | 1.136 | H1-1b |
| 587 | 10 | M58 | WT6X15 | .076 | 0 | .005 | 12.139 | y | 79692.549 | 142560 | 12.906 | 11.902 | 1.136 | H1-1b* |
| 588 | 10 | M59 | WT6X15 | .096 | 0 | .006 | 0 | y | 76397.946 | 142560 | 12.906 | 11.902 | 1.136 | H1-1b* |
| 589 | 10 | M60 | WT6X15 | .051 | 6.369 | .006 | 0 | y | 76397.946 | 142560 | 12.906 | 11.902 | 1.136 | H1-1b |
| 590 | 10 | M61 | WT6X15 | .091 | 6.07 | .004 | 0 | y | 79692.549 | 142560 | 12.906 | 11.902 | 1.136 | H1-1b |
| 591 | 10 | M62 | WT6X15 | .222 | 5.943 | .004 | 12.139 | y | 79692.549 | 142560 | 12.906 | 11.902 | 1.136 | H1-1a |
| 592 | 10 | M63 | WT6X15 | .237 | 6.236 | .004 | 0 | y | 76397.946 | 142560 | 12.906 | 11.902 | 1.136 | H1-1a |
| 593 | 10 | M64 | WT6X15 | .073 | 6.369 | .004 | 12.738 | y | 76397.946 | 142560 | 12.906 | 11.902 | 1.136 | H1-1b |
| 594 | 10 | M65 | WT6X15 | .033 | 5.741 | .008 | 11.482 | y | 83252.56 | 142560 | 12.906 | 11.902 | 1.136 | H1-1b |
| 595 | 10 | M66 | WT6X15 | .027 | 5.741 | .008 | 0 | y | 83252.56 | 142560 | 12.906 | 11.902 | 1.136 | H1-1b |
| 596 | 10 | M71 | HSS8X4X4 | .009 | 0 | .002 | 0 | y | 102691.6... | 169776 | 22.14 | 35.91 | 2.382 | H1-1b |
| 597 | 10 | M72 | HSS8X4X4 | .009 | 13.5 | .002 | 13.5 | y | 102691.6... | 169776 | 22.14 | 35.91 | 2.381 | H1-1b |
| 598 | 10 | M75 | HSS6X4X4 | .021 | 18.182 | .003 | 18.182 | y | 52673.992 | 139320 | 17.415 | 23.031 | 2.381 | H1-1b |
| 599 | 10 | M76 | HSS6X4X4 | .021 | 18.182 | .003 | 18.182 | y | 52673.992 | 139320 | 17.415 | 23.031 | 2.381 | H1-1b |
| 600 | 10 | M77 | HSS6X4X4 | .019 | 0 | .003 | 0 | y | 57728.58 | 139320 | 17.415 | 23.031 | 2.381 | H1-1b |
| 601 | 10 | M76A | L4x4x5/16 w... | .016 | 7.571 | .001 | 7.571 | y | 59982.319 | 122790.8... | 5.57 | 9.968 | 2.953 | H2-1 |
| 602 | 10 | M77A | L4x4x5/16 w... | .018 | 7.571 | .001 | 7.571 | y | 59982.319 | 122790.8... | 5.57 | 9.968 | 2.719 | H2-1 |
| 603 | 10 | M78 | L4x4x5/16 w... | .058 | 14.72 | .002 | 14.72 | y | 16644.398 | 122790.8... | 5.57 | 9.968 | 2.707 | H2-1 |
| 604 | 10 | M79 | L4x4x5/16 w... | .084 | 14.72 | .002 | 0 | y | 16644.398 | 122790.8... | 5.57 | 9.968 | 2.694 | H2-1 |
| 605 | 10 | M84 | PIPE_3.0 | .091 | 0 | .023 | 0 | | 28250.611 | 65205 | 5.749 | 5.749 | 1.598 | H1-1b |
| 606 | 10 | M85 | PIPE_3.0 | .097 | 12.5 | .022 | 12.5 | | 28250.611 | 65205 | 5.749 | 5.749 | 1.604 | H1-1b |
| 607 | 10 | M86 | PIPE_3.0 | .110 | 12.5 | .003 | 12.5 | | 28250.554 | 65205 | 5.749 | 5.749 | 1.227 | H1-1b |
| 608 | 10 | M87 | HSS4x0.250 | .356 | 0 | .042 | 0 | | 71625.082 | 89424 | 8.937 | 8.937 | 2.178 | H1-1b |
| 609 | 10 | M88 | HSS4x0.250 | .093 | 0 | .008 | 0 | | 71625.341 | 89424 | 8.937 | 8.937 | 1.991 | H1-1b |
| 610 | 10 | M89 | HSS4x0.250 | .365 | 0 | .042 | 0 | | 71625.082 | 89424 | 8.937 | 8.937 | 2.177 | H1-1b |
| 611 | 11 | M1 | W24x68 w1... | .321 | 0 | .043 | 1.781 | y | 1.73781e... | 2.33302e... | 564.878 | 2134.343 | 1.554 | H1-1b |
| 612 | 11 | M2 | W24x68 w1... | .283 | 0 | .048 | 10.292 | y | 1.73781e... | 2.33302e... | 564.878 | 2134.343 | 1.276 | H1-1b |
| 613 | 11 | M3 | W24X68 | .540 | 4.4 | .041 | 1.886 | y | 492994.2... | 904500 | 91.875 | 221.377 | 2.95 | H1-1a |
| 614 | 11 | M4 | W24X68 | .270 | 0 | .053 | 0 | y | 492994.2... | 904500 | 91.875 | 228.731 | 3.048 | H1-1b |
| 615 | 11 | M5 | HSS18x0.500 | .232 | 0 | .032 | 0 | | 687685.7... | 806400 | 375.375 | 375.375 | 2.321 | H1-1b |
| 616 | 11 | M6 | HSS18x0.500 | .064 | 27.708 | .020 | 3.175 | | 696116.0... | 806400 | 375.375 | 375.375 | 2.404 | H1-1b |
| 617 | 11 | M7 | HSS18x0.500 | .370 | 16.91 | .058 | 16.91 | | 690364.7... | 806400 | 375.375 | 375.375 | 1.48 | H1-1b |
| 618 | 11 | M8 | HSS18x0.500 | .227 | 0 | .023 | 0 | | 711671.5... | 806400 | 375.375 | 375.375 | 1.835 | H1-1b |
| 619 | 11 | M29 | L5X5X6 | .065 | 6.822 | .005 | 0 | y | 29906.084 | 118260 | 7.418 | 12.233 | 1.136 | H2-1 |
| 620 | 11 | M30 | L5X5X6 | .066 | 6.822 | .005 | 0 | z | 29906.084 | 118260 | 7.418 | 12.233 | 1.136 | H2-1 |
| 621 | 11 | M31 | L5X5X6 | .056 | 6.822 | .003 | 0 | y | 29906.084 | 118260 | 7.418 | 12.233 | 1.136 | H2-1 |
| 622 | 11 | M32 | L5X5X6 | .056 | 6.822 | .003 | 0 | z | 29906.084 | 118260 | 7.418 | 12.233 | 1.136 | H2-1 |
| 623 | 11 | M33 | L5X5X6 | .057 | 6.822 | .003 | 0 | y | 29906.084 | 118260 | 7.418 | 12.233 | 1.136 | H2-1 |

## Member AISC 14th(360-10): LRFD Steel Code Checks (Continued)

| | LC | Member | Shape | UC Max | Loc[ft] | Shear UC | Loc[ft] | Dir | phi*Pnc[lb] | phi*Pnt[lb] | phi*Mnyy... | phi*Mnzz... | Cb | Eqn |
|---|---|---|---|---|---|---|---|---|---|---|---|---|---|---|
| 624 | 11 | M34 | L5X5X6 | .057 | 6.822 | .003 | 0 | z | 29906.084 | 118260 | 7.418 | 12.233 | 1.136 | H2-1 |
| 625 | 11 | M35 | L5X5X6 | .060 | 6.822 | .003 | 0 | y | 29906.084 | 118260 | 7.418 | 12.233 | 1.136 | H2-1 |
| 626 | 11 | M36 | L5X5X6 | .059 | 6.822 | .003 | 0 | z | 29906.084 | 118260 | 7.418 | 12.233 | 1.136 | H2-1 |
| 627 | 11 | M37 | L5X5X6 | .059 | 6.822 | .003 | 0 | y | 29906.084 | 118260 | 7.418 | 12.233 | 1.136 | H2-1 |
| 628 | 11 | M38 | L5X5X6 | .058 | 6.822 | .003 | 0 | z | 29906.084 | 118260 | 7.418 | 12.233 | 1.136 | H2-1 |
| 629 | 11 | M39 | L5X5X6 | .137 | 7.613 | .004 | 15.226 | y | 74549.701 | 118260 | 7.418 | 11.768 | 1.136 | H2-1 |
| 630 | 11 | M40 | L5X5X6 | .178 | 7.613 | .003 | 15.226 | y | 74549.701 | 118260 | 7.418 | 11.768 | 1.136 | H2-1 |
| 631 | 11 | M41 | L5X5X6 | .166 | 7.613 | .003 | 15.226 | y | 24012.917 | 118260 | 7.418 | 11.768 | 1.136 | H2-1 |
| 632 | 11 | M42 | L5X5X6 | .232 | 7.613 | .003 | 15.226 | y | 74549.701 | 118260 | 7.418 | 11.768 | 1.136 | H2-1 |
| 633 | 11 | M43 | L3.5X3.5X5 | .818 | 9.699 | .003 | 0 | y | 15754.264 | 68040 | 2.882 | 3.881 | 1.136 | H2-1 |
| 634 | 11 | M44 | L3.5X3.5X5 | .240 | 9.906 | .003 | 0 | y | 15754.264 | 68040 | 2.882 | 3.881 | 1.136 | H2-1 |
| 635 | 11 | M45 | L5x5x3/8 wH... | .569 | 15.848 | .004 | 0 | y | 30839.58 | 170301.5... | 10.651 | 7.793 | 1.136 | H2-1 |
| 636 | 11 | M46 | L5x5x3/8 wH... | .229 | 16.185 | .004 | 0 | y | 30839.58 | 170301.5... | 10.651 | 7.793 | 1.136 | H2-1 |
| 637 | 11 | M47 | WT6X15 | .456 | 6.201 | .005 | 0 | y | 76798.045 | 142560 | 12.906 | 11.902 | 1.136 | H1-1a |
| 638 | 11 | M48 | WT6X15 | .233 | 12.666 | .011 | 12.666 | y | 76798.045 | 142560 | 12.906 | 7.439 | 1.943 | H1-1b |
| 639 | 11 | M49 | WT6X15 | .289 | 6.048 | .005 | 0 | y | 79928.999 | 142560 | 12.906 | 11.902 | 1.136 | H1-1a |
| 640 | 11 | M50 | WT6X15 | .274 | 5.922 | .005 | 0 | y | 79928.999 | 142560 | 12.906 | 11.902 | 1.136 | H1-1a |
| 641 | 11 | M51 | WT6X15 | .279 | 6.26 | .004 | 0 | y | 76128.484 | 142560 | 12.906 | 11.902 | 1.136 | H1-1a |
| 642 | 11 | M52 | WT6X15 | .058 | 0 | .005 | 12.787 | y | 76128.484 | 142560 | 12.906 | 11.902 | 1.136 | H1-1b* |
| 643 | 11 | M53 | WT6X15 | .072 | 6.005 | .004 | 12.011 | y | 80394.207 | 142560 | 12.906 | 11.902 | 1.136 | H1-1b |
| 644 | 11 | M54 | WT6X15 | .046 | 6.005 | .004 | 0 | y | 80394.207 | 142560 | 12.906 | 11.902 | 1.136 | H1-1b |
| 645 | 11 | M55 | WT6X15 | .273 | 6.308 | .005 | 0 | y | 75583.143 | 142560 | 12.906 | 11.902 | 1.136 | H1-1a |
| 646 | 11 | M56 | WT6X15 | .029 | 6.443 | .006 | 12.885 | y | 75583.143 | 142560 | 12.906 | 11.902 | 1.136 | H1-1b |
| 647 | 11 | M57 | WT6X15 | .068 | 6.07 | .005 | 12.139 | y | 79692.549 | 142560 | 12.906 | 11.902 | 1.136 | H1-1b |
| 648 | 11 | M58 | WT6X15 | .032 | 6.07 | .005 | 0 | y | 79692.549 | 142560 | 12.906 | 11.902 | 1.136 | H1-1b |
| 649 | 11 | M59 | WT6X15 | .156 | 0 | .005 | 0 | y | 76397.946 | 142560 | 12.906 | 11.902 | 1.136 | H1-1b* |
| 650 | 11 | M60 | WT6X15 | .027 | 6.369 | .006 | 0 | y | 76397.946 | 142560 | 12.906 | 11.902 | 1.136 | H1-1b |
| 651 | 11 | M61 | WT6X15 | .114 | 6.07 | .005 | 0 | y | 79692.549 | 142560 | 12.906 | 11.902 | 1.136 | H1-1b |
| 652 | 11 | M62 | WT6X15 | .056 | 0 | .004 | 12.139 | y | 79692.549 | 142560 | 12.906 | 11.902 | 1.136 | H1-1b* |
| 653 | 11 | M63 | WT6X15 | .332 | 6.236 | .003 | 0 | y | 76397.946 | 142560 | 12.906 | 11.902 | 1.136 | H1-1a |
| 654 | 11 | M64 | WT6X15 | .032 | 6.369 | .005 | 12.738 | y | 76397.946 | 142560 | 12.906 | 11.902 | 1.136 | H1-1b |
| 655 | 11 | M65 | WT6X15 | .027 | 5.741 | .006 | 0 | y | 83252.56 | 142560 | 12.906 | 11.902 | 1.136 | H1-1b |
| 656 | 11 | M66 | WT6X15 | .037 | 5.741 | .009 | 11.482 | y | 83252.56 | 142560 | 12.906 | 11.902 | 1.136 | H1-1b |
| 657 | 11 | M71 | HSS8X4X4 | .009 | 0 | .002 | 0 | y | 102691.6... | 169776 | 22.14 | 35.91 | 2.382 | H1-1b |
| 658 | 11 | M72 | HSS8X4X4 | .009 | 13.5 | .002 | 13.5 | y | 102691.6... | 169776 | 22.14 | 35.91 | 2.381 | H1-1b |
| 659 | 11 | M75 | HSS6X4X4 | .021 | 18.182 | .003 | 18.182 | y | 52673.992 | 139320 | 17.415 | 23.031 | 2.381 | H1-1b |
| 660 | 11 | M76 | HSS6X4X4 | .021 | 18.182 | .003 | 18.182 | y | 52673.992 | 139320 | 17.415 | 23.031 | 2.381 | H1-1b |
| 661 | 11 | M77 | HSS6X4X4 | .019 | 0 | .003 | 0 | y | 57728.58 | 139320 | 17.415 | 23.031 | 2.381 | H1-1b |
| 662 | 11 | M76A | L4x4x5/16 w... | .015 | 0 | .001 | 7.571 | y | 59982.319 | 122790.8... | 5.57 | 9.968 | 3.028 | H2-1 |
| 663 | 11 | M77A | L4x4x5/16 w... | .018 | 7.571 | .001 | 7.571 | y | 59982.319 | 122790.8... | 5.57 | 9.968 | 3.082 | H2-1 |
| 664 | 11 | M78 | L4x4x5/16 w... | .052 | 14.72 | .002 | 14.72 | y | 16644.398 | 122790.8... | 5.57 | 9.968 | 2.642 | H2-1 |
| 665 | 11 | M79 | L4x4x5/16 w... | .075 | 14.72 | .002 | 0 | y | 16644.398 | 122790.8... | 5.57 | 9.968 | 2.608 | H2-1 |
| 666 | 11 | M84 | PIPE_3.0 | .091 | 0 | .023 | 0 | | 28250.611 | 65205 | 5.749 | 5.749 | 1.606 | H1-1b |
| 667 | 11 | M85 | PIPE_3.0 | .092 | 12.5 | .022 | 12.5 | | 28250.611 | 65205 | 5.749 | 5.749 | 1.612 | H1-1b |
| 668 | 11 | M86 | PIPE_3.0 | .115 | 12.5 | .003 | 12.5 | | 28250.554 | 65205 | 5.749 | 5.749 | 1.228 | H1-1b |
| 669 | 11 | M87 | HSS4x0.250 | .353 | 0 | .042 | 0 | | 71625.082 | 89424 | 8.937 | 8.937 | 2.178 | H1-1b |
| 670 | 11 | M88 | HSS4x0.250 | .087 | 0 | .007 | 0 | | 71625.341 | 89424 | 8.937 | 8.937 | 1.981 | H1-1b |
| 671 | 11 | M89 | HSS4x0.250 | .358 | 0 | .042 | 0 | | 71625.082 | 89424 | 8.937 | 8.937 | 2.177 | H1-1b |
| 672 | 12 | M1 | W24x68 w1... | .299 | 0 | .057 | 0 | y | 1.73781e... | 2.33302e... | 564.878 | 2134.343 | 2.949 | H1-1b |
| 673 | 12 | M2 | W24x68 w1... | .195 | 0 | .042 | .99 | y | 1.73781e... | 2.33302e... | 564.878 | 2134.343 | 1.578 | H1-1b |
| 674 | 12 | M3 | W24X68 | .462 | 4.4 | .019 | 1.886 | z | 492994.2... | 904500 | 91.875 | 190.898 | 2.544 | H1-1a |
| 675 | 12 | M4 | W24X68 | .233 | 0 | .041 | 0 | y | 492994.2... | 904500 | 91.875 | 225.878 | 3.01 | H1-1b |

## Member AISC 14th(360-10): LRFD Steel Code Checks (Continued)

| | LC | Member | Shape | UC Max | Loc[ft] | Shear UC | Loc[ft] | Dir | phi*Pnc[lb] | phi*Pnt[lb] | phi*Mnyy... | phi*Mnzz... | Cb | Eqn |
|---|---|---|---|---|---|---|---|---|---|---|---|---|---|---|
| 676 | 12 | M5 | HSS18x0.500 | .225 | 0 | .021 | 0 | | 687685.7... | 806400 | 375.375 | 375.375 | 2.314 | H1-1b |
| 677 | 12 | M6 | HSS18x0.500 | .097 | 3.175 | .017 | 17.318 | | 696116.0... | 806400 | 375.375 | 375.375 | 2.411 | H1-1b |
| 678 | 12 | M7 | HSS18x0.500 | .367 | 16.91 | .054 | 16.91 | | 690364.7... | 806400 | 375.375 | 375.375 | 1.48 | H1-1b |
| 679 | 12 | M8 | HSS18x0.500 | .226 | 0 | .019 | 0 | | 711671.5... | 806400 | 375.375 | 375.375 | 1.835 | H1-1b |
| 680 | 12 | M29 | L5X5X6 | .073 | 6.822 | .004 | 0 | y | 29906.084 | 118260 | 7.418 | 12.233 | 1.136 | H2-1 |
| 681 | 12 | M30 | L5X5X6 | .073 | 6.822 | .004 | 0 | z | 29906.084 | 118260 | 7.418 | 12.233 | 1.136 | H2-1 |
| 682 | 12 | M31 | L5X5X6 | .056 | 6.822 | .003 | 0 | y | 29906.084 | 118260 | 7.418 | 12.233 | 1.136 | H2-1 |
| 683 | 12 | M32 | L5X5X6 | .056 | 6.822 | .003 | 0 | z | 29906.084 | 118260 | 7.418 | 12.233 | 1.136 | H2-1 |
| 684 | 12 | M33 | L5X5X6 | .058 | 6.822 | .003 | 0 | y | 29906.084 | 118260 | 7.418 | 12.233 | 1.136 | H2-1 |
| 685 | 12 | M34 | L5X5X6 | .058 | 6.822 | .003 | 0 | z | 29906.084 | 118260 | 7.418 | 12.233 | 1.136 | H2-1 |
| 686 | 12 | M35 | L5X5X6 | .065 | 6.822 | .003 | 0 | y | 29906.084 | 118260 | 7.418 | 12.233 | 1.136 | H2-1 |
| 687 | 12 | M36 | L5X5X6 | .065 | 6.822 | .003 | 0 | z | 29906.084 | 118260 | 7.418 | 12.233 | 1.136 | H2-1 |
| 688 | 12 | M37 | L5X5X6 | .066 | 6.822 | .003 | 0 | y | 29906.084 | 118260 | 7.418 | 12.233 | 1.136 | H2-1 |
| 689 | 12 | M38 | L5X5X6 | .066 | 6.822 | .003 | 0 | z | 29906.084 | 118260 | 7.418 | 12.233 | 1.136 | H2-1 |
| 690 | 12 | M39 | L5X5X6 | .107 | 7.613 | .003 | 15.226 | y | 74549.701 | 118260 | 7.418 | 11.768 | 1.136 | H2-1 |
| 691 | 12 | M40 | L5X5X6 | .126 | 7.613 | .003 | 0 | y | 74549.701 | 118260 | 7.418 | 11.768 | 1.136 | H2-1 |
| 692 | 12 | M41 | L5X5X6 | .121 | 7.613 | .003 | 15.226 | y | 24012.917 | 118260 | 7.418 | 11.768 | 1.136 | H2-1 |
| 693 | 12 | M42 | L5X5X6 | .162 | 7.613 | .003 | 0 | y | 74549.701 | 118260 | 7.418 | 11.768 | 1.136 | H2-1 |
| 694 | 12 | M43 | L3.5X3.5X5 | .621 | 9.699 | .003 | 0 | y | 15754.264 | 68040 | 2.882 | 3.881 | 1.136 | H2-1 |
| 695 | 12 | M44 | L3.5X3.5X5 | .171 | 9.906 | .003 | 0 | y | 15754.264 | 68040 | 2.882 | 3.881 | 1.136 | H2-1 |
| 696 | 12 | M45 | L5x5x3/8 wH... | .471 | 15.848 | .004 | 0 | y | 30839.58 | 170301.5... | 10.651 | 7.793 | 1.136 | H2-1 |
| 697 | 12 | M46 | L5x5x3/8 wH... | .200 | 16.185 | .004 | 0 | y | 30839.58 | 170301.5... | 10.651 | 7.793 | 1.136 | H2-1 |
| 698 | 12 | M47 | WT6X15 | .401 | 6.201 | .005 | 12.666 | y | 76798.045 | 142560 | 12.906 | 11.902 | 1.136 | H1-1a |
| 699 | 12 | M48 | WT6X15 | .060 | 12.666 | .006 | 12.666 | y | 76798.045 | 142560 | 12.906 | 7.439 | 1.753 | H1-1b |
| 700 | 12 | M49 | WT6X15 | .247 | 6.048 | .004 | 0 | y | 79928.999 | 142560 | 12.906 | 11.902 | 1.136 | H1-1a |
| 701 | 12 | M50 | WT6X15 | .032 | 6.048 | .004 | 0 | y | 79928.999 | 142560 | 12.906 | 11.902 | 1.136 | H1-1b |
| 702 | 12 | M51 | WT6X15 | .344 | 6.26 | .004 | 12.787 | y | 76128.484 | 142560 | 12.906 | 11.902 | 1.136 | H1-1a |
| 703 | 12 | M52 | WT6X15 | .235 | 6.26 | .004 | 12.787 | y | 76128.484 | 142560 | 12.906 | 11.902 | 1.136 | H1-1a |
| 704 | 12 | M53 | WT6X15 | .091 | 6.005 | .004 | 12.011 | y | 80394.207 | 142560 | 12.906 | 11.902 | 1.136 | H1-1b |
| 705 | 12 | M54 | WT6X15 | .078 | 6.005 | .003 | 12.011 | y | 80394.207 | 142560 | 12.906 | 11.902 | 1.136 | H1-1b |
| 706 | 12 | M55 | WT6X15 | .309 | 6.308 | .004 | 0 | y | 75583.143 | 142560 | 12.906 | 11.902 | 1.136 | H1-1a |
| 707 | 12 | M56 | WT6X15 | .153 | 0 | .004 | 0 | y | 75583.143 | 142560 | 12.906 | 11.902 | 1.136 | H1-1b* |
| 708 | 12 | M57 | WT6X15 | .079 | 6.07 | .004 | 12.139 | y | 79692.549 | 142560 | 12.906 | 11.902 | 1.136 | H1-1b |
| 709 | 12 | M58 | WT6X15 | .059 | 6.07 | .004 | 12.139 | y | 79692.549 | 142560 | 12.906 | 11.902 | 1.136 | H1-1b |
| 710 | 12 | M59 | WT6X15 | .173 | 0 | .004 | 12.738 | y | 76397.946 | 142560 | 12.906 | 11.902 | 1.136 | H1-1b* |
| 711 | 12 | M60 | WT6X15 | .084 | 0 | .005 | 12.738 | y | 76397.946 | 142560 | 12.906 | 11.902 | 1.136 | H1-1b* |
| 712 | 12 | M61 | WT6X15 | .115 | 6.07 | .004 | 0 | y | 79692.549 | 142560 | 12.906 | 11.902 | 1.136 | H1-1b |
| 713 | 12 | M62 | WT6X15 | .055 | 6.07 | .003 | 0 | y | 79692.549 | 142560 | 12.906 | 11.902 | 1.136 | H1-1b |
| 714 | 12 | M63 | WT6X15 | .348 | 6.236 | .005 | 12.738 | y | 76397.946 | 142560 | 12.906 | 11.902 | 1.136 | H1-1a |
| 715 | 12 | M64 | WT6X15 | .137 | 0 | .005 | 12.738 | y | 76397.946 | 142560 | 12.906 | 11.902 | 1.136 | H1-1b* |
| 716 | 12 | M65 | WT6X15 | .036 | 5.741 | .003 | 11.482 | y | 83252.56 | 142560 | 12.906 | 11.902 | 1.136 | H1-1b |
| 717 | 12 | M66 | WT6X15 | .043 | 5.741 | .008 | 0 | y | 83252.56 | 142560 | 12.906 | 11.902 | 1.136 | H1-1b |
| 718 | 12 | M71 | HSS8X4X4 | .009 | 0 | .002 | 0 | y | 102691.6... | 169776 | 22.14 | 35.91 | 2.381 | H1-1b |
| 719 | 12 | M72 | HSS8X4X4 | .009 | 13.5 | .002 | 13.5 | y | 102691.6... | 169776 | 22.14 | 35.91 | 2.381 | H1-1b |
| 720 | 12 | M75 | HSS6X4X4 | .021 | 18.182 | .003 | 18.182 | y | 52673.992 | 139320 | 17.415 | 23.031 | 2.381 | H1-1b |
| 721 | 12 | M76 | HSS6X4X4 | .021 | 18.182 | .003 | 18.182 | y | 52673.992 | 139320 | 17.415 | 23.031 | 2.381 | H1-1b |
| 722 | 12 | M77 | HSS6X4X4 | .019 | 0 | .003 | 0 | y | 57728.58 | 139320 | 17.415 | 23.031 | 2.381 | H1-1b |
| 723 | 12 | M76A | L4x4x5/16 w... | .013 | 0 | .001 | 7.571 | y | 59982.319 | 122790.8... | 5.57 | 9.968 | 3.203 | H2-1 |
| 724 | 12 | M77A | L4x4x5/16 w... | .019 | 0 | .001 | 0 | y | 59982.319 | 122790.8... | 5.57 | 9.968 | 3.27 | H2-1 |
| 725 | 12 | M78 | L4x4x5/16 w... | .052 | 0 | .002 | 0 | y | 16644.398 | 122790.8... | 5.57 | 9.968 | 2.511 | H2-1 |
| 726 | 12 | M79 | L4x4x5/16 w... | .065 | 0 | .002 | 0 | y | 16644.398 | 122790.8... | 5.57 | 9.968 | 2.476 | H2-1 |
| 727 | 12 | M84 | PIPE_3.0 | .089 | 0 | .023 | 0 | | 28250.611 | 65205 | 5.749 | 5.749 | 1.614 | H1-1b |

## Member AISC 14th(360-10): LRFD Steel Code Checks (Continued)

| | LC | Member | Shape | UC Max | Loc[ft] | Shear UC | Loc[ft] | Dir | phi*Pnc[lb] | phi*Pnt[lb] | phi*Mnyy... | phi*Mnzz... | Cb | Eqn |
|---|---|---|---|---|---|---|---|---|---|---|---|---|---|---|
| 728 | 12 | M85 | PIPE_3.0 | .085 | 12.5 | .022 | 12.5 | | 28250.611 | 65205 | 5.749 | 5.749 | 1.618 | H1-1b |
| 729 | 12 | M86 | PIPE_3.0 | .119 | 12.5 | .003 | 12.5 | | 28250.554 | 65205 | 5.749 | 5.749 | 1.227 | H1-1b |
| 730 | 12 | M87 | HSS4x0.250 | .348 | 0 | .041 | 0 | | 71625.082 | 89424 | 8.937 | 8.937 | 2.178 | H1-1b |
| 731 | 12 | M88 | HSS4x0.250 | .064 | 0 | .006 | 0 | | 71625.341 | 89424 | 8.937 | 8.937 | 1.97 | H1-1b |
| 732 | 12 | M89 | HSS4x0.250 | .347 | 0 | .041 | 0 | | 71625.082 | 89424 | 8.937 | 8.937 | 2.177 | H1-1b |
| 733 | 13 | M1 | W24x68 w1... | .049 | 0 | .012 | 0 | y | 1.73781e... | 2.33302e... | 564.878 | 2134.343 | 1.954 | H1-1b |
| 734 | 13 | M2 | W24x68 w1... | .052 | 0 | .012 | 2.177 | y | 1.73781e... | 2.33302e... | 564.878 | 2134.343 | 1.964 | H1-1b |
| 735 | 13 | M3 | W24X68 | .076 | 0 | .003 | 0 | y | 492994.2... | 904500 | 91.875 | 151.366 | 2.017 | H1-1b |
| 736 | 13 | M4 | W24X68 | .084 | 0 | .003 | 0 | y | 492994.2... | 904500 | 91.875 | 151.427 | 2.018 | H1-1b* |
| 737 | 13 | M5 | HSS18x0.500 | .034 | 0 | .003 | 0 | | 687685.7... | 806400 | 375.375 | 375.375 | 1.413 | H1-1b |
| 738 | 13 | M6 | HSS18x0.500 | .018 | 27.708 | .004 | 17.318 | | 696116.0... | 806400 | 375.375 | 375.375 | 1.185 | H1-1b |
| 739 | 13 | M7 | HSS18x0.500 | .124 | 17.206 | .017 | 16.91 | | 690364.7... | 806400 | 375.375 | 375.375 | 2.204 | H1-1b |
| 740 | 13 | M8 | HSS18x0.500 | .085 | 0 | .005 | 0 | | 711671.5... | 806400 | 375.375 | 375.375 | 1.667 | H1-1b |
| 741 | 13 | M29 | L5X5X6 | .065 | 6.822 | .003 | 0 | y | 29906.084 | 118260 | 7.418 | 12.233 | 1.136 | H2-1 |
| 742 | 13 | M30 | L5X5X6 | .065 | 6.822 | .003 | 0 | z | 29906.084 | 118260 | 7.418 | 12.233 | 1.136 | H2-1 |
| 743 | 13 | M31 | L5X5X6 | .063 | 6.822 | .003 | 0 | y | 29906.084 | 118260 | 7.418 | 12.233 | 1.136 | H2-1 |
| 744 | 13 | M32 | L5X5X6 | .063 | 6.822 | .003 | 0 | z | 29906.084 | 118260 | 7.418 | 12.233 | 1.136 | H2-1 |
| 745 | 13 | M33 | L5X5X6 | .065 | 6.822 | .003 | 0 | y | 29906.084 | 118260 | 7.418 | 12.233 | 1.136 | H2-1 |
| 746 | 13 | M34 | L5X5X6 | .065 | 6.822 | .003 | 0 | z | 29906.084 | 118260 | 7.418 | 12.233 | 1.136 | H2-1 |
| 747 | 13 | M35 | L5X5X6 | .065 | 6.822 | .003 | 0 | y | 29906.084 | 118260 | 7.418 | 12.233 | 1.136 | H2-1 |
| 748 | 13 | M36 | L5X5X6 | .065 | 6.822 | .003 | 0 | z | 29906.084 | 118260 | 7.418 | 12.233 | 1.136 | H2-1 |
| 749 | 13 | M37 | L5X5X6 | .060 | 6.822 | .003 | 0 | y | 29906.084 | 118260 | 7.418 | 12.233 | 1.136 | H2-1 |
| 750 | 13 | M38 | L5X5X6 | .060 | 6.822 | .003 | 0 | z | 29906.084 | 118260 | 7.418 | 12.233 | 1.136 | H2-1 |
| 751 | 13 | M39 | L5X5X6 | .069 | 7.613 | .003 | 0 | y | 74549.701 | 118260 | 7.418 | 11.768 | 1.136 | H2-1 |
| 752 | 13 | M40 | L5X5X6 | .068 | 7.613 | .003 | 0 | y | 74549.701 | 118260 | 7.418 | 11.768 | 1.136 | H2-1 |
| 753 | 13 | M41 | L5X5X6 | .071 | 7.454 | .003 | 0 | y | 24012.917 | 118260 | 7.418 | 11.768 | 1.136 | H2-1 |
| 754 | 13 | M42 | L5X5X6 | .068 | 7.613 | .003 | 0 | y | 74549.701 | 118260 | 7.418 | 11.768 | 1.136 | H2-1 |
| 755 | 13 | M43 | L3.5X3.5X5 | .207 | 9.699 | .003 | 0 | y | 15754.264 | 68040 | 2.882 | 3.881 | 1.136 | H2-1 |
| 756 | 13 | M44 | L3.5X3.5X5 | .216 | 9.699 | .003 | 0 | y | 15754.264 | 68040 | 2.882 | 3.881 | 1.136 | H2-1 |
| 757 | 13 | M45 | L5x5x3/8 wH... | .275 | 15.848 | .005 | 0 | y | 30839.58 | 170301.5... | 10.651 | 7.793 | 1.136 | H2-1 |
| 758 | 13 | M46 | L5x5x3/8 wH... | .282 | 15.848 | .005 | 0 | y | 30839.58 | 170301.5... | 10.651 | 7.793 | 1.136 | H2-1 |
| 759 | 13 | M47 | WT6X15 | .054 | 6.333 | .003 | 12.666 | y | 76798.045 | 142560 | 12.906 | 11.902 | 1.136 | H1-1b |
| 760 | 13 | M48 | WT6X15 | .078 | 0 | .004 | 0 | y | 76798.045 | 142560 | 12.906 | 7.439 | 2.509 | H1-1b |
| 761 | 13 | M49 | WT6X15 | .041 | 6.048 | .003 | 0 | y | 79928.999 | 142560 | 12.906 | 11.902 | 1.136 | H1-1b |
| 762 | 13 | M50 | WT6X15 | .041 | 6.048 | .003 | 12.096 | y | 79928.999 | 142560 | 12.906 | 11.902 | 1.136 | H1-1b |
| 763 | 13 | M51 | WT6X15 | .071 | 0 | .003 | 0 | y | 76128.484 | 142560 | 12.906 | 11.902 | 1.136 | H1-1b* |
| 764 | 13 | M52 | WT6X15 | .068 | 0 | .003 | 0 | y | 76128.484 | 142560 | 12.906 | 11.902 | 1.136 | H1-1b* |
| 765 | 13 | M53 | WT6X15 | .043 | 6.005 | .003 | 0 | y | 80394.207 | 142560 | 12.906 | 11.902 | 1.136 | H1-1b |
| 766 | 13 | M54 | WT6X15 | .042 | 6.005 | .003 | 0 | y | 80394.207 | 142560 | 12.906 | 11.902 | 1.136 | H1-1b |
| 767 | 13 | M55 | WT6X15 | .062 | 0 | .003 | 12.885 | y | 75583.143 | 142560 | 12.906 | 11.902 | 1.136 | H1-1b* |
| 768 | 13 | M56 | WT6X15 | .059 | 0 | .003 | 12.885 | y | 75583.143 | 142560 | 12.906 | 11.902 | 1.136 | H1-1b* |
| 769 | 13 | M57 | WT6X15 | .039 | 6.07 | .003 | 0 | y | 79692.549 | 142560 | 12.906 | 11.902 | 1.136 | H1-1b |
| 770 | 13 | M58 | WT6X15 | .038 | 6.07 | .003 | 12.139 | y | 79692.549 | 142560 | 12.906 | 11.902 | 1.136 | H1-1b |
| 771 | 13 | M59 | WT6X15 | .043 | 6.369 | .004 | 0 | y | 76397.946 | 142560 | 12.906 | 11.902 | 1.136 | H1-1b |
| 772 | 13 | M60 | WT6X15 | .042 | 6.369 | .004 | 12.738 | y | 76397.946 | 142560 | 12.906 | 11.902 | 1.136 | H1-1b |
| 773 | 13 | M61 | WT6X15 | .046 | 6.07 | .004 | 0 | y | 79692.549 | 142560 | 12.906 | 11.902 | 1.136 | H1-1b |
| 774 | 13 | M62 | WT6X15 | .046 | 6.07 | .004 | 0 | y | 79692.549 | 142560 | 12.906 | 11.902 | 1.136 | H1-1b |
| 775 | 13 | M63 | WT6X15 | .073 | 0 | .004 | 0 | y | 76397.946 | 142560 | 12.906 | 11.902 | 1.136 | H1-1b* |
| 776 | 13 | M64 | WT6X15 | .070 | 0 | .004 | 12.738 | y | 76397.946 | 142560 | 12.906 | 11.902 | 1.136 | H1-1b* |
| 777 | 13 | M65 | WT6X15 | .029 | 5.741 | .004 | 11.482 | y | 83252.56 | 142560 | 12.906 | 11.902 | 1.136 | H1-1b |
| 778 | 13 | M66 | WT6X15 | .028 | 5.741 | .004 | 0 | y | 83252.56 | 142560 | 12.906 | 11.902 | 1.136 | H1-1b |
| 779 | 13 | M71 | HSS8X4X4 | .010 | 0 | .002 | 0 | y | 102691.6... | 169776 | 22.14 | 35.91 | 2.381 | H1-1b |

## Member AISC 14th(360-10): LRFD Steel Code Checks (Continued)

| | LC | Member | Shape | UC Max | Loc[ft] | Shear UC | Loc[ft] | Dir | phi*Pnc[lb] | phi*Pnt[lb] | phi*Mnyy... | phi*Mnzz... | Cb | Eqn |
|---|---|---|---|---|---|---|---|---|---|---|---|---|---|---|
| 780 | 13 | M72 | HSS8X4X4 | .010 | 13.5 | .002 | 13.5 | y | 102691.6... | 169776 | 22.14 | 35.91 | 2.381 | H1-1b |
| 781 | 13 | M75 | HSS6X4X4 | .024 | 0 | .004 | 0 | y | 52673.992 | 139320 | 17.415 | 23.031 | 2.381 | H1-1b |
| 782 | 13 | M76 | HSS6X4X4 | .024 | 18.182 | .004 | 18.182 | y | 52673.992 | 139320 | 17.415 | 23.031 | 2.381 | H1-1b |
| 783 | 13 | M77 | HSS6X4X4 | .022 | 0 | .004 | 0 | y | 57728.58 | 139320 | 17.415 | 23.031 | 2.381 | H1-1b |
| 784 | 13 | M76A | L4x4x5/16 w... | .012 | 7.571 | .001 | 7.571 | y | 59982.319 | 122790.8... | 5.57 | 9.968 | 1.783 | H2-1 |
| 785 | 13 | M77A | L4x4x5/16 w... | .013 | 7.571 | .001 | 7.571 | y | 59982.319 | 122790.8... | 5.57 | 9.968 | 2.133 | H2-1 |
| 786 | 13 | M78 | L4x4x5/16 w... | .098 | 14.72 | .002 | 14.72 | y | 16644.398 | 122790.8... | 5.57 | 9.968 | 2.48 | H2-1 |
| 787 | 13 | M79 | L4x4x5/16 w... | .097 | 14.72 | .002 | 14.72 | y | 16644.398 | 122790.8... | 5.57 | 9.968 | 2.467 | H2-1 |
| 788 | 13 | M84 | PIPE_3.0 | .221 | 0 | .022 | 0 | | 28250.611 | 65205 | 5.749 | 5.749 | 1.184 | H1-1b |
| 789 | 13 | M85 | PIPE_3.0 | .221 | 12.5 | .022 | 12.5 | | 28250.611 | 65205 | 5.749 | 5.749 | 1.184 | H1-1b |
| 790 | 13 | M86 | PIPE_3.0 | .246 | 12.5 | .003 | 12.5 | | 28250.554 | 65205 | 5.749 | 5.749 | 1.1 | H1-1b |
| 791 | 13 | M87 | HSS4x0.250 | .790 | 0 | .069 | 0 | | 71625.082 | 89424 | 8.937 | 8.937 | 2.16 | H1-1b |
| 792 | 13 | M88 | HSS4x0.250 | .493 | 0 | .034 | 0 | | 71625.341 | 89424 | 8.937 | 8.937 | 2.186 | H1-1b |
| 793 | 13 | M89 | HSS4x0.250 | .790 | 0 | .069 | 0 | | 71625.082 | 89424 | 8.937 | 8.937 | 2.16 | H1-1b |
| 794 | 14 | M1 | W24x68 w1... | .045 | 0 | .009 | 0 | y | 1.73781e... | 2.33302e... | 564.878 | 2134.343 | 1.599 | H1-1b |
| 795 | 14 | M2 | W24x68 w1... | .073 | 0 | .013 | 10.094 | y | 1.73781e... | 2.33302e... | 564.878 | 2134.343 | 3.048 | H1-1b |
| 796 | 14 | M3 | W24X68 | .072 | 0 | .008 | 0 | y | 492994.2... | 904500 | 91.875 | 171.17 | 2.281 | H1-1b |
| 797 | 14 | M4 | W24X68 | .105 | 0 | .003 | 1.886 | z | 492994.2... | 904500 | 91.875 | 168.039 | 2.239 | H1-1b* |
| 798 | 14 | M5 | HSS18x0.500 | .038 | 0 | .004 | 0 | | 687685.7... | 806400 | 375.375 | 375.375 | 2.353 | H1-1b |
| 799 | 14 | M6 | HSS18x0.500 | .017 | 27.708 | .004 | 17.318 | | 696116.0... | 806400 | 375.375 | 375.375 | 2.24 | H1-1b |
| 800 | 14 | M7 | HSS18x0.500 | .123 | 17.206 | .016 | 16.91 | | 690364.7... | 806400 | 375.375 | 375.375 | 1.472 | H1-1b |
| 801 | 14 | M8 | HSS18x0.500 | .084 | 0 | .005 | 0 | | 711671.5... | 806400 | 375.375 | 375.375 | 1.818 | H1-1b |
| 802 | 14 | M29 | L5X5X6 | .065 | 6.822 | .003 | 0 | y | 29906.084 | 118260 | 7.418 | 12.233 | 1.136 | H2-1 |
| 803 | 14 | M30 | L5X5X6 | .065 | 6.822 | .003 | 0 | z | 29906.084 | 118260 | 7.418 | 12.233 | 1.136 | H2-1 |
| 804 | 14 | M31 | L5X5X6 | .063 | 6.822 | .003 | 0 | y | 29906.084 | 118260 | 7.418 | 12.233 | 1.136 | H2-1 |
| 805 | 14 | M32 | L5X5X6 | .063 | 6.822 | .003 | 0 | z | 29906.084 | 118260 | 7.418 | 12.233 | 1.136 | H2-1 |
| 806 | 14 | M33 | L5X5X6 | .065 | 6.822 | .003 | 0 | y | 29906.084 | 118260 | 7.418 | 12.233 | 1.136 | H2-1 |
| 807 | 14 | M34 | L5X5X6 | .065 | 6.822 | .003 | 0 | z | 29906.084 | 118260 | 7.418 | 12.233 | 1.136 | H2-1 |
| 808 | 14 | M35 | L5X5X6 | .065 | 6.822 | .003 | 0 | y | 29906.084 | 118260 | 7.418 | 12.233 | 1.136 | H2-1 |
| 809 | 14 | M36 | L5X5X6 | .065 | 6.822 | .003 | 0 | z | 29906.084 | 118260 | 7.418 | 12.233 | 1.136 | H2-1 |
| 810 | 14 | M37 | L5X5X6 | .060 | 6.822 | .003 | 0 | y | 29906.084 | 118260 | 7.418 | 12.233 | 1.136 | H2-1 |
| 811 | 14 | M38 | L5X5X6 | .060 | 6.822 | .003 | 0 | z | 29906.084 | 118260 | 7.418 | 12.233 | 1.136 | H2-1 |
| 812 | 14 | M39 | L5X5X6 | .084 | 7.613 | .003 | 15.226 | y | 74549.701 | 118260 | 7.418 | 11.768 | 1.136 | H2-1 |
| 813 | 14 | M40 | L5X5X6 | .077 | 7.613 | .003 | 15.226 | y | 74549.701 | 118260 | 7.418 | 11.768 | 1.136 | H2-1 |
| 814 | 14 | M41 | L5X5X6 | .137 | 7.454 | .003 | 15.226 | y | 24012.917 | 118260 | 7.418 | 11.768 | 1.136 | H2-1 |
| 815 | 14 | M42 | L5X5X6 | .081 | 7.613 | .003 | 0 | y | 74549.701 | 118260 | 7.418 | 11.768 | 1.136 | H2-1 |
| 816 | 14 | M43 | L3.5X3.5X5 | .142 | 9.906 | .003 | 19.812 | y | 15754.264 | 68040 | 2.882 | 3.881 | 1.136 | H2-1 |
| 817 | 14 | M44 | L3.5X3.5X5 | .288 | 9.699 | .003 | 19.812 | y | 15754.264 | 68040 | 2.882 | 3.881 | 1.136 | H2-1 |
| 818 | 14 | M45 | L5x5x3/8 wH... | .229 | 15.848 | .005 | 32.37 | y | 30839.58 | 170301.5... | 10.651 | 7.793 | 1.136 | H2-1 |
| 819 | 14 | M46 | L5x5x3/8 wH... | .323 | 15.848 | .005 | 0 | y | 30839.58 | 170301.5... | 10.651 | 7.793 | 1.136 | H2-1 |
| 820 | 14 | M47 | WT6X15 | .031 | 6.333 | .004 | 12.666 | y | 76798.045 | 142560 | 12.906 | 11.902 | 1.136 | H1-1b |
| 821 | 14 | M48 | WT6X15 | .122 | 0 | .005 | 0 | y | 76798.045 | 142560 | 12.906 | 7.439 | 2.561 | H1-1b |
| 822 | 14 | M49 | WT6X15 | .027 | 6.048 | .004 | 0 | y | 79928.999 | 142560 | 12.906 | 11.902 | 1.136 | H1-1b |
| 823 | 14 | M50 | WT6X15 | .051 | 6.048 | .004 | 12.096 | y | 79928.999 | 142560 | 12.906 | 11.902 | 1.136 | H1-1b |
| 824 | 14 | M51 | WT6X15 | .053 | 6.393 | .004 | 12.787 | y | 76128.484 | 142560 | 12.906 | 11.902 | 1.136 | H1-1b |
| 825 | 14 | M52 | WT6X15 | .072 | 0 | .004 | 0 | y | 76128.484 | 142560 | 12.906 | 11.902 | 1.136 | H1-1b* |
| 826 | 14 | M53 | WT6X15 | .039 | 6.005 | .003 | 0 | y | 80394.207 | 142560 | 12.906 | 11.902 | 1.136 | H1-1b |
| 827 | 14 | M54 | WT6X15 | .042 | 6.005 | .004 | 0 | y | 80394.207 | 142560 | 12.906 | 11.902 | 1.136 | H1-1b |
| 828 | 14 | M55 | WT6X15 | .048 | 6.443 | .004 | 0 | y | 75583.143 | 142560 | 12.906 | 11.902 | 1.136 | H1-1b |
| 829 | 14 | M56 | WT6X15 | .067 | 0 | .004 | 12.885 | y | 75583.143 | 142560 | 12.906 | 11.902 | 1.136 | H1-1b* |
| 830 | 14 | M57 | WT6X15 | .035 | 6.07 | .004 | 0 | y | 79692.549 | 142560 | 12.906 | 11.902 | 1.136 | H1-1b |
| 831 | 14 | M58 | WT6X15 | .039 | 6.07 | .004 | 0 | y | 79692.549 | 142560 | 12.906 | 11.902 | 1.136 | H1-1b |

## Member AISC 14th(360-10): LRFD Steel Code Checks (Continued)

| | LC | Member | Shape | UC Max | Loc[ft] | Shear UC | Loc[ft] | Dir | phi*Pnc[lb] | phi*Pnt[lb] | phi*Mnyy... | phi*Mnzz... | Cb | Eqn |
|---|---|---|---|---|---|---|---|---|---|---|---|---|---|---|
| 832 | 14 | M59 | WT6X15 | .036 | 6.369 | .004 | 12.738 | y | 76397.946 | 142560 | 12.906 | 11.902 | 1.136 | H1-1b |
| 833 | 14 | M60 | WT6X15 | .045 | 6.369 | .004 | 0 | y | 76397.946 | 142560 | 12.906 | 11.902 | 1.136 | H1-1b |
| 834 | 14 | M61 | WT6X15 | .038 | 6.07 | .003 | 12.139 | y | 79692.549 | 142560 | 12.906 | 11.902 | 1.136 | H1-1b |
| 835 | 14 | M62 | WT6X15 | .051 | 6.07 | .004 | 12.139 | y | 79692.549 | 142560 | 12.906 | 11.902 | 1.136 | H1-1b |
| 836 | 14 | M63 | WT6X15 | .049 | 6.369 | .004 | 0 | y | 76397.946 | 142560 | 12.906 | 11.902 | 1.136 | H1-1b |
| 837 | 14 | M64 | WT6X15 | .085 | 0 | .004 | 0 | y | 76397.946 | 142560 | 12.906 | 11.902 | 1.136 | H1-1b* |
| 838 | 14 | M65 | WT6X15 | .029 | 5.741 | .005 | 0 | y | 83252.56 | 142560 | 12.906 | 11.902 | 1.136 | H1-1b |
| 839 | 14 | M66 | WT6X15 | .027 | 5.741 | .004 | 11.482 | y | 83252.56 | 142560 | 12.906 | 11.902 | 1.136 | H1-1b |
| 840 | 14 | M71 | HSS8X4X4 | .010 | 13.5 | .002 | 13.5 | y | 102691.6... | 169776 | 22.14 | 35.91 | 2.381 | H1-1b |
| 841 | 14 | M72 | HSS8X4X4 | .010 | 0 | .002 | 0 | y | 102691.6... | 169776 | 22.14 | 35.91 | 2.381 | H1-1b |
| 842 | 14 | M75 | HSS6X4X4 | .024 | 0 | .004 | 0 | y | 52673.992 | 139320 | 17.415 | 23.031 | 2.381 | H1-1b |
| 843 | 14 | M76 | HSS6X4X4 | .024 | 18.182 | .004 | 18.182 | y | 52673.992 | 139320 | 17.415 | 23.031 | 2.381 | H1-1b |
| 844 | 14 | M77 | HSS6X4X4 | .022 | 17.321 | .004 | 17.321 | y | 57728.58 | 139320 | 17.415 | 23.031 | 2.381 | H1-1b |
| 845 | 14 | M76A | L4x4x5/16 w... | .012 | 7.571 | .001 | 7.571 | y | 59982.319 | 122790.8... | 5.57 | 9.968 | 1.549 | H2-1 |
| 846 | 14 | M77A | L4x4x5/16 w... | .013 | 7.571 | .001 | 7.571 | y | 59982.319 | 122790.8... | 5.57 | 9.968 | 1.776 | H2-1 |
| 847 | 14 | M78 | L4x4x5/16 w... | .099 | 14.72 | .002 | 14.72 | y | 16644.398 | 122790.8... | 5.57 | 9.968 | 2.465 | H2-1 |
| 848 | 14 | M79 | L4x4x5/16 w... | .097 | 14.72 | .002 | 14.72 | y | 16644.398 | 122790.8... | 5.57 | 9.968 | 2.481 | H2-1 |
| 849 | 14 | M84 | PIPE 3.0 | .221 | 0 | .022 | 0 | | 28250.611 | 65205 | 5.749 | 5.749 | 1.184 | H1-1b |
| 850 | 14 | M85 | PIPE 3.0 | .221 | 12.5 | .022 | 12.5 | | 28250.611 | 65205 | 5.749 | 5.749 | 1.184 | H1-1b |
| 851 | 14 | M86 | PIPE 3.0 | .246 | 0 | .003 | 0 | | 28250.554 | 65205 | 5.749 | 5.749 | 1.101 | H1-1b |
| 852 | 14 | M87 | HSS4x0.250 | .791 | 0 | .069 | 0 | | 71625.082 | 89424 | 8.937 | 8.937 | 2.16 | H1-1b |
| 853 | 14 | M88 | HSS4x0.250 | .493 | 0 | .034 | 0 | | 71625.341 | 89424 | 8.937 | 8.937 | 2.186 | H1-1b |
| 854 | 14 | M89 | HSS4x0.250 | .790 | 0 | .069 | 0 | | 71625.082 | 89424 | 8.937 | 8.937 | 2.16 | H1-1b |
| 855 | 15 | M1 | W24x68 w1... | .059 | 0 | .010 | 10.292 | y | 1.73781e... | 2.33302e... | 564.878 | 2134.343 | 1.31 | H1-1b |
| 856 | 15 | M2 | W24x68 w1... | .078 | 0 | .010 | 10.094 | y | 1.73781e... | 2.33302e... | 564.878 | 2134.343 | 1.531 | H1-1b |
| 857 | 15 | M3 | W24X68 | .062 | 0 | .011 | 0 | y | 492994.2... | 904500 | 91.875 | 182.611 | 2.433 | H1-1b |
| 858 | 15 | M4 | W24X68 | .114 | 4.4 | .008 | 1.886 | y | 492994.2... | 904500 | 91.875 | 212.109 | 2.826 | H1-1b |
| 859 | 15 | M5 | HSS18x0.500 | .039 | 0 | .006 | 0 | | 687685.7... | 806400 | 375.375 | 375.375 | 2.34 | H1-1b |
| 860 | 15 | M6 | HSS18x0.500 | .018 | 27.708 | .004 | 17.318 | | 696116.0... | 806400 | 375.375 | 375.375 | 2.309 | H1-1b |
| 861 | 15 | M7 | HSS18x0.500 | .116 | 17.206 | .016 | 16.91 | | 690364.7... | 806400 | 375.375 | 375.375 | 1.473 | H1-1b |
| 862 | 15 | M8 | HSS18x0.500 | .078 | 0 | .005 | 0 | | 711671.5... | 806400 | 375.375 | 375.375 | 1.818 | H1-1b |
| 863 | 15 | M29 | L5X5X6 | .063 | 6.822 | .004 | 0 | y | 29906.084 | 118260 | 7.418 | 12.233 | 1.136 | H2-1 |
| 864 | 15 | M30 | L5X5X6 | .063 | 6.822 | .004 | 0 | z | 29906.084 | 118260 | 7.418 | 12.233 | 1.136 | H2-1 |
| 865 | 15 | M31 | L5X5X6 | .063 | 6.822 | .003 | 0 | y | 29906.084 | 118260 | 7.418 | 12.233 | 1.136 | H2-1 |
| 866 | 15 | M32 | L5X5X6 | .063 | 6.822 | .003 | 0 | z | 29906.084 | 118260 | 7.418 | 12.233 | 1.136 | H2-1 |
| 867 | 15 | M33 | L5X5X6 | .065 | 6.822 | .003 | 0 | y | 29906.084 | 118260 | 7.418 | 12.233 | 1.136 | H2-1 |
| 868 | 15 | M34 | L5X5X6 | .065 | 6.822 | .003 | 0 | z | 29906.084 | 118260 | 7.418 | 12.233 | 1.136 | H2-1 |
| 869 | 15 | M35 | L5X5X6 | .065 | 6.822 | .003 | 0 | y | 29906.084 | 118260 | 7.418 | 12.233 | 1.136 | H2-1 |
| 870 | 15 | M36 | L5X5X6 | .065 | 6.822 | .003 | 0 | z | 29906.084 | 118260 | 7.418 | 12.233 | 1.136 | H2-1 |
| 871 | 15 | M37 | L5X5X6 | .061 | 6.822 | .003 | 0 | y | 29906.084 | 118260 | 7.418 | 12.233 | 1.136 | H2-1 |
| 872 | 15 | M38 | L5X5X6 | .061 | 6.822 | .003 | 0 | z | 29906.084 | 118260 | 7.418 | 12.233 | 1.136 | H2-1 |
| 873 | 15 | M39 | L5X5X6 | .095 | 7.613 | .004 | 0 | y | 74549.701 | 118260 | 7.418 | 11.768 | 1.136 | H2-1 |
| 874 | 15 | M40 | L5X5X6 | .084 | 7.613 | .003 | 0 | y | 74549.701 | 118260 | 7.418 | 11.768 | 1.136 | H2-1 |
| 875 | 15 | M41 | L5X5X6 | .184 | 7.454 | .003 | 15.226 | y | 24012.917 | 118260 | 7.418 | 11.768 | 1.136 | H2-1 |
| 876 | 15 | M42 | L5X5X6 | .091 | 7.613 | .003 | 15.226 | y | 74549.701 | 118260 | 7.418 | 11.768 | 1.136 | H2-1 |
| 877 | 15 | M43 | L3.5X3.5X5 | .157 | 9.906 | .003 | 19.812 | y | 15754.264 | 68040 | 2.882 | 3.881 | 1.136 | H2-1 |
| 878 | 15 | M44 | L3.5X3.5X5 | .333 | 9.699 | .003 | 19.812 | y | 15754.264 | 68040 | 2.882 | 3.881 | 1.136 | H2-1 |
| 879 | 15 | M45 | L5x5x3/8 wH... | .212 | 16.185 | .005 | 32.37 | y | 30839.58 | 170301.5... | 10.651 | 7.793 | 1.136 | H2-1 |
| 880 | 15 | M46 | L5x5x3/8 wH... | .347 | 15.848 | .005 | 0 | y | 30839.58 | 170301.5... | 10.651 | 7.793 | 1.136 | H2-1 |
| 881 | 15 | M47 | WT6X15 | .039 | 6.333 | .004 | 0 | y | 76798.045 | 142560 | 12.906 | 11.902 | 1.136 | H1-1b |
| 882 | 15 | M48 | WT6X15 | .144 | 0 | .006 | 0 | y | 76798.045 | 142560 | 12.906 | 7.439 | 2.608 | H1-1b |
| 883 | 15 | M49 | WT6X15 | .051 | 6.048 | .004 | 0 | y | 79928.999 | 142560 | 12.906 | 11.902 | 1.136 | H1-1b |

## Member AISC 14th(360-10): LRFD Steel Code Checks (Continued)

| | LC | Member | Shape | UC Max | Loc[ft] | Shear UC | Loc[ft] | Dir | phi*Pnc[lb] | phi*Pnt[lb] | phi*Mnyy... | phi*Mnzz... | Cb | Eqn |
|---|---|---|---|---|---|---|---|---|---|---|---|---|---|---|
| 884 | 15 | M50 | WT6X15 | .056 | 6.048 | .004 | 0 | y | 79928.999 | 142560 | 12.906 | 11.902 | 1.136 | H1-1b |
| 885 | 15 | M51 | WT6X15 | .037 | 6.393 | .004 | 12.787 | y | 76128.484 | 142560 | 12.906 | 11.902 | 1.136 | H1-1b |
| 886 | 15 | M52 | WT6X15 | .057 | 0 | .004 | 12.787 | y | 76128.484 | 142560 | 12.906 | 11.902 | 1.136 | H1-1b* |
| 887 | 15 | M53 | WT6X15 | .033 | 6.005 | .004 | 12.011 | y | 80394.207 | 142560 | 12.906 | 11.902 | 1.136 | H1-1b |
| 888 | 15 | M54 | WT6X15 | .037 | 6.005 | .004 | 12.011 | y | 80394.207 | 142560 | 12.906 | 11.902 | 1.136 | H1-1b |
| 889 | 15 | M55 | WT6X15 | .033 | 6.443 | .004 | 12.885 | y | 75583.143 | 142560 | 12.906 | 11.902 | 1.136 | H1-1b |
| 890 | 15 | M56 | WT6X15 | .059 | 0 | .004 | 12.885 | y | 75583.143 | 142560 | 12.906 | 11.902 | 1.136 | H1-1b* |
| 891 | 15 | M57 | WT6X15 | .030 | 6.07 | .004 | 12.139 | y | 79692.549 | 142560 | 12.906 | 11.902 | 1.136 | H1-1b |
| 892 | 15 | M58 | WT6X15 | .037 | 6.07 | .004 | 0 | y | 79692.549 | 142560 | 12.906 | 11.902 | 1.136 | H1-1b |
| 893 | 15 | M59 | WT6X15 | .029 | 6.369 | .004 | 0 | y | 76397.946 | 142560 | 12.906 | 11.902 | 1.136 | H1-1b |
| 894 | 15 | M60 | WT6X15 | .042 | 6.369 | .004 | 12.738 | y | 76397.946 | 142560 | 12.906 | 11.902 | 1.136 | H1-1b |
| 895 | 15 | M61 | WT6X15 | .027 | 6.07 | .004 | 0 | y | 79692.549 | 142560 | 12.906 | 11.902 | 1.136 | H1-1b |
| 896 | 15 | M62 | WT6X15 | .050 | 6.07 | .004 | 12.139 | y | 79692.549 | 142560 | 12.906 | 11.902 | 1.136 | H1-1b |
| 897 | 15 | M63 | WT6X15 | .030 | 6.369 | .004 | 12.738 | y | 76397.946 | 142560 | 12.906 | 11.902 | 1.136 | H1-1b |
| 898 | 15 | M64 | WT6X15 | .081 | 0 | .004 | 12.738 | y | 76397.946 | 142560 | 12.906 | 11.902 | 1.136 | H1-1b* |
| 899 | 15 | M65 | WT6X15 | .027 | 5.741 | .005 | 0 | y | 83252.56 | 142560 | 12.906 | 11.902 | 1.136 | H1-1b |
| 900 | 15 | M66 | WT6X15 | .026 | 5.741 | .004 | 0 | y | 83252.56 | 142560 | 12.906 | 11.902 | 1.136 | H1-1b |
| 901 | 15 | M71 | HSS8X4X4 | .010 | 13.5 | .002 | 13.5 | y | 102691.6... | 169776 | 22.14 | 35.91 | 2.381 | H1-1b |
| 902 | 15 | M72 | HSS8X4X4 | .010 | 0 | .002 | 0 | y | 102691.6... | 169776 | 22.14 | 35.91 | 2.381 | H1-1b |
| 903 | 15 | M75 | HSS6X4X4 | .024 | 0 | .004 | 0 | y | 52673.992 | 139320 | 17.415 | 23.031 | 2.381 | H1-1b |
| 904 | 15 | M76 | HSS6X4X4 | .024 | 18.182 | .004 | 18.182 | y | 52673.992 | 139320 | 17.415 | 23.031 | 2.381 | H1-1b |
| 905 | 15 | M77 | HSS6X4X4 | .022 | 17.321 | .004 | 17.321 | y | 57728.58 | 139320 | 17.415 | 23.031 | 2.381 | H1-1b |
| 906 | 15 | M76A | L4x4x5/16 w... | .012 | 7.571 | .001 | 7.571 | y | 59982.319 | 122790.8... | 5.57 | 9.968 | 1.485 | H2-1 |
| 907 | 15 | M77A | L4x4x5/16 w... | .014 | 7.571 | .001 | 7.571 | y | 59982.319 | 122790.8... | 5.57 | 9.968 | 1.58 | H2-1 |
| 908 | 15 | M78 | L4x4x5/16 w... | .101 | 14.72 | .002 | 14.72 | y | 16644.398 | 122790.8... | 5.57 | 9.968 | 2.456 | H2-1 |
| 909 | 15 | M79 | L4x4x5/16 w... | .099 | 14.72 | .002 | 14.72 | y | 16644.398 | 122790.8... | 5.57 | 9.968 | 2.516 | H2-1 |
| 910 | 15 | M84 | PIPE_3.0 | .222 | 0 | .022 | 0 | | 28250.611 | 65205 | 5.749 | 5.749 | 1.184 | H1-1b |
| 911 | 15 | M85 | PIPE_3.0 | .222 | 12.5 | .023 | 12.5 | | 28250.611 | 65205 | 5.749 | 5.749 | 1.184 | H1-1b |
| 912 | 15 | M86 | PIPE_3.0 | .245 | 0 | .003 | 0 | | 28250.554 | 65205 | 5.749 | 5.749 | 1.101 | H1-1b |
| 913 | 15 | M87 | HSS4x0.250 | .793 | 0 | .069 | 0 | | 71625.082 | 89424 | 8.937 | 8.937 | 2.16 | H1-1b |
| 914 | 15 | M88 | HSS4x0.250 | .491 | 0 | .034 | 0 | | 71625.341 | 89424 | 8.937 | 8.937 | 2.186 | H1-1b |
| 915 | 15 | M89 | HSS4x0.250 | .790 | 0 | .069 | 0 | | 71625.082 | 89424 | 8.937 | 8.937 | 2.16 | H1-1b |
| 916 | 16 | M1 | W24x68 w1... | .060 | 0 | .010 | 19 | y | 1.73781e... | 2.33302e... | 564.878 | 2134.343 | 1.169 | H1-1b |
| 917 | 16 | M2 | W24x68 w1... | .079 | 0 | .010 | 19 | y | 1.73781e... | 2.33302e... | 564.878 | 2134.343 | 1.199 | H1-1b |
| 918 | 16 | M3 | W24X68 | .053 | 0 | .011 | 1.886 | y | 492994.2... | 904500 | 91.875 | 203.923 | 2.717 | H1-1b |
| 919 | 16 | M4 | W24X68 | .109 | 5.028 | .011 | 1.886 | y | 492994.2... | 904500 | 91.875 | 238.846 | 3.182 | H1-1b |
| 920 | 16 | M5 | HSS18x0.500 | .055 | 0 | .006 | 0 | | 687685.7... | 806400 | 375.375 | 375.375 | 2.339 | H1-1b |
| 921 | 16 | M6 | HSS18x0.500 | .021 | 27.708 | .004 | 17.318 | | 696116.0... | 806400 | 375.375 | 375.375 | 2.32 | H1-1b |
| 922 | 16 | M7 | HSS18x0.500 | .102 | 16.91 | .014 | 16.91 | | 690364.7... | 806400 | 375.375 | 375.375 | 1.473 | H1-1b |
| 923 | 16 | M8 | HSS18x0.500 | .067 | 0 | .004 | 0 | | 711671.5... | 806400 | 375.375 | 375.375 | 1.818 | H1-1b |
| 924 | 16 | M29 | L5X5X6 | .061 | 6.822 | .004 | 0 | y | 29906.084 | 118260 | 7.418 | 12.233 | 1.136 | H2-1 |
| 925 | 16 | M30 | L5X5X6 | .061 | 6.822 | .004 | 0 | z | 29906.084 | 118260 | 7.418 | 12.233 | 1.136 | H2-1 |
| 926 | 16 | M31 | L5X5X6 | .063 | 6.822 | .003 | 0 | y | 29906.084 | 118260 | 7.418 | 12.233 | 1.136 | H2-1 |
| 927 | 16 | M32 | L5X5X6 | .063 | 6.822 | .003 | 0 | z | 29906.084 | 118260 | 7.418 | 12.233 | 1.136 | H2-1 |
| 928 | 16 | M33 | L5X5X6 | .064 | 6.822 | .003 | 0 | y | 29906.084 | 118260 | 7.418 | 12.233 | 1.136 | H2-1 |
| 929 | 16 | M34 | L5X5X6 | .064 | 6.822 | .003 | 0 | z | 29906.084 | 118260 | 7.418 | 12.233 | 1.136 | H2-1 |
| 930 | 16 | M35 | L5X5X6 | .064 | 6.822 | .003 | 0 | y | 29906.084 | 118260 | 7.418 | 12.233 | 1.136 | H2-1 |
| 931 | 16 | M36 | L5X5X6 | .064 | 6.822 | .003 | 0 | z | 29906.084 | 118260 | 7.418 | 12.233 | 1.136 | H2-1 |
| 932 | 16 | M37 | L5X5X6 | .061 | 6.822 | .003 | 0 | y | 29906.084 | 118260 | 7.418 | 12.233 | 1.136 | H2-1 |
| 933 | 16 | M38 | L5X5X6 | .061 | 6.822 | .003 | 0 | z | 29906.084 | 118260 | 7.418 | 12.233 | 1.136 | H2-1 |
| 934 | 16 | M39 | L5X5X6 | .099 | 7.613 | .004 | 0 | y | 74549.701 | 118260 | 7.418 | 11.768 | 1.136 | H2-1 |
| 935 | 16 | M40 | L5X5X6 | .086 | 7.613 | .003 | 0 | y | 74549.701 | 118260 | 7.418 | 11.768 | 1.136 | H2-1 |

## Member AISC 14th(360-10): LRFD Steel Code Checks (Continued)

| | LC | Member | Shape | UC Max | Loc[ft] | Shear UC | Loc[ft] | Dir | phi*Pnc[lb] | phi*Pnt[lb] | phi*Mnyy... | phi*Mnzz... | Cb | Eqn |
|---|---|---|---|---|---|---|---|---|---|---|---|---|---|---|
| 936 | 16 | M41 | L5X5X6 | .199 | 7.454 | .003 | 15.226 | y | 24012.917 | 118260 | 7.418 | 11.768 | 1.136 | H2-1 |
| 937 | 16 | M42 | L5X5X6 | .094 | 7.613 | .003 | 0 | y | 74549.701 | 118260 | 7.418 | 11.768 | 1.136 | H2-1 |
| 938 | 16 | M43 | L3.5X3.5X5 | .165 | 9.906 | .003 | 0 | y | 15754.264 | 68040 | 2.882 | 3.881 | 1.136 | H2-1 |
| 939 | 16 | M44 | L3.5X3.5X5 | .335 | 9.699 | .003 | 0 | y | 15754.264 | 68040 | 2.882 | 3.881 | 1.136 | H2-1 |
| 940 | 16 | M45 | L5x5x3/8 wH... | .215 | 16.185 | .005 | 0 | y | 30839.58 | 170301.5... | 10.651 | 7.793 | 1.136 | H2-1 |
| 941 | 16 | M46 | L5x5x3/8 wH... | .348 | 15.848 | .005 | 0 | y | 30839.58 | 170301.5... | 10.651 | 7.793 | 1.136 | H2-1 |
| 942 | 16 | M47 | WT6X15 | .048 | 6.333 | .004 | 0 | y | 76798.045 | 142560 | 12.906 | 11.902 | 1.136 | H1-1b |
| 943 | 16 | M48 | WT6X15 | .136 | 0 | .006 | 0 | y | 76798.045 | 142560 | 12.906 | 7.439 | 2.66 | H1-1b |
| 944 | 16 | M49 | WT6X15 | .084 | 0 | .004 | 12.096 | y | 79928.999 | 142560 | 12.906 | 11.902 | 1.136 | H1-1b* |
| 945 | 16 | M50 | WT6X15 | .053 | 6.048 | .004 | 12.096 | y | 79928.999 | 142560 | 12.906 | 11.902 | 1.136 | H1-1b |
| 946 | 16 | M51 | WT6X15 | .033 | 6.393 | .004 | 12.787 | y | 76128.484 | 142560 | 12.906 | 11.902 | 1.136 | H1-1b |
| 947 | 16 | M52 | WT6X15 | .043 | 6.393 | .004 | 0 | y | 76128.484 | 142560 | 12.906 | 11.902 | 1.136 | H1-1b |
| 948 | 16 | M53 | WT6X15 | .029 | 6.005 | .004 | 0 | y | 80394.207 | 142560 | 12.906 | 11.902 | 1.136 | H1-1b |
| 949 | 16 | M54 | WT6X15 | .031 | 6.005 | .004 | 0 | y | 80394.207 | 142560 | 12.906 | 11.902 | 1.136 | H1-1b |
| 950 | 16 | M55 | WT6X15 | .034 | 6.443 | .004 | 12.885 | y | 75583.143 | 142560 | 12.906 | 11.902 | 1.136 | H1-1b |
| 951 | 16 | M56 | WT6X15 | .047 | 6.443 | .004 | 12.885 | y | 75583.143 | 142560 | 12.906 | 11.902 | 1.136 | H1-1b |
| 952 | 16 | M57 | WT6X15 | .033 | 6.07 | .004 | 0 | y | 79692.549 | 142560 | 12.906 | 11.902 | 1.136 | H1-1b |
| 953 | 16 | M58 | WT6X15 | .032 | 6.07 | .004 | 12.139 | y | 79692.549 | 142560 | 12.906 | 11.902 | 1.136 | H1-1b |
| 954 | 16 | M59 | WT6X15 | .034 | 6.369 | .004 | 0 | y | 76397.946 | 142560 | 12.906 | 11.902 | 1.136 | H1-1b |
| 955 | 16 | M60 | WT6X15 | .035 | 6.369 | .004 | 0 | y | 76397.946 | 142560 | 12.906 | 11.902 | 1.136 | H1-1b |
| 956 | 16 | M61 | WT6X15 | .043 | 6.07 | .004 | 12.139 | y | 79692.549 | 142560 | 12.906 | 11.902 | 1.136 | H1-1b |
| 957 | 16 | M62 | WT6X15 | .045 | 6.07 | .004 | 12.139 | y | 79692.549 | 142560 | 12.906 | 11.902 | 1.136 | H1-1b |
| 958 | 16 | M63 | WT6X15 | .036 | 6.369 | .004 | 0 | y | 76397.946 | 142560 | 12.906 | 11.902 | 1.136 | H1-1b |
| 959 | 16 | M64 | WT6X15 | .060 | 0 | .004 | 12.738 | y | 76397.946 | 142560 | 12.906 | 11.902 | 1.136 | H1-1b* |
| 960 | 16 | M65 | WT6X15 | .027 | 5.741 | .005 | 11.482 | y | 83252.56 | 142560 | 12.906 | 11.902 | 1.136 | H1-1b |
| 961 | 16 | M66 | WT6X15 | .031 | 5.741 | .004 | 0 | y | 83252.56 | 142560 | 12.906 | 11.902 | 1.136 | H1-1b |
| 962 | 16 | M71 | HSS8X4X4 | .010 | 13.5 | .002 | 13.5 | y | 102691.6... | 169776 | 22.14 | 35.91 | 2.381 | H1-1b |
| 963 | 16 | M72 | HSS8X4X4 | .010 | 0 | .002 | 0 | y | 102691.6... | 169776 | 22.14 | 35.91 | 2.381 | H1-1b |
| 964 | 16 | M75 | HSS6X4X4 | .024 | 0 | .004 | 0 | y | 52673.992 | 139320 | 17.415 | 23.031 | 2.381 | H1-1b |
| 965 | 16 | M76 | HSS6X4X4 | .024 | 18.182 | .004 | 18.182 | y | 52673.992 | 139320 | 17.415 | 23.031 | 2.381 | H1-1b |
| 966 | 16 | M77 | HSS6X4X4 | .022 | 17.321 | .004 | 17.321 | y | 57728.58 | 139320 | 17.415 | 23.031 | 2.381 | H1-1b |
| 967 | 16 | M76A | L4x4x5/16 w... | .012 | 7.571 | .001 | 7.571 | y | 59982.319 | 122790.8... | 5.57 | 9.968 | 1.425 | H2-1 |
| 968 | 16 | M77A | L4x4x5/16 w... | .015 | 7.571 | .001 | 7.571 | y | 59982.319 | 122790.8... | 5.57 | 9.968 | 1.487 | H2-1 |
| 969 | 16 | M78 | L4x4x5/16 w... | .103 | 14.72 | .002 | 14.72 | y | 16644.398 | 122790.8... | 5.57 | 9.968 | 2.454 | H2-1 |
| 970 | 16 | M79 | L4x4x5/16 w... | .101 | 14.72 | .002 | 14.72 | y | 16644.398 | 122790.8... | 5.57 | 9.968 | 2.562 | H2-1 |
| 971 | 16 | M84 | PIPE_3.0 | .224 | 0 | .022 | 0 | | 28250.611 | 65205 | 5.749 | 5.749 | 1.184 | H1-1b |
| 972 | 16 | M85 | PIPE_3.0 | .222 | 12.5 | .023 | 12.5 | | 28250.611 | 65205 | 5.749 | 5.749 | 1.185 | H1-1b |
| 973 | 16 | M86 | PIPE_3.0 | .244 | 0 | .003 | 0 | | 28250.554 | 65205 | 5.749 | 5.749 | 1.101 | H1-1b |
| 974 | 16 | M87 | HSS4x0.250 | .795 | 0 | .069 | 0 | | 71625.082 | 89424 | 8.937 | 8.937 | 2.16 | H1-1b |
| 975 | 16 | M88 | HSS4x0.250 | .489 | 0 | .034 | 0 | | 71625.341 | 89424 | 8.937 | 8.937 | 2.186 | H1-1b |
| 976 | 16 | M89 | HSS4x0.250 | .790 | 0 | .069 | 0 | | 71625.082 | 89424 | 8.937 | 8.937 | 2.16 | H1-1b |
| 977 | 17 | M1 | W24x68 w1... | .057 | 0 | .008 | 2.771 | y | 1.73781e... | 2.33302e... | 564.878 | 2134.343 | 1.53 | H1-1b |
| 978 | 17 | M2 | W24x68 w1... | .071 | 0 | .010 | 10.292 | y | 1.73781e... | 2.33302e... | 564.878 | 2134.343 | 1.217 | H1-1b |
| 979 | 17 | M3 | W24X68 | .043 | 0 | .008 | 1.886 | y | 492994.2... | 904500 | 91.875 | 507.447 | 1 | H1-1b |
| 980 | 17 | M4 | W24X68 | .084 | 5.028 | .011 | .629 | y | 492994.2... | 904500 | 91.875 | 263.598 | 3.512 | H1-1b |
| 981 | 17 | M5 | HSS18x0.500 | .065 | 0 | .006 | 0 | | 687685.7... | 806400 | 375.375 | 375.375 | 2.342 | H1-1b |
| 982 | 17 | M6 | HSS18x0.500 | .043 | 0 | .003 | 3.175 | | 696116.0... | 806400 | 375.375 | 375.375 | 2.303 | H1-1b* |
| 983 | 17 | M7 | HSS18x0.500 | .081 | 16.91 | .010 | 16.91 | | 690364.7... | 806400 | 375.375 | 375.375 | 1.473 | H1-1b |
| 984 | 17 | M8 | HSS18x0.500 | .051 | 0 | .004 | 0 | | 711671.5... | 806400 | 375.375 | 375.375 | 1.818 | H1-1b |
| 985 | 17 | M29 | L5X5X6 | .066 | 6.822 | .004 | 0 | y | 29906.084 | 118260 | 7.418 | 12.233 | 1.136 | H2-1 |
| 986 | 17 | M30 | L5X5X6 | .066 | 6.822 | .004 | 0 | z | 29906.084 | 118260 | 7.418 | 12.233 | 1.136 | H2-1 |
| 987 | 17 | M31 | L5X5X6 | .062 | 6.822 | .003 | 0 | y | 29906.084 | 118260 | 7.418 | 12.233 | 1.136 | H2-1 |

## Member AISC 14th(360-10): LRFD Steel Code Checks (Continued)

| | LC | Member | Shape | UC Max | Loc[ft] | Shear UC | Loc[ft] | Dir | phi*Pnc[lb] | phi*Pnt[lb] | phi*Mnyy... | phi*Mnzz... | Cb | Eqn |
|---|---|---|---|---|---|---|---|---|---|---|---|---|---|---|
| 988 | 17 | M32 | L5X5X6 | .062 | 6.822 | .003 | 0 | z | 29906.084 | 118260 | 7.418 | 12.233 | 1.136 | H2-1 |
| 989 | 17 | M33 | L5X5X6 | .064 | 6.822 | .003 | 0 | y | 29906.084 | 118260 | 7.418 | 12.233 | 1.136 | H2-1 |
| 990 | 17 | M34 | L5X5X6 | .064 | 6.822 | .003 | 0 | z | 29906.084 | 118260 | 7.418 | 12.233 | 1.136 | H2-1 |
| 991 | 17 | M35 | L5X5X6 | .062 | 6.822 | .003 | 0 | y | 29906.084 | 118260 | 7.418 | 12.233 | 1.136 | H2-1 |
| 992 | 17 | M36 | L5X5X6 | .062 | 6.822 | .003 | 0 | z | 29906.084 | 118260 | 7.418 | 12.233 | 1.136 | H2-1 |
| 993 | 17 | M37 | L5X5X6 | .062 | 6.822 | .003 | 0 | y | 29906.084 | 118260 | 7.418 | 12.233 | 1.136 | H2-1 |
| 994 | 17 | M38 | L5X5X6 | .062 | 6.822 | .003 | 0 | z | 29906.084 | 118260 | 7.418 | 12.233 | 1.136 | H2-1 |
| 995 | 17 | M39 | L5X5X6 | .096 | 7.613 | .003 | 0 | y | 74549.701 | 118260 | 7.418 | 11.768 | 1.136 | H2-1 |
| 996 | 17 | M40 | L5X5X6 | .082 | 7.613 | .003 | 15.226 | y | 74549.701 | 118260 | 7.418 | 11.768 | 1.136 | H2-1 |
| 997 | 17 | M41 | L5X5X6 | .180 | 7.454 | .003 | 0 | y | 24012.917 | 118260 | 7.418 | 11.768 | 1.136 | H2-1 |
| 998 | 17 | M42 | L5X5X6 | .091 | 7.613 | .003 | 15.226 | y | 74549.701 | 118260 | 7.418 | 11.768 | 1.136 | H2-1 |
| 999 | 17 | M43 | L3.5X3.5X5 | .163 | 9.906 | .003 | 0 | y | 15754.264 | 68040 | 2.882 | 3.881 | 1.136 | H2-1 |
| 1000 | 17 | M44 | L3.5X3.5X5 | .298 | 9.699 | .003 | 19.812 | y | 15754.264 | 68040 | 2.882 | 3.881 | 1.136 | H2-1 |
| 1001 | 17 | M45 | L5x5x3/8 wH... | .215 | 16.185 | .005 | 0 | y | 30839.58 | 170301.5... | 10.651 | 7.793 | 1.136 | H2-1 |
| 1002 | 17 | M46 | L5x5x3/8 wH... | .326 | 15.848 | .005 | 32.37 | y | 30839.58 | 170301.5... | 10.651 | 7.793 | 1.136 | H2-1 |
| 1003 | 17 | M47 | WT6X15 | .051 | 6.333 | .004 | 0 | y | 76798.045 | 142560 | 12.906 | 11.902 | 1.136 | H1-1b |
| 1004 | 17 | M48 | WT6X15 | .103 | 0 | .005 | 0 | y | 76798.045 | 142560 | 12.906 | 7.439 | 2.732 | H1-1b |
| 1005 | 17 | M49 | WT6X15 | .095 | 0 | .004 | 12.096 | y | 79928.999 | 142560 | 12.906 | 11.902 | 1.136 | H1-1b* |
| 1006 | 17 | M50 | WT6X15 | .043 | 6.048 | .004 | 0 | y | 79928.999 | 142560 | 12.906 | 11.902 | 1.136 | H1-1b |
| 1007 | 17 | M51 | WT6X15 | .041 | 6.393 | .004 | 0 | y | 76128.484 | 142560 | 12.906 | 11.902 | 1.136 | H1-1b |
| 1008 | 17 | M52 | WT6X15 | .030 | 6.393 | .004 | 12.787 | y | 76128.484 | 142560 | 12.906 | 11.902 | 1.136 | H1-1b |
| 1009 | 17 | M53 | WT6X15 | .042 | 6.005 | .004 | 12.011 | y | 80394.207 | 142560 | 12.906 | 11.902 | 1.136 | H1-1b |
| 1010 | 17 | M54 | WT6X15 | .032 | 6.005 | .004 | 12.011 | y | 80394.207 | 142560 | 12.906 | 11.902 | 1.136 | H1-1b |
| 1011 | 17 | M55 | WT6X15 | .040 | 6.443 | .004 | 12.885 | y | 75583.143 | 142560 | 12.906 | 11.902 | 1.136 | H1-1b |
| 1012 | 17 | M56 | WT6X15 | .032 | 6.443 | .004 | 0 | y | 75583.143 | 142560 | 12.906 | 11.902 | 1.136 | H1-1b |
| 1013 | 17 | M57 | WT6X15 | .042 | 6.07 | .004 | 12.139 | y | 79692.549 | 142560 | 12.906 | 11.902 | 1.136 | H1-1b |
| 1014 | 17 | M58 | WT6X15 | .029 | 6.07 | .004 | 0 | y | 79692.549 | 142560 | 12.906 | 11.902 | 1.136 | H1-1b |
| 1015 | 17 | M59 | WT6X15 | .038 | 6.369 | .004 | 0 | y | 76397.946 | 142560 | 12.906 | 11.902 | 1.136 | H1-1b |
| 1016 | 17 | M60 | WT6X15 | .029 | 6.369 | .004 | 12.738 | y | 76397.946 | 142560 | 12.906 | 11.902 | 1.136 | H1-1b |
| 1017 | 17 | M61 | WT6X15 | .055 | 0 | .004 | 0 | y | 79692.549 | 142560 | 12.906 | 11.902 | 1.136 | H1-1b* |
| 1018 | 17 | M62 | WT6X15 | .036 | 6.07 | .004 | 12.139 | y | 79692.549 | 142560 | 12.906 | 11.902 | 1.136 | H1-1b |
| 1019 | 17 | M63 | WT6X15 | .042 | 6.369 | .004 | 12.738 | y | 76397.946 | 142560 | 12.906 | 11.902 | 1.136 | H1-1b |
| 1020 | 17 | M64 | WT6X15 | .041 | 6.369 | .003 | 0 | y | 76397.946 | 142560 | 12.906 | 11.902 | 1.136 | H1-1b |
| 1021 | 17 | M65 | WT6X15 | .031 | 5.741 | .005 | 0 | y | 83252.56 | 142560 | 12.906 | 11.902 | 1.136 | H1-1b |
| 1022 | 17 | M66 | WT6X15 | .035 | 5.741 | .004 | 11.482 | y | 83252.56 | 142560 | 12.906 | 11.902 | 1.136 | H1-1b |
| 1023 | 17 | M71 | HSS8X4X4 | .010 | 13.5 | .002 | 13.5 | y | 102691.6... | 169776 | 22.14 | 35.91 | 2.381 | H1-1b |
| 1024 | 17 | M72 | HSS8X4X4 | .010 | 0 | .002 | 0 | y | 102691.6... | 169776 | 22.14 | 35.91 | 2.381 | H1-1b |
| 1025 | 17 | M75 | HSS6X4X4 | .024 | 0 | .004 | 0 | y | 52673.992 | 139320 | 17.415 | 23.031 | 2.381 | H1-1b |
| 1026 | 17 | M76 | HSS6X4X4 | .024 | 18.182 | .004 | 18.182 | y | 52673.992 | 139320 | 17.415 | 23.031 | 2.381 | H1-1b |
| 1027 | 17 | M77 | HSS6X4X4 | .022 | 17.321 | .004 | 17.321 | y | 57728.58 | 139320 | 17.415 | 23.031 | 2.381 | H1-1b |
| 1028 | 17 | M76A | L4x4x5/16 w... | .013 | 7.571 | .001 | 7.571 | y | 59982.319 | 122790.8... | 5.57 | 9.968 | 1.375 | H2-1 |
| 1029 | 17 | M77A | L4x4x5/16 w... | .015 | 7.571 | .001 | 7.571 | y | 59982.319 | 122790.8... | 5.57 | 9.968 | 1.603 | H2-1 |
| 1030 | 17 | M78 | L4x4x5/16 w... | .104 | 14.72 | .002 | 14.72 | y | 16644.398 | 122790.8... | 5.57 | 9.968 | 2.46 | H2-1 |
| 1031 | 17 | M79 | L4x4x5/16 w... | .104 | 14.72 | .002 | 14.72 | y | 16644.398 | 122790.8... | 5.57 | 9.968 | 2.607 | H2-1 |
| 1032 | 17 | M84 | PIPE_3.0 | .224 | 0 | .022 | 0 | | 28250.611 | 65205 | 5.749 | 5.749 | 1.185 | H1-1b |
| 1033 | 17 | M85 | PIPE_3.0 | .221 | 12.5 | .023 | 12.5 | | 28250.611 | 65205 | 5.749 | 5.749 | 1.185 | H1-1b |
| 1034 | 17 | M86 | PIPE_3.0 | .244 | 0 | .003 | 0 | | 28250.554 | 65205 | 5.749 | 5.749 | 1.101 | H1-1b |
| 1035 | 17 | M87 | HSS4x0.250 | .796 | 0 | .069 | 0 | | 71625.082 | 89424 | 8.937 | 8.937 | 2.16 | H1-1b |
| 1036 | 17 | M88 | HSS4x0.250 | .488 | 0 | .034 | 0 | | 71625.341 | 89424 | 8.937 | 8.937 | 2.186 | H1-1b |
| 1037 | 17 | M89 | HSS4x0.250 | .791 | 0 | .069 | 0 | | 71625.082 | 89424 | 8.937 | 8.937 | 2.16 | H1-1b |
| 1038 | 18 | M1 | W24x68 w1... | .053 | 0 | .011 | 0 | y | 1.73781e... | 2.33302e... | 564.878 | 2134.343 | 2.754 | H1-1b |
| 1039 | 18 | M2 | W24x68 w1... | .047 | 0 | .008 | 10.292 | y | 1.73781e... | 2.33302e... | 564.878 | 2134.343 | 1.517 | H1-1b |

## Member AISC 14th(360-10): LRFD Steel Code Checks (Continued)

| | LC | Member | Shape | UC Max | Loc[ft] | Shear UC | Loc[ft] | Dir | phi*Pnc[lb] | phi*Pnt[lb] | phi*Mnyy... | phi*Mnzz... | Cb | Eqn |
|---|---|---|---|---|---|---|---|---|---|---|---|---|---|---|
| 1040 | 18 | M3 | W24X68 | .035 | 0 | .005 | 59.08 | y | 492994.2... | 904500 | 91.875 | 507.447 | 1 | H1-1b |
| 1041 | 18 | M4 | W24X68 | .049 | 0 | .008 | 0 | y | 492994.2... | 904500 | 91.875 | 507.447 | 1 | H1-1b |
| 1042 | 18 | M5 | HSS18x0.500 | .076 | 0 | .004 | 0 | | 687685.7... | 806400 | 375.375 | 375.375 | 2.358 | H1-1b* |
| 1043 | 18 | M6 | HSS18x0.500 | .060 | 0 | .002 | 3.175 | | 696116.0... | 806400 | 375.375 | 375.375 | 2.223 | H1-1b* |
| 1044 | 18 | M7 | HSS18x0.500 | .052 | 16.91 | .006 | 16.91 | | 690364.7... | 806400 | 375.375 | 375.375 | 1.472 | H1-1b |
| 1045 | 18 | M8 | HSS18x0.500 | .030 | 0 | .002 | 0 | | 711671.5... | 806400 | 375.375 | 375.375 | 1.818 | H1-1b |
| 1046 | 18 | M29 | L5X5X6 | .072 | 6.822 | .003 | 0 | y | 29906.084 | 118260 | 7.418 | 12.233 | 1.136 | H2-1 |
| 1047 | 18 | M30 | L5X5X6 | .073 | 6.822 | .003 | 0 | z | 29906.084 | 118260 | 7.418 | 12.233 | 1.136 | H2-1 |
| 1048 | 18 | M31 | L5X5X6 | .062 | 6.822 | .003 | 0 | y | 29906.084 | 118260 | 7.418 | 12.233 | 1.136 | H2-1 |
| 1049 | 18 | M32 | L5X5X6 | .062 | 6.822 | .003 | 0 | z | 29906.084 | 118260 | 7.418 | 12.233 | 1.136 | H2-1 |
| 1050 | 18 | M33 | L5X5X6 | .063 | 6.822 | .003 | 0 | y | 29906.084 | 118260 | 7.418 | 12.233 | 1.136 | H2-1 |
| 1051 | 18 | M34 | L5X5X6 | .063 | 6.822 | .003 | 0 | z | 29906.084 | 118260 | 7.418 | 12.233 | 1.136 | H2-1 |
| 1052 | 18 | M35 | L5X5X6 | .061 | 6.822 | .003 | 0 | y | 29906.084 | 118260 | 7.418 | 12.233 | 1.136 | H2-1 |
| 1053 | 18 | M36 | L5X5X6 | .062 | 6.822 | .003 | 0 | z | 29906.084 | 118260 | 7.418 | 12.233 | 1.136 | H2-1 |
| 1054 | 18 | M37 | L5X5X6 | .062 | 6.822 | .003 | 0 | y | 29906.084 | 118260 | 7.418 | 12.233 | 1.136 | H2-1 |
| 1055 | 18 | M38 | L5X5X6 | .062 | 6.822 | .003 | 0 | z | 29906.084 | 118260 | 7.418 | 12.233 | 1.136 | H2-1 |
| 1056 | 18 | M39 | L5X5X6 | .084 | 7.613 | .003 | 15.226 | y | 74549.701 | 118260 | 7.418 | 11.768 | 1.136 | H2-1 |
| 1057 | 18 | M40 | L5X5X6 | .075 | 7.613 | .003 | 15.226 | y | 74549.701 | 118260 | 7.418 | 11.768 | 1.136 | H2-1 |
| 1058 | 18 | M41 | L5X5X6 | .129 | 7.454 | .003 | 15.226 | y | 24012.917 | 118260 | 7.418 | 11.768 | 1.136 | H2-1 |
| 1059 | 18 | M42 | L5X5X6 | .081 | 7.613 | .003 | 15.226 | y | 74549.701 | 118260 | 7.418 | 11.768 | 1.136 | H2-1 |
| 1060 | 18 | M43 | L3.5X3.5X5 | .152 | 9.906 | .003 | 0 | y | 15754.264 | 68040 | 2.882 | 3.881 | 1.136 | H2-1 |
| 1061 | 18 | M44 | L3.5X3.5X5 | .229 | 9.699 | .003 | 0 | y | 15754.264 | 68040 | 2.882 | 3.881 | 1.136 | H2-1 |
| 1062 | 18 | M45 | L5x5x3/8 wH... | .210 | 16.185 | .005 | 0 | y | 30839.58 | 170301.5... | 10.651 | 7.793 | 1.136 | H2-1 |
| 1063 | 18 | M46 | L5x5x3/8 wH... | .285 | 15.848 | .005 | 32.37 | y | 30839.58 | 170301.5... | 10.651 | 7.793 | 1.136 | H2-1 |
| 1064 | 18 | M47 | WT6X15 | .048 | 6.333 | .004 | 0 | y | 76798.045 | 142560 | 12.906 | 11.902 | 1.136 | H1-1b |
| 1065 | 18 | M48 | WT6X15 | .052 | 0 | .004 | 0 | y | 76798.045 | 142560 | 12.906 | 7.439 | 2.874 | H1-1b |
| 1066 | 18 | M49 | WT6X15 | .079 | 0 | .004 | 0 | y | 79928.999 | 142560 | 12.906 | 11.902 | 1.136 | H1-1b* |
| 1067 | 18 | M50 | WT6X15 | .030 | 6.048 | .004 | 0 | y | 79928.999 | 142560 | 12.906 | 11.902 | 1.136 | H1-1b |
| 1068 | 18 | M51 | WT6X15 | .045 | 6.393 | .004 | 0 | y | 76128.484 | 142560 | 12.906 | 11.902 | 1.136 | H1-1b |
| 1069 | 18 | M52 | WT6X15 | .038 | 6.393 | .004 | 0 | y | 76128.484 | 142560 | 12.906 | 11.902 | 1.136 | H1-1b |
| 1070 | 18 | M53 | WT6X15 | .050 | 6.005 | .004 | 0 | y | 80394.207 | 142560 | 12.906 | 11.902 | 1.136 | H1-1b |
| 1071 | 18 | M54 | WT6X15 | .043 | 6.005 | .003 | 12.011 | y | 80394.207 | 142560 | 12.906 | 11.902 | 1.136 | H1-1b |
| 1072 | 18 | M55 | WT6X15 | .043 | 6.443 | .004 | 0 | y | 75583.143 | 142560 | 12.906 | 11.902 | 1.136 | H1-1b |
| 1073 | 18 | M56 | WT6X15 | .035 | 6.443 | .004 | 0 | y | 75583.143 | 142560 | 12.906 | 11.902 | 1.136 | H1-1b |
| 1074 | 18 | M57 | WT6X15 | .047 | 6.07 | .004 | 0 | y | 79692.549 | 142560 | 12.906 | 11.902 | 1.136 | H1-1b |
| 1075 | 18 | M58 | WT6X15 | .039 | 6.07 | .004 | 0 | y | 79692.549 | 142560 | 12.906 | 11.902 | 1.136 | H1-1b |
| 1076 | 18 | M59 | WT6X15 | .040 | 6.369 | .004 | 0 | y | 76397.946 | 142560 | 12.906 | 11.902 | 1.136 | H1-1b |
| 1077 | 18 | M60 | WT6X15 | .034 | 6.369 | .004 | 0 | y | 76397.946 | 142560 | 12.906 | 11.902 | 1.136 | H1-1b |
| 1078 | 18 | M61 | WT6X15 | .057 | 0 | .004 | 0 | y | 79692.549 | 142560 | 12.906 | 11.902 | 1.136 | H1-1b* |
| 1079 | 18 | M62 | WT6X15 | .030 | 6.07 | .004 | 0 | y | 79692.549 | 142560 | 12.906 | 11.902 | 1.136 | H1-1b |
| 1080 | 18 | M63 | WT6X15 | .044 | 6.369 | .003 | 12.738 | y | 76397.946 | 142560 | 12.906 | 11.902 | 1.136 | H1-1b |
| 1081 | 18 | M64 | WT6X15 | .031 | 6.369 | .003 | 12.738 | y | 76397.946 | 142560 | 12.906 | 11.902 | 1.136 | H1-1b |
| 1082 | 18 | M65 | WT6X15 | .036 | 5.741 | .004 | 0 | y | 83252.56 | 142560 | 12.906 | 11.902 | 1.136 | H1-1b |
| 1083 | 18 | M66 | WT6X15 | .037 | 5.741 | .004 | 11.482 | y | 83252.56 | 142560 | 12.906 | 11.902 | 1.136 | H1-1b |
| 1084 | 18 | M71 | HSS8X4X4 | .010 | 13.5 | .002 | 13.5 | y | 102691.6... | 169776 | 22.14 | 35.91 | 2.381 | H1-1b |
| 1085 | 18 | M72 | HSS8X4X4 | .010 | 0 | .002 | 0 | y | 102691.6... | 169776 | 22.14 | 35.91 | 2.381 | H1-1b |
| 1086 | 18 | M75 | HSS6X4X4 | .024 | 0 | .004 | 0 | y | 52673.992 | 139320 | 17.415 | 23.031 | 2.381 | H1-1b |
| 1087 | 18 | M76 | HSS6X4X4 | .024 | 18.182 | .004 | 18.182 | y | 52673.992 | 139320 | 17.415 | 23.031 | 2.381 | H1-1b |
| 1088 | 18 | M77 | HSS6X4X4 | .022 | 17.321 | .004 | 17.321 | y | 57728.58 | 139320 | 17.415 | 23.031 | 2.381 | H1-1b |
| 1089 | 18 | M76A | L4x4x5/16 w... | .014 | 7.571 | .001 | 7.571 | y | 59982.319 | 122790.8... | 5.57 | 9.968 | 1.34 | H2-1 |
| 1090 | 18 | M77A | L4x4x5/16 w... | .016 | 7.571 | .001 | 7.571 | y | 59982.319 | 122790.8... | 5.57 | 9.968 | 1.818 | H2-1 |
| 1091 | 18 | M78 | L4x4x5/16 w... | .105 | 14.72 | .002 | 14.72 | y | 16644.398 | 122790.8... | 5.57 | 9.968 | 2.472 | H2-1 |

## Member AISC 14th(360-10): LRFD Steel Code Checks (Continued)

| | LC | Member | Shape | UC Max | Loc[ft] | Shear UC | Loc[ft] | Dir | phi*Pnc[lb] | phi*Pnt[lb] | phi*Mnyy... | phi*Mnzz... | Cb | Eqn |
|---|---|---|---|---|---|---|---|---|---|---|---|---|---|---|
| 1092 | 18 | M79 | L4x4x5/16 w... | .107 | 14.72 | .002 | 14.72 | y | 16644.398 | 122790.8... | 5.57 | 9.968 | 2.639 | H2-1 |
| 1093 | 18 | M84 | PIPE 3.0 | .224 | 0 | .023 | 0 | | 28250.611 | 65205 | 5.749 | 5.749 | 1.185 | H1-1b |
| 1094 | 18 | M85 | PIPE 3.0 | .222 | 12.5 | .023 | 12.5 | | 28250.611 | 65205 | 5.749 | 5.749 | 1.185 | H1-1b |
| 1095 | 18 | M86 | PIPE 3.0 | .244 | 0 | .003 | 0 | | 28250.554 | 65205 | 5.749 | 5.749 | 1.1 | H1-1b |
| 1096 | 18 | M87 | HSS4x0.250 | .795 | 0 | .069 | 0 | | 71625.082 | 89424 | 8.937 | 8.937 | 2.16 | H1-1b |
| 1097 | 18 | M88 | HSS4x0.250 | .486 | 0 | .034 | 0 | | 71625.341 | 89424 | 8.937 | 8.937 | 2.187 | H1-1b |
| 1098 | 18 | M89 | HSS4x0.250 | .792 | 0 | .069 | 0 | | 71625.082 | 89424 | 8.937 | 8.937 | 2.16 | H1-1b |
| 1099 | 19 | M1 | W24x68 w1... | .034 | 0 | .011 | 0 | y | 1.73781e... | 2.33302e... | 564.878 | 2134.343 | 1.864 | H1-1b |
| 1100 | 19 | M2 | W24x68 w1... | .036 | 0 | .011 | 1.385 | y | 1.73781e... | 2.33302e... | 564.878 | 2134.343 | 1.869 | H1-1b |
| 1101 | 19 | M3 | W24X68 | .024 | 60.337 | .005 | 59.08 | y | 492994.2... | 904500 | 91.875 | 507.447 | 1 | H1-1b |
| 1102 | 19 | M4 | W24X68 | .024 | 60.337 | .005 | 59.08 | y | 492994.2... | 904500 | 91.875 | 507.447 | 1 | H1-1b |
| 1103 | 19 | M5 | HSS18x0.500 | .083 | 0 | .003 | 0 | | 687685.7... | 806400 | 375.375 | 375.375 | 1.673 | H1-1b* |
| 1104 | 19 | M6 | HSS18x0.500 | .065 | 0 | .001 | 3.175 | | 696116.0... | 806400 | 375.375 | 375.375 | 1.433 | H1-1b* |
| 1105 | 19 | M7 | HSS18x0.500 | .035 | 0 | .003 | 16.91 | | 690364.7... | 806400 | 375.375 | 375.375 | 2.076 | H1-1b* |
| 1106 | 19 | M8 | HSS18x0.500 | .011 | 0 | .001 | 0 | | 711671.5... | 806400 | 375.375 | 375.375 | 1.667 | H1-1b |
| 1107 | 19 | M29 | L5X5X6 | .074 | 6.822 | .003 | 0 | y | 29906.084 | 118260 | 7.418 | 12.233 | 1.136 | H2-1 |
| 1108 | 19 | M30 | L5X5X6 | .074 | 6.822 | .003 | 0 | z | 29906.084 | 118260 | 7.418 | 12.233 | 1.136 | H2-1 |
| 1109 | 19 | M31 | L5X5X6 | .062 | 6.822 | .003 | 0 | y | 29906.084 | 118260 | 7.418 | 12.233 | 1.136 | H2-1 |
| 1110 | 19 | M32 | L5X5X6 | .062 | 6.822 | .003 | 0 | z | 29906.084 | 118260 | 7.418 | 12.233 | 1.136 | H2-1 |
| 1111 | 19 | M33 | L5X5X6 | .063 | 6.822 | .003 | 0 | y | 29906.084 | 118260 | 7.418 | 12.233 | 1.136 | H2-1 |
| 1112 | 19 | M34 | L5X5X6 | .063 | 6.822 | .003 | 0 | z | 29906.084 | 118260 | 7.418 | 12.233 | 1.136 | H2-1 |
| 1113 | 19 | M35 | L5X5X6 | .061 | 6.822 | .003 | 0 | y | 29906.084 | 118260 | 7.418 | 12.233 | 1.136 | H2-1 |
| 1114 | 19 | M36 | L5X5X6 | .061 | 6.822 | .003 | 0 | z | 29906.084 | 118260 | 7.418 | 12.233 | 1.136 | H2-1 |
| 1115 | 19 | M37 | L5X5X6 | .062 | 6.822 | .003 | 0 | y | 29906.084 | 118260 | 7.418 | 12.233 | 1.136 | H2-1 |
| 1116 | 19 | M38 | L5X5X6 | .062 | 6.822 | .003 | 0 | z | 29906.084 | 118260 | 7.418 | 12.233 | 1.136 | H2-1 |
| 1117 | 19 | M39 | L5X5X6 | .069 | 7.613 | .003 | 0 | y | 74549.701 | 118260 | 7.418 | 11.768 | 1.136 | H2-1 |
| 1118 | 19 | M40 | L5X5X6 | .071 | 7.613 | .003 | 0 | y | 74549.701 | 118260 | 7.418 | 11.768 | 1.136 | H2-1 |
| 1119 | 19 | M41 | L5X5X6 | .069 | 7.613 | .003 | 0 | y | 24012.917 | 118260 | 7.418 | 11.768 | 1.136 | H2-1 |
| 1120 | 19 | M42 | L5X5X6 | .068 | 7.613 | .003 | 0 | y | 74549.701 | 118260 | 7.418 | 11.768 | 1.136 | H2-1 |
| 1121 | 19 | M43 | L3.5X3.5X5 | .157 | 9.699 | .003 | 0 | y | 15754.264 | 68040 | 2.882 | 3.881 | 1.136 | H2-1 |
| 1122 | 19 | M44 | L3.5X3.5X5 | .147 | 9.699 | .003 | 0 | y | 15754.264 | 68040 | 2.882 | 3.881 | 1.136 | H2-1 |
| 1123 | 19 | M45 | L5x5x3/8 wH... | .246 | 15.848 | .005 | 32.37 | y | 30839.58 | 170301.5... | 10.651 | 7.793 | 1.136 | H2-1 |
| 1124 | 19 | M46 | L5x5x3/8 wH... | .239 | 15.848 | .005 | 0 | y | 30839.58 | 170301.5... | 10.651 | 7.793 | 1.136 | H2-1 |
| 1125 | 19 | M47 | WT6X15 | .039 | 6.333 | .003 | 0 | y | 76798.045 | 142560 | 12.906 | 11.902 | 1.136 | H1-1b |
| 1126 | 19 | M48 | WT6X15 | .057 | 12.666 | .004 | 12.666 | y | 76798.045 | 142560 | 12.906 | 7.439 | 2.691 | H1-1b |
| 1127 | 19 | M49 | WT6X15 | .047 | 6.048 | .003 | 0 | y | 79928.999 | 142560 | 12.906 | 11.902 | 1.136 | H1-1b |
| 1128 | 19 | M50 | WT6X15 | .047 | 6.048 | .003 | 0 | y | 79928.999 | 142560 | 12.906 | 11.902 | 1.136 | H1-1b |
| 1129 | 19 | M51 | WT6X15 | .044 | 6.393 | .003 | 12.787 | y | 76128.484 | 142560 | 12.906 | 11.902 | 1.136 | H1-1b |
| 1130 | 19 | M52 | WT6X15 | .043 | 6.393 | .003 | 0 | y | 76128.484 | 142560 | 12.906 | 11.902 | 1.136 | H1-1b |
| 1131 | 19 | M53 | WT6X15 | .050 | 6.005 | .003 | 12.011 | y | 80394.207 | 142560 | 12.906 | 11.902 | 1.136 | H1-1b |
| 1132 | 19 | M54 | WT6X15 | .049 | 6.005 | .003 | 12.011 | y | 80394.207 | 142560 | 12.906 | 11.902 | 1.136 | H1-1b |
| 1133 | 19 | M55 | WT6X15 | .041 | 6.443 | .003 | 0 | y | 75583.143 | 142560 | 12.906 | 11.902 | 1.136 | H1-1b |
| 1134 | 19 | M56 | WT6X15 | .040 | 6.443 | .003 | 0 | y | 75583.143 | 142560 | 12.906 | 11.902 | 1.136 | H1-1b |
| 1135 | 19 | M57 | WT6X15 | .046 | 6.07 | .003 | 12.139 | y | 79692.549 | 142560 | 12.906 | 11.902 | 1.136 | H1-1b |
| 1136 | 19 | M58 | WT6X15 | .045 | 6.07 | .003 | 0 | y | 79692.549 | 142560 | 12.906 | 11.902 | 1.136 | H1-1b |
| 1137 | 19 | M59 | WT6X15 | .038 | 6.369 | .003 | 0 | y | 76397.946 | 142560 | 12.906 | 11.902 | 1.136 | H1-1b |
| 1138 | 19 | M60 | WT6X15 | .038 | 6.369 | .003 | 12.738 | y | 76397.946 | 142560 | 12.906 | 11.902 | 1.136 | H1-1b |
| 1139 | 19 | M61 | WT6X15 | .046 | 6.07 | .003 | 0 | y | 79692.549 | 142560 | 12.906 | 11.902 | 1.136 | H1-1b |
| 1140 | 19 | M62 | WT6X15 | .045 | 6.07 | .003 | 12.139 | y | 79692.549 | 142560 | 12.906 | 11.902 | 1.136 | H1-1b |
| 1141 | 19 | M63 | WT6X15 | .040 | 6.369 | .003 | 0 | y | 76397.946 | 142560 | 12.906 | 11.902 | 1.136 | H1-1b |
| 1142 | 19 | M64 | WT6X15 | .039 | 6.369 | .004 | 12.738 | y | 76397.946 | 142560 | 12.906 | 11.902 | 1.136 | H1-1b |
| 1143 | 19 | M65 | WT6X15 | .038 | 5.741 | .003 | 0 | y | 83252.56 | 142560 | 12.906 | 11.902 | 1.136 | H1-1b |

## Member AISC 14th(360-10): LRFD Steel Code Checks (Continued)

| | LC | Member | Shape | UC Max | Loc[ft] | Shear UC | Loc[ft] | Dir | phi*Pnc[lb] | phi*Pnt[lb] | phi*Mnyy... | phi*Mnzz... | Cb | Eqn |
|---|---|---|---|---|---|---|---|---|---|---|---|---|---|---|
| 1144 | 19 | M66 | WT6X15 | .037 | 5.741 | .003 | 11.482 | y | 83252.56 | 142560 | 12.906 | 11.902 | 1.136 | H1-1b |
| 1145 | 19 | M71 | HSS8X4X4 | .010 | 13.5 | .002 | 13.5 | y | 102691.6... | 169776 | 22.14 | 35.91 | 2.381 | H1-1b |
| 1146 | 19 | M72 | HSS8X4X4 | .010 | 0 | .002 | 0 | y | 102691.6... | 169776 | 22.14 | 35.91 | 2.381 | H1-1b |
| 1147 | 19 | M75 | HSS6X4X4 | .024 | 0 | .004 | 0 | y | 52673.992 | 139320 | 17.415 | 23.031 | 2.381 | H1-1b |
| 1148 | 19 | M76 | HSS6X4X4 | .024 | 18.182 | .004 | 18.182 | y | 52673.992 | 139320 | 17.415 | 23.031 | 2.381 | H1-1b |
| 1149 | 19 | M77 | HSS6X4X4 | .022 | 17.321 | .004 | 17.321 | y | 57728.58 | 139320 | 17.415 | 23.031 | 2.381 | H1-1b |
| 1150 | 19 | M76A | L4x4x5/16 w... | .015 | 7.571 | .001 | 7.571 | y | 59982.319 | 122790.8... | 5.57 | 9.968 | 1.468 | H2-1 |
| 1151 | 19 | M77A | L4x4x5/16 w... | .016 | 7.571 | .001 | 7.571 | y | 59982.319 | 122790.8... | 5.57 | 9.968 | 2.058 | H2-1 |
| 1152 | 19 | M78 | L4x4x5/16 w... | .105 | 14.72 | .002 | 14.72 | y | 16644.398 | 122790.8... | 5.57 | 9.968 | 2.488 | H2-1 |
| 1153 | 19 | M79 | L4x4x5/16 w... | .108 | 14.72 | .002 | 14.72 | y | 16644.398 | 122790.8... | 5.57 | 9.968 | 2.65 | H2-1 |
| 1154 | 19 | M84 | PIPE_3.0 | .223 | 0 | .023 | 0 | | 28250.611 | 65205 | 5.749 | 5.749 | 1.185 | H1-1b |
| 1155 | 19 | M85 | PIPE_3.0 | .223 | 12.5 | .023 | 12.5 | | 28250.611 | 65205 | 5.749 | 5.749 | 1.185 | H1-1b |
| 1156 | 19 | M86 | PIPE_3.0 | .245 | 12.5 | .003 | 12.5 | | 28250.554 | 65205 | 5.749 | 5.749 | 1.1 | H1-1b |
| 1157 | 19 | M87 | HSS4x0.250 | .794 | 0 | .069 | 0 | | 71625.082 | 89424 | 8.937 | 8.937 | 2.16 | H1-1b |
| 1158 | 19 | M88 | HSS4x0.250 | .486 | 0 | .033 | 0 | | 71625.341 | 89424 | 8.937 | 8.937 | 2.187 | H1-1b |
| 1159 | 19 | M89 | HSS4x0.250 | .794 | 0 | .069 | 0 | | 71625.082 | 89424 | 8.937 | 8.937 | 2.16 | H1-1b |
| 1160 | 20 | M1 | W24x68 w1... | .045 | 0 | .008 | 10.292 | y | 1.73781e... | 2.33302e... | 564.878 | 2134.343 | 1.525 | H1-1b |
| 1161 | 20 | M2 | W24x68 w1... | .051 | 0 | .011 | 10.094 | y | 1.73781e... | 2.33302e... | 564.878 | 2134.343 | 2.859 | H1-1b |
| 1162 | 20 | M3 | W24X68 | .044 | 0 | .008 | 0 | y | 492994.2... | 904500 | 91.875 | 507.447 | 1 | H1-1b |
| 1163 | 20 | M4 | W24X68 | .032 | 0 | .005 | 59.08 | y | 492994.2... | 904500 | 91.875 | 507.447 | 1 | H1-1b |
| 1164 | 20 | M5 | HSS18x0.500 | .076 | 0 | .004 | 0 | | 687685.7... | 806400 | 375.375 | 375.375 | 2.29 | H1-1b* |
| 1165 | 20 | M6 | HSS18x0.500 | .060 | 0 | .002 | 3.175 | | 696116.0... | 806400 | 375.375 | 375.375 | 2.619 | H1-1b* |
| 1166 | 20 | M7 | HSS18x0.500 | .052 | 16.91 | .006 | 16.91 | | 690364.7... | 806400 | 375.375 | 375.375 | 1.476 | H1-1b |
| 1167 | 20 | M8 | HSS18x0.500 | .030 | 0 | .002 | 0 | | 711671.5... | 806400 | 375.375 | 375.375 | 1.818 | H1-1b |
| 1168 | 20 | M29 | L5X5X6 | .072 | 6.822 | .003 | 0 | y | 29906.084 | 118260 | 7.418 | 12.233 | 1.136 | H2-1 |
| 1169 | 20 | M30 | L5X5X6 | .072 | 6.822 | .003 | 0 | z | 29906.084 | 118260 | 7.418 | 12.233 | 1.136 | H2-1 |
| 1170 | 20 | M31 | L5X5X6 | .062 | 6.822 | .003 | 0 | y | 29906.084 | 118260 | 7.418 | 12.233 | 1.136 | H2-1 |
| 1171 | 20 | M32 | L5X5X6 | .062 | 6.822 | .003 | 0 | z | 29906.084 | 118260 | 7.418 | 12.233 | 1.136 | H2-1 |
| 1172 | 20 | M33 | L5X5X6 | .064 | 6.822 | .003 | 0 | y | 29906.084 | 118260 | 7.418 | 12.233 | 1.136 | H2-1 |
| 1173 | 20 | M34 | L5X5X6 | .064 | 6.822 | .003 | 0 | z | 29906.084 | 118260 | 7.418 | 12.233 | 1.136 | H2-1 |
| 1174 | 20 | M35 | L5X5X6 | .061 | 6.822 | .003 | 0 | y | 29906.084 | 118260 | 7.418 | 12.233 | 1.136 | H2-1 |
| 1175 | 20 | M36 | L5X5X6 | .061 | 6.822 | .003 | 0 | z | 29906.084 | 118260 | 7.418 | 12.233 | 1.136 | H2-1 |
| 1176 | 20 | M37 | L5X5X6 | .062 | 6.822 | .003 | 0 | y | 29906.084 | 118260 | 7.418 | 12.233 | 1.136 | H2-1 |
| 1177 | 20 | M38 | L5X5X6 | .062 | 6.822 | .003 | 0 | z | 29906.084 | 118260 | 7.418 | 12.233 | 1.136 | H2-1 |
| 1178 | 20 | M39 | L5X5X6 | .076 | 7.613 | .003 | 15.226 | y | 74549.701 | 118260 | 7.418 | 11.768 | 1.136 | H2-1 |
| 1179 | 20 | M40 | L5X5X6 | .086 | 7.613 | .003 | 15.226 | y | 74549.701 | 118260 | 7.418 | 11.768 | 1.136 | H2-1 |
| 1180 | 20 | M41 | L5X5X6 | .082 | 7.613 | .003 | 0 | y | 24012.917 | 118260 | 7.418 | 11.768 | 1.136 | H2-1 |
| 1181 | 20 | M42 | L5X5X6 | .089 | 7.613 | .003 | 15.226 | y | 74549.701 | 118260 | 7.418 | 11.768 | 1.136 | H2-1 |
| 1182 | 20 | M43 | L3.5X3.5X5 | .237 | 9.699 | .003 | 0 | y | 15754.264 | 68040 | 2.882 | 3.881 | 1.136 | H2-1 |
| 1183 | 20 | M44 | L3.5X3.5X5 | .154 | 9.906 | .003 | 0 | y | 15754.264 | 68040 | 2.882 | 3.881 | 1.136 | H2-1 |
| 1184 | 20 | M45 | L5x5x3/8 wH... | .291 | 15.848 | .005 | 32.37 | y | 30839.58 | 170301.5... | 10.651 | 7.793 | 1.136 | H2-1 |
| 1185 | 20 | M46 | L5x5x3/8 wH... | .211 | 16.185 | .005 | 0 | y | 30839.58 | 170301.5... | 10.651 | 7.793 | 1.136 | H2-1 |
| 1186 | 20 | M47 | WT6X15 | .030 | 6.333 | .004 | 12.666 | y | 76798.045 | 142560 | 12.906 | 11.902 | 1.136 | H1-1b |
| 1187 | 20 | M48 | WT6X15 | .088 | 12.666 | .005 | 12.666 | y | 76798.045 | 142560 | 12.906 | 7.439 | 2.39 | H1-1b |
| 1188 | 20 | M49 | WT6X15 | .029 | 6.048 | .004 | 0 | y | 79928.999 | 142560 | 12.906 | 11.902 | 1.136 | H1-1b |
| 1189 | 20 | M50 | WT6X15 | .079 | 0 | .004 | 12.096 | y | 79928.999 | 142560 | 12.906 | 11.902 | 1.136 | H1-1b* |
| 1190 | 20 | M51 | WT6X15 | .039 | 6.393 | .004 | 0 | y | 76128.484 | 142560 | 12.906 | 11.902 | 1.136 | H1-1b |
| 1191 | 20 | M52 | WT6X15 | .044 | 6.393 | .004 | 0 | y | 76128.484 | 142560 | 12.906 | 11.902 | 1.136 | H1-1b |
| 1192 | 20 | M53 | WT6X15 | .044 | 6.005 | .003 | 12.011 | y | 80394.207 | 142560 | 12.906 | 11.902 | 1.136 | H1-1b |
| 1193 | 20 | M54 | WT6X15 | .049 | 6.005 | .004 | 0 | y | 80394.207 | 142560 | 12.906 | 11.902 | 1.136 | H1-1b |
| 1194 | 20 | M55 | WT6X15 | .035 | 6.443 | .004 | 12.885 | y | 75583.143 | 142560 | 12.906 | 11.902 | 1.136 | H1-1b |
| 1195 | 20 | M56 | WT6X15 | .042 | 6.443 | .004 | 12.885 | y | 75583.143 | 142560 | 12.906 | 11.902 | 1.136 | H1-1b |

## Member AISC 14th(360-10): LRFD Steel Code Checks (Continued)

| | LC | Member | Shape | UC Max | Loc[ft] | Shear UC | Loc[ft] | Dir | phi*Pnc[lb] | phi*Pnt[lb] | phi*Mnyy... | phi*Mnzz... | Cb | Eqn |
|---|---|---|---|---|---|---|---|---|---|---|---|---|---|---|
| 1196 | 20 | M57 | WT6X15 | .040 | 6.07 | .004 | 12.139 | y | 79692.549 | 142560 | 12.906 | 11.902 | 1.136 | H1-1b |
| 1197 | 20 | M58 | WT6X15 | .046 | 6.07 | .004 | 0 | y | 79692.549 | 142560 | 12.906 | 11.902 | 1.136 | H1-1b |
| 1198 | 20 | M59 | WT6X15 | .035 | 6.369 | .004 | 0 | y | 76397.946 | 142560 | 12.906 | 11.902 | 1.136 | H1-1b |
| 1199 | 20 | M60 | WT6X15 | .039 | 6.369 | .004 | 0 | y | 76397.946 | 142560 | 12.906 | 11.902 | 1.136 | H1-1b |
| 1200 | 20 | M61 | WT6X15 | .030 | 6.07 | .004 | 0 | y | 79692.549 | 142560 | 12.906 | 11.902 | 1.136 | H1-1b |
| 1201 | 20 | M62 | WT6X15 | .055 | 0 | .004 | 0 | y | 79692.549 | 142560 | 12.906 | 11.902 | 1.136 | H1-1b* |
| 1202 | 20 | M63 | WT6X15 | .032 | 6.369 | .003 | 0 | y | 76397.946 | 142560 | 12.906 | 11.902 | 1.136 | H1-1b |
| 1203 | 20 | M64 | WT6X15 | .043 | 6.369 | .003 | 12.738 | y | 76397.946 | 142560 | 12.906 | 11.902 | 1.136 | H1-1b |
| 1204 | 20 | M65 | WT6X15 | .038 | 5.741 | .004 | 0 | y | 83252.56 | 142560 | 12.906 | 11.902 | 1.136 | H1-1b |
| 1205 | 20 | M66 | WT6X15 | .035 | 5.741 | .004 | 11.482 | y | 83252.56 | 142560 | 12.906 | 11.902 | 1.136 | H1-1b |
| 1206 | 20 | M71 | HSS8X4X4 | .010 | 0 | .002 | 0 | y | 102691.6... | 169776 | 22.14 | 35.91 | 2.381 | H1-1b |
| 1207 | 20 | M72 | HSS8X4X4 | .010 | 13.5 | .002 | 13.5 | y | 102691.6... | 169776 | 22.14 | 35.91 | 2.381 | H1-1b |
| 1208 | 20 | M75 | HSS6X4X4 | .024 | 0 | .004 | 0 | y | 52673.992 | 139320 | 17.415 | 23.031 | 2.381 | H1-1b |
| 1209 | 20 | M76 | HSS6X4X4 | .024 | 18.182 | .004 | 18.182 | y | 52673.992 | 139320 | 17.415 | 23.031 | 2.381 | H1-1b |
| 1210 | 20 | M77 | HSS6X4X4 | .022 | 0 | .004 | 0 | y | 57728.58 | 139320 | 17.415 | 23.031 | 2.381 | H1-1b |
| 1211 | 20 | M76A | L4x4x5/16 w... | .016 | 7.571 | .001 | 7.571 | y | 59982.319 | 122790.8... | 5.57 | 9.968 | 1.888 | H2-1 |
| 1212 | 20 | M77A | L4x4x5/16 w... | .016 | 7.571 | .001 | 7.571 | y | 59982.319 | 122790.8... | 5.57 | 9.968 | 2.138 | H2-1 |
| 1213 | 20 | M78 | L4x4x5/16 w... | .104 | 14.72 | .002 | 14.72 | y | 16644.398 | 122790.8... | 5.57 | 9.968 | 2.503 | H2-1 |
| 1214 | 20 | M79 | L4x4x5/16 w... | .108 | 14.72 | .002 | 14.72 | y | 16644.398 | 122790.8... | 5.57 | 9.968 | 2.637 | H2-1 |
| 1215 | 20 | M84 | PIPE_3.0 | .222 | 0 | .023 | 0 | | 28250.611 | 65205 | 5.749 | 5.749 | 1.185 | H1-1b |
| 1216 | 20 | M85 | PIPE_3.0 | .224 | 12.5 | .023 | 12.5 | | 28250.611 | 65205 | 5.749 | 5.749 | 1.185 | H1-1b |
| 1217 | 20 | M86 | PIPE_3.0 | .244 | 12.5 | .003 | 12.5 | | 28250.554 | 65205 | 5.749 | 5.749 | 1.1 | H1-1b |
| 1218 | 20 | M87 | HSS4x0.250 | .792 | 0 | .069 | 0 | | 71625.082 | 89424 | 8.937 | 8.937 | 2.16 | H1-1b |
| 1219 | 20 | M88 | HSS4x0.250 | .486 | 0 | .034 | 0 | | 71625.341 | 89424 | 8.937 | 8.937 | 2.187 | H1-1b |
| 1220 | 20 | M89 | HSS4x0.250 | .795 | 0 | .069 | 0 | | 71625.082 | 89424 | 8.937 | 8.937 | 2.16 | H1-1b |
| 1221 | 21 | M1 | W24x68 w1... | .068 | 0 | .010 | 10.292 | y | 1.73781e... | 2.33302e... | 564.878 | 2134.343 | 1.226 | H1-1b |
| 1222 | 21 | M2 | W24x68 w1... | .055 | 0 | .009 | 10.094 | y | 1.73781e... | 2.33302e... | 564.878 | 2134.343 | 1.49 | H1-1b |
| 1223 | 21 | M3 | W24X68 | .077 | 5.028 | .011 | 0 | y | 492994.2... | 904500 | 91.875 | 274.097 | 3.652 | H1-1b |
| 1224 | 21 | M4 | W24X68 | .040 | .629 | .008 | 1.886 | y | 492994.2... | 904500 | 91.875 | 507.447 | 1 | H1-1b |
| 1225 | 21 | M5 | HSS18x0.500 | .065 | 0 | .006 | 0 | | 687685.7... | 806400 | 375.375 | 375.375 | 2.304 | H1-1b |
| 1226 | 21 | M6 | HSS18x0.500 | .043 | 0 | .003 | 3.175 | | 696116.0... | 806400 | 375.375 | 375.375 | 2.526 | H1-1b* |
| 1227 | 21 | M7 | HSS18x0.500 | .081 | 16.91 | .010 | 16.91 | | 690364.7... | 806400 | 375.375 | 375.375 | 1.475 | H1-1b |
| 1228 | 21 | M8 | HSS18x0.500 | .051 | 0 | .004 | 0 | | 711671.5... | 806400 | 375.375 | 375.375 | 1.818 | H1-1b |
| 1229 | 21 | M29 | L5X5X6 | .065 | 6.822 | .004 | 0 | y | 29906.084 | 118260 | 7.418 | 12.233 | 1.136 | H2-1 |
| 1230 | 21 | M30 | L5X5X6 | .065 | 6.822 | .004 | 0 | z | 29906.084 | 118260 | 7.418 | 12.233 | 1.136 | H2-1 |
| 1231 | 21 | M31 | L5X5X6 | .062 | 6.822 | .003 | 0 | y | 29906.084 | 118260 | 7.418 | 12.233 | 1.136 | H2-1 |
| 1232 | 21 | M32 | L5X5X6 | .062 | 6.822 | .003 | 0 | z | 29906.084 | 118260 | 7.418 | 12.233 | 1.136 | H2-1 |
| 1233 | 21 | M33 | L5X5X6 | .064 | 6.822 | .003 | 0 | y | 29906.084 | 118260 | 7.418 | 12.233 | 1.136 | H2-1 |
| 1234 | 21 | M34 | L5X5X6 | .064 | 6.822 | .003 | 0 | z | 29906.084 | 118260 | 7.418 | 12.233 | 1.136 | H2-1 |
| 1235 | 21 | M35 | L5X5X6 | .062 | 6.822 | .003 | 0 | y | 29906.084 | 118260 | 7.418 | 12.233 | 1.136 | H2-1 |
| 1236 | 21 | M36 | L5X5X6 | .062 | 6.822 | .003 | 0 | z | 29906.084 | 118260 | 7.418 | 12.233 | 1.136 | H2-1 |
| 1237 | 21 | M37 | L5X5X6 | .062 | 6.822 | .003 | 0 | y | 29906.084 | 118260 | 7.418 | 12.233 | 1.136 | H2-1 |
| 1238 | 21 | M38 | L5X5X6 | .062 | 6.822 | .003 | 0 | z | 29906.084 | 118260 | 7.418 | 12.233 | 1.136 | H2-1 |
| 1239 | 21 | M39 | L5X5X6 | .083 | 7.613 | .003 | 0 | y | 74549.701 | 118260 | 7.418 | 11.768 | 1.136 | H2-1 |
| 1240 | 21 | M40 | L5X5X6 | .096 | 7.613 | .003 | 0 | y | 74549.701 | 118260 | 7.418 | 11.768 | 1.136 | H2-1 |
| 1241 | 21 | M41 | L5X5X6 | .091 | 7.613 | .003 | 0 | y | 24012.917 | 118260 | 7.418 | 11.768 | 1.136 | H2-1 |
| 1242 | 21 | M42 | L5X5X6 | .105 | 7.613 | .003 | 15.226 | y | 74549.701 | 118260 | 7.418 | 11.768 | 1.136 | H2-1 |
| 1243 | 21 | M43 | L3.5X3.5X5 | .303 | 9.699 | .003 | 0 | y | 15754.264 | 68040 | 2.882 | 3.881 | 1.136 | H2-1 |
| 1244 | 21 | M44 | L3.5X3.5X5 | .164 | 9.906 | .003 | 0 | y | 15754.264 | 68040 | 2.882 | 3.881 | 1.136 | H2-1 |
| 1245 | 21 | M45 | L5x5x3/8 wH... | .329 | 15.848 | .005 | 0 | y | 30839.58 | 170301.5... | 10.651 | 7.793 | 1.136 | H2-1 |
| 1246 | 21 | M46 | L5x5x3/8 wH... | .215 | 16.185 | .005 | 0 | y | 30839.58 | 170301.5... | 10.651 | 7.793 | 1.136 | H2-1 |
| 1247 | 21 | M47 | WT6X15 | .053 | 6.333 | .004 | 0 | y | 76798.045 | 142560 | 12.906 | 11.902 | 1.136 | H1-1b |

## Member AISC 14th(360-10): LRFD Steel Code Checks (Continued)

| | LC | Member | Shape | UC Max | Loc[ft] | Shear UC | Loc[ft] | Dir | phi*Pnc[lb] | phi*Pnt[lb] | phi*Mnyy... | phi*Mnzz... | Cb | Eqn |
|---|---|---|---|---|---|---|---|---|---|---|---|---|---|---|
| 1248 | 21 | M48 | WT6X15 | .103 | 12.666 | .006 | 12.666 | y | 76798.045 | 142560 | 12.906 | 7.439 | 2.275 | H1-1b |
| 1249 | 21 | M49 | WT6X15 | .043 | 6.048 | .004 | 0 | y | 79928.999 | 142560 | 12.906 | 11.902 | 1.136 | H1-1b |
| 1250 | 21 | M50 | WT6X15 | .095 | 0 | .004 | 12.096 | y | 79928.999 | 142560 | 12.906 | 11.902 | 1.136 | H1-1b* |
| 1251 | 21 | M51 | WT6X15 | .030 | 6.393 | .004 | 0 | y | 76128.484 | 142560 | 12.906 | 11.902 | 1.136 | H1-1b |
| 1252 | 21 | M52 | WT6X15 | .040 | 6.393 | .004 | 0 | y | 76128.484 | 142560 | 12.906 | 11.902 | 1.136 | H1-1b |
| 1253 | 21 | M53 | WT6X15 | .033 | 6.005 | .004 | 12.011 | y | 80394.207 | 142560 | 12.906 | 11.902 | 1.136 | H1-1b |
| 1254 | 21 | M54 | WT6X15 | .041 | 6.005 | .004 | 12.011 | y | 80394.207 | 142560 | 12.906 | 11.902 | 1.136 | H1-1b |
| 1255 | 21 | M55 | WT6X15 | .031 | 6.443 | .004 | 0 | y | 75583.143 | 142560 | 12.906 | 11.902 | 1.136 | H1-1b |
| 1256 | 21 | M56 | WT6X15 | .040 | 6.443 | .004 | 12.885 | y | 75583.143 | 142560 | 12.906 | 11.902 | 1.136 | H1-1b |
| 1257 | 21 | M57 | WT6X15 | .029 | 6.07 | .004 | 12.139 | y | 79692.549 | 142560 | 12.906 | 11.902 | 1.136 | H1-1b |
| 1258 | 21 | M58 | WT6X15 | .042 | 6.07 | .004 | 12.139 | y | 79692.549 | 142560 | 12.906 | 11.902 | 1.136 | H1-1b |
| 1259 | 21 | M59 | WT6X15 | .030 | 6.369 | .004 | 12.738 | y | 76397.946 | 142560 | 12.906 | 11.902 | 1.136 | H1-1b |
| 1260 | 21 | M60 | WT6X15 | .038 | 6.369 | .004 | 0 | y | 76397.946 | 142560 | 12.906 | 11.902 | 1.136 | H1-1b |
| 1261 | 21 | M61 | WT6X15 | .036 | 6.07 | .004 | 0 | y | 79692.549 | 142560 | 12.906 | 11.902 | 1.136 | H1-1b |
| 1262 | 21 | M62 | WT6X15 | .053 | 0 | .004 | 0 | y | 79692.549 | 142560 | 12.906 | 11.902 | 1.136 | H1-1b* |
| 1263 | 21 | M63 | WT6X15 | .040 | 6.369 | .003 | 0 | y | 76397.946 | 142560 | 12.906 | 11.902 | 1.136 | H1-1b |
| 1264 | 21 | M64 | WT6X15 | .042 | 6.369 | .003 | 12.738 | y | 76397.946 | 142560 | 12.906 | 11.902 | 1.136 | H1-1b |
| 1265 | 21 | M65 | WT6X15 | .035 | 5.741 | .004 | 0 | y | 83252.56 | 142560 | 12.906 | 11.902 | 1.136 | H1-1b |
| 1266 | 21 | M66 | WT6X15 | .031 | 5.741 | .005 | 0 | y | 83252.56 | 142560 | 12.906 | 11.902 | 1.136 | H1-1b |
| 1267 | 21 | M71 | HSS8X4X4 | .010 | 0 | .002 | 0 | y | 102691.6... | 169776 | 22.14 | 35.91 | 2.381 | H1-1b |
| 1268 | 21 | M72 | HSS8X4X4 | .010 | 13.5 | .002 | 13.5 | y | 102691.6... | 169776 | 22.14 | 35.91 | 2.381 | H1-1b |
| 1269 | 21 | M75 | HSS6X4X4 | .024 | 0 | .004 | 0 | y | 52673.992 | 139320 | 17.415 | 23.031 | 2.381 | H1-1b |
| 1270 | 21 | M76 | HSS6X4X4 | .024 | 18.182 | .004 | 18.182 | y | 52673.992 | 139320 | 17.415 | 23.031 | 2.381 | H1-1b |
| 1271 | 21 | M77 | HSS6X4X4 | .022 | 0 | .004 | 0 | y | 57728.58 | 139320 | 17.415 | 23.031 | 2.381 | H1-1b |
| 1272 | 21 | M76A | L4x4x5/16 w... | .016 | 7.571 | .001 | 7.571 | y | 59982.319 | 122790.8... | 5.57 | 9.968 | 2.26 | H2-1 |
| 1273 | 21 | M77A | L4x4x5/16 w... | .015 | 7.571 | .001 | 7.571 | y | 59982.319 | 122790.8... | 5.57 | 9.968 | 2.224 | H2-1 |
| 1274 | 21 | M78 | L4x4x5/16 w... | .102 | 14.72 | .002 | 14.72 | y | 16644.398 | 122790.8... | 5.57 | 9.968 | 2.513 | H2-1 |
| 1275 | 21 | M79 | L4x4x5/16 w... | .106 | 14.72 | .002 | 14.72 | y | 16644.398 | 122790.8... | 5.57 | 9.968 | 2.602 | H2-1 |
| 1276 | 21 | M84 | PIPE_3.0 | .221 | 0 | .023 | 0 | | 28250.611 | 65205 | 5.749 | 5.749 | 1.185 | H1-1b |
| 1277 | 21 | M85 | PIPE_3.0 | .224 | 12.5 | .022 | 12.5 | | 28250.611 | 65205 | 5.749 | 5.749 | 1.185 | H1-1b |
| 1278 | 21 | M86 | PIPE_3.0 | .244 | 12.5 | .003 | 12.5 | | 28250.554 | 65205 | 5.749 | 5.749 | 1.101 | H1-1b |
| 1279 | 21 | M87 | HSS4x0.250 | .791 | 0 | .069 | 0 | | 71625.082 | 89424 | 8.937 | 8.937 | 2.16 | H1-1b |
| 1280 | 21 | M88 | HSS4x0.250 | .488 | 0 | .034 | 0 | | 71625.341 | 89424 | 8.937 | 8.937 | 2.186 | H1-1b |
| 1281 | 21 | M89 | HSS4x0.250 | .796 | 0 | .069 | 0 | | 71625.082 | 89424 | 8.937 | 8.937 | 2.16 | H1-1b |
| 1282 | 22 | M1 | W24x68 w1... | .075 | 0 | .010 | 19 | y | 1.73781e... | 2.33302e... | 564.878 | 2134.343 | 1.195 | H1-1b |
| 1283 | 22 | M2 | W24x68 w1... | .061 | 0 | .010 | 19 | y | 1.73781e... | 2.33302e... | 564.878 | 2134.343 | 1.168 | H1-1b |
| 1284 | 22 | M3 | W24X68 | .102 | 5.028 | .012 | 1.886 | y | 492994.2... | 904500 | 91.875 | 238.614 | 3.179 | H1-1b |
| 1285 | 22 | M4 | W24X68 | .049 | 0 | .011 | 1.886 | y | 492994.2... | 904500 | 91.875 | 208.034 | 2.772 | H1-1b |
| 1286 | 22 | M5 | HSS18x0.500 | .055 | 0 | .006 | 0 | | 687685.7... | 806400 | 375.375 | 375.375 | 2.307 | H1-1b |
| 1287 | 22 | M6 | HSS18x0.500 | .021 | 27.708 | .004 | 17.318 | | 696116.0... | 806400 | 375.375 | 375.375 | 2.508 | H1-1b |
| 1288 | 22 | M7 | HSS18x0.500 | .102 | 16.91 | .014 | 16.91 | | 690364.7... | 806400 | 375.375 | 375.375 | 1.475 | H1-1b |
| 1289 | 22 | M8 | HSS18x0.500 | .067 | 0 | .004 | 0 | | 711671.5... | 806400 | 375.375 | 375.375 | 1.818 | H1-1b |
| 1290 | 22 | M29 | L5X5X6 | .061 | 6.822 | .004 | 0 | y | 29906.084 | 118260 | 7.418 | 12.233 | 1.136 | H2-1 |
| 1291 | 22 | M30 | L5X5X6 | .061 | 6.822 | .004 | 0 | z | 29906.084 | 118260 | 7.418 | 12.233 | 1.136 | H2-1 |
| 1292 | 22 | M31 | L5X5X6 | .063 | 6.822 | .003 | 0 | y | 29906.084 | 118260 | 7.418 | 12.233 | 1.136 | H2-1 |
| 1293 | 22 | M32 | L5X5X6 | .063 | 6.822 | .003 | 0 | z | 29906.084 | 118260 | 7.418 | 12.233 | 1.136 | H2-1 |
| 1294 | 22 | M33 | L5X5X6 | .064 | 6.822 | .003 | 0 | y | 29906.084 | 118260 | 7.418 | 12.233 | 1.136 | H2-1 |
| 1295 | 22 | M34 | L5X5X6 | .064 | 6.822 | .003 | 0 | z | 29906.084 | 118260 | 7.418 | 12.233 | 1.136 | H2-1 |
| 1296 | 22 | M35 | L5X5X6 | .063 | 6.822 | .003 | 0 | y | 29906.084 | 118260 | 7.418 | 12.233 | 1.136 | H2-1 |
| 1297 | 22 | M36 | L5X5X6 | .063 | 6.822 | .003 | 0 | z | 29906.084 | 118260 | 7.418 | 12.233 | 1.136 | H2-1 |
| 1298 | 22 | M37 | L5X5X6 | .061 | 6.822 | .003 | 0 | y | 29906.084 | 118260 | 7.418 | 12.233 | 1.136 | H2-1 |
| 1299 | 22 | M38 | L5X5X6 | .061 | 6.822 | .003 | 0 | z | 29906.084 | 118260 | 7.418 | 12.233 | 1.136 | H2-1 |

## Member AISC 14th(360-10): LRFD Steel Code Checks (Continued)

| | LC | Member | Shape | UC Max | Loc[ft] | Shear UC | Loc[ft] | Dir | phi*Pnc[lb] | phi*Pnt[lb] | phi*Mnyy... | phi*Mnzz... | Cb | Eqn |
|---|---|---|---|---|---|---|---|---|---|---|---|---|---|---|
| 1300 | 22 | M39 | L5X5X6 | .086 | 7.613 | .004 | 0 | y | 74549.701 | 118260 | 7.418 | 11.768 | 1.136 | H2-1 |
| 1301 | 22 | M40 | L5X5X6 | .099 | 7.613 | .003 | 0 | y | 74549.701 | 118260 | 7.418 | 11.768 | 1.136 | H2-1 |
| 1302 | 22 | M41 | L5X5X6 | .094 | 7.613 | .003 | 0 | y | 24012.917 | 118260 | 7.418 | 11.768 | 1.136 | H2-1 |
| 1303 | 22 | M42 | L5X5X6 | .110 | 7.613 | .003 | 0 | y | 74549.701 | 118260 | 7.418 | 11.768 | 1.136 | H2-1 |
| 1304 | 22 | M43 | L3.5X3.5X5 | .335 | 9.699 | .003 | 19.812 | y | 15754.264 | 68040 | 2.882 | 3.881 | 1.136 | H2-1 |
| 1305 | 22 | M44 | L3.5X3.5X5 | .165 | 9.906 | .003 | 0 | y | 15754.264 | 68040 | 2.882 | 3.881 | 1.136 | H2-1 |
| 1306 | 22 | M45 | L5x5x3/8 wH... | .348 | 15.848 | .005 | 0 | y | 30839.58 | 170301.5... | 10.651 | 7.793 | 1.136 | H2-1 |
| 1307 | 22 | M46 | L5x5x3/8 wH... | .215 | 16.185 | .005 | 32.37 | y | 30839.58 | 170301.5... | 10.651 | 7.793 | 1.136 | H2-1 |
| 1308 | 22 | M47 | WT6X15 | .084 | 0 | .004 | 12.666 | y | 76798.045 | 142560 | 12.906 | 11.902 | 1.136 | H1-1b* |
| 1309 | 22 | M48 | WT6X15 | .096 | 12.666 | .006 | 12.666 | y | 76798.045 | 142560 | 12.906 | 7.439 | 2.228 | H1-1b |
| 1310 | 22 | M49 | WT6X15 | .053 | 6.048 | .004 | 0 | y | 79928.999 | 142560 | 12.906 | 11.902 | 1.136 | H1-1b |
| 1311 | 22 | M50 | WT6X15 | .084 | 0 | .004 | 0 | y | 79928.999 | 142560 | 12.906 | 11.902 | 1.136 | H1-1b* |
| 1312 | 22 | M51 | WT6X15 | .043 | 6.393 | .004 | 0 | y | 76128.484 | 142560 | 12.906 | 11.902 | 1.136 | H1-1b |
| 1313 | 22 | M52 | WT6X15 | .033 | 6.393 | .004 | 12.787 | y | 76128.484 | 142560 | 12.906 | 11.902 | 1.136 | H1-1b |
| 1314 | 22 | M53 | WT6X15 | .031 | 6.005 | .004 | 0 | y | 80394.207 | 142560 | 12.906 | 11.902 | 1.136 | H1-1b |
| 1315 | 22 | M54 | WT6X15 | .029 | 6.005 | .004 | 0 | y | 80394.207 | 142560 | 12.906 | 11.902 | 1.136 | H1-1b |
| 1316 | 22 | M55 | WT6X15 | .047 | 6.443 | .004 | 12.885 | y | 75583.143 | 142560 | 12.906 | 11.902 | 1.136 | H1-1b |
| 1317 | 22 | M56 | WT6X15 | .034 | 6.443 | .004 | 12.885 | y | 75583.143 | 142560 | 12.906 | 11.902 | 1.136 | H1-1b |
| 1318 | 22 | M57 | WT6X15 | .032 | 6.07 | .004 | 0 | y | 79692.549 | 142560 | 12.906 | 11.902 | 1.136 | H1-1b |
| 1319 | 22 | M58 | WT6X15 | .033 | 6.07 | .004 | 12.139 | y | 79692.549 | 142560 | 12.906 | 11.902 | 1.136 | H1-1b |
| 1320 | 22 | M59 | WT6X15 | .036 | 6.369 | .004 | 0 | y | 76397.946 | 142560 | 12.906 | 11.902 | 1.136 | H1-1b |
| 1321 | 22 | M60 | WT6X15 | .034 | 6.369 | .004 | 0 | y | 76397.946 | 142560 | 12.906 | 11.902 | 1.136 | H1-1b |
| 1322 | 22 | M61 | WT6X15 | .045 | 6.07 | .004 | 12.139 | y | 79692.549 | 142560 | 12.906 | 11.902 | 1.136 | H1-1b |
| 1323 | 22 | M62 | WT6X15 | .043 | 6.07 | .004 | 0 | y | 79692.549 | 142560 | 12.906 | 11.902 | 1.136 | H1-1b |
| 1324 | 22 | M63 | WT6X15 | .059 | 0 | .004 | 12.738 | y | 76397.946 | 142560 | 12.906 | 11.902 | 1.136 | H1-1b* |
| 1325 | 22 | M64 | WT6X15 | .036 | 6.369 | .004 | 12.738 | y | 76397.946 | 142560 | 12.906 | 11.902 | 1.136 | H1-1b |
| 1326 | 22 | M65 | WT6X15 | .031 | 5.741 | .004 | 11.482 | y | 83252.56 | 142560 | 12.906 | 11.902 | 1.136 | H1-1b |
| 1327 | 22 | M66 | WT6X15 | .027 | 5.741 | .005 | 11.482 | y | 83252.56 | 142560 | 12.906 | 11.902 | 1.136 | H1-1b |
| 1328 | 22 | M71 | HSS8X4X4 | .010 | 0 | .002 | 0 | y | 102691.6... | 169776 | 22.14 | 35.91 | 2.381 | H1-1b |
| 1329 | 22 | M72 | HSS8X4X4 | .010 | 13.5 | .002 | 13.5 | y | 102691.6... | 169776 | 22.14 | 35.91 | 2.381 | H1-1b |
| 1330 | 22 | M75 | HSS6X4X4 | .024 | 0 | .004 | 0 | y | 52673.992 | 139320 | 17.415 | 23.031 | 2.381 | H1-1b |
| 1331 | 22 | M76 | HSS6X4X4 | .024 | 18.182 | .004 | 18.182 | y | 52673.992 | 139320 | 17.415 | 23.031 | 2.381 | H1-1b |
| 1332 | 22 | M77 | HSS6X4X4 | .022 | 0 | .004 | 0 | y | 57728.58 | 139320 | 17.415 | 23.031 | 2.381 | H1-1b |
| 1333 | 22 | M76A | L4x4x5/16 w... | .015 | 7.571 | .001 | 7.571 | y | 59982.319 | 122790.8... | 5.57 | 9.968 | 2.467 | H2-1 |
| 1334 | 22 | M77A | L4x4x5/16 w... | .014 | 7.571 | .001 | 7.571 | y | 59982.319 | 122790.8... | 5.57 | 9.968 | 2.31 | H2-1 |
| 1335 | 22 | M78 | L4x4x5/16 w... | .100 | 14.72 | .002 | 14.72 | y | 16644.398 | 122790.8... | 5.57 | 9.968 | 2.515 | H2-1 |
| 1336 | 22 | M79 | L4x4x5/16 w... | .103 | 14.72 | .002 | 14.72 | y | 16644.398 | 122790.8... | 5.57 | 9.968 | 2.555 | H2-1 |
| 1337 | 22 | M84 | PIPE_3.0 | .222 | 0 | .023 | 0 | | 28250.611 | 65205 | 5.749 | 5.749 | 1.185 | H1-1b |
| 1338 | 22 | M85 | PIPE_3.0 | .224 | 12.5 | .022 | 12.5 | | 28250.611 | 65205 | 5.749 | 5.749 | 1.184 | H1-1b |
| 1339 | 22 | M86 | PIPE_3.0 | .244 | 12.5 | .003 | 12.5 | | 28250.554 | 65205 | 5.749 | 5.749 | 1.101 | H1-1b |
| 1340 | 22 | M87 | HSS4x0.250 | .790 | 0 | .069 | 0 | | 71625.082 | 89424 | 8.937 | 8.937 | 2.16 | H1-1b |
| 1341 | 22 | M88 | HSS4x0.250 | .489 | 0 | .034 | 0 | | 71625.341 | 89424 | 8.937 | 8.937 | 2.186 | H1-1b |
| 1342 | 22 | M89 | HSS4x0.250 | .795 | 0 | .069 | 0 | | 71625.082 | 89424 | 8.937 | 8.937 | 2.16 | H1-1b |
| 1343 | 23 | M1 | W24x68 w1... | .074 | 0 | .010 | 2.969 | y | 1.73781e... | 2.33302e... | 564.878 | 2134.343 | 1.565 | H1-1b |
| 1344 | 23 | M2 | W24x68 w1... | .061 | 0 | .010 | 10.292 | y | 1.73781e... | 2.33302e... | 564.878 | 2134.343 | 1.304 | H1-1b |
| 1345 | 23 | M3 | W24X68 | .107 | 4.4 | .009 | 1.886 | y | 492994.2... | 904500 | 91.875 | 211.401 | 2.817 | H1-1b |
| 1346 | 23 | M4 | W24X68 | .068 | 0 | .011 | .629 | y | 492994.2... | 904500 | 91.875 | 186.383 | 2.483 | H1-1b |
| 1347 | 23 | M5 | HSS18x0.500 | .039 | 0 | .006 | 0 | | 687685.7... | 806400 | 375.375 | 375.375 | 2.305 | H1-1b |
| 1348 | 23 | M6 | HSS18x0.500 | .018 | 27.708 | .004 | 17.318 | | 696116.0... | 806400 | 375.375 | 375.375 | 2.52 | H1-1b |
| 1349 | 23 | M7 | HSS18x0.500 | .116 | 17.206 | .016 | 16.91 | | 690364.7... | 806400 | 375.375 | 375.375 | 1.475 | H1-1b |
| 1350 | 23 | M8 | HSS18x0.500 | .078 | 0 | .005 | 0 | | 711671.5... | 806400 | 375.375 | 375.375 | 1.818 | H1-1b |
| 1351 | 23 | M29 | L5X5X6 | .063 | 6.822 | .004 | 0 | y | 29906.084 | 118260 | 7.418 | 12.233 | 1.136 | H2-1 |

## Member AISC 14th(360-10): LRFD Steel Code Checks (Continued)

| | LC | Member | Shape | UC Max | Loc[ft] | Shear UC | Loc[ft] | Dir | phi*Pnc[lb] | phi*Pnt[lb] | phi*Mnyy... | phi*Mnzz... | Cb | Eqn |
|---|---|---|---|---|---|---|---|---|---|---|---|---|---|---|
| 1352 | 23 | M30 | L5X5X6 | .063 | 6.822 | .004 | 0 | z | 29906.084 | 118260 | 7.418 | 12.233 | 1.136 | H2-1 |
| 1353 | 23 | M31 | L5X5X6 | .063 | 6.822 | .003 | 0 | y | 29906.084 | 118260 | 7.418 | 12.233 | 1.136 | H2-1 |
| 1354 | 23 | M32 | L5X5X6 | .063 | 6.822 | .003 | 0 | z | 29906.084 | 118260 | 7.418 | 12.233 | 1.136 | H2-1 |
| 1355 | 23 | M33 | L5X5X6 | .065 | 6.822 | .003 | 0 | y | 29906.084 | 118260 | 7.418 | 12.233 | 1.136 | H2-1 |
| 1356 | 23 | M34 | L5X5X6 | .065 | 6.822 | .003 | 0 | z | 29906.084 | 118260 | 7.418 | 12.233 | 1.136 | H2-1 |
| 1357 | 23 | M35 | L5X5X6 | .064 | 6.822 | .003 | 0 | y | 29906.084 | 118260 | 7.418 | 12.233 | 1.136 | H2-1 |
| 1358 | 23 | M36 | L5X5X6 | .064 | 6.822 | .003 | 0 | z | 29906.084 | 118260 | 7.418 | 12.233 | 1.136 | H2-1 |
| 1359 | 23 | M37 | L5X5X6 | .061 | 6.822 | .003 | 0 | y | 29906.084 | 118260 | 7.418 | 12.233 | 1.136 | H2-1 |
| 1360 | 23 | M38 | L5X5X6 | .061 | 6.822 | .003 | 0 | z | 29906.084 | 118260 | 7.418 | 12.233 | 1.136 | H2-1 |
| 1361 | 23 | M39 | L5X5X6 | .083 | 7.613 | .003 | 15.226 | y | 74549.701 | 118260 | 7.418 | 11.768 | 1.136 | H2-1 |
| 1362 | 23 | M40 | L5X5X6 | .094 | 7.613 | .003 | 15.226 | y | 74549.701 | 118260 | 7.418 | 11.768 | 1.136 | H2-1 |
| 1363 | 23 | M41 | L5X5X6 | .091 | 7.613 | .003 | 15.226 | y | 24012.917 | 118260 | 7.418 | 11.768 | 1.136 | H2-1 |
| 1364 | 23 | M42 | L5X5X6 | .104 | 7.613 | .003 | 15.226 | y | 74549.701 | 118260 | 7.418 | 11.768 | 1.136 | H2-1 |
| 1365 | 23 | M43 | L3.5X3.5X5 | .328 | 9.699 | .003 | 0 | y | 15754.264 | 68040 | 2.882 | 3.881 | 1.136 | H2-1 |
| 1366 | 23 | M44 | L3.5X3.5X5 | .156 | 9.906 | .003 | 0 | y | 15754.264 | 68040 | 2.882 | 3.881 | 1.136 | H2-1 |
| 1367 | 23 | M45 | L5x5x3/8 wH... | .344 | 15.848 | .005 | 32.37 | y | 30839.58 | 170301.5... | 10.651 | 7.793 | 1.136 | H2-1 |
| 1368 | 23 | M46 | L5x5x3/8 wH... | .211 | 16.185 | .005 | 32.37 | y | 30839.58 | 170301.5... | 10.651 | 7.793 | 1.136 | H2-1 |
| 1369 | 23 | M47 | WT6X15 | .097 | 0 | .004 | 12.666 | y | 76798.045 | 142560 | 12.906 | 11.902 | 1.136 | H1-1b* |
| 1370 | 23 | M48 | WT6X15 | .071 | 12.666 | .005 | 12.666 | y | 76798.045 | 142560 | 12.906 | 7.439 | 2.233 | H1-1b |
| 1371 | 23 | M49 | WT6X15 | .056 | 6.048 | .004 | 12.096 | y | 79928.999 | 142560 | 12.906 | 11.902 | 1.136 | H1-1b |
| 1372 | 23 | M50 | WT6X15 | .051 | 6.048 | .004 | 0 | y | 79928.999 | 142560 | 12.906 | 11.902 | 1.136 | H1-1b |
| 1373 | 23 | M51 | WT6X15 | .059 | 0 | .004 | 0 | y | 76128.484 | 142560 | 12.906 | 11.902 | 1.136 | H1-1b* |
| 1374 | 23 | M52 | WT6X15 | .036 | 6.393 | .004 | 12.787 | y | 76128.484 | 142560 | 12.906 | 11.902 | 1.136 | H1-1b |
| 1375 | 23 | M53 | WT6X15 | .038 | 6.005 | .004 | 0 | y | 80394.207 | 142560 | 12.906 | 11.902 | 1.136 | H1-1b |
| 1376 | 23 | M54 | WT6X15 | .032 | 6.005 | .004 | 12.011 | y | 80394.207 | 142560 | 12.906 | 11.902 | 1.136 | H1-1b |
| 1377 | 23 | M55 | WT6X15 | .060 | 0 | .004 | 12.885 | y | 75583.143 | 142560 | 12.906 | 11.902 | 1.136 | H1-1b* |
| 1378 | 23 | M56 | WT6X15 | .032 | 6.443 | .004 | 0 | y | 75583.143 | 142560 | 12.906 | 11.902 | 1.136 | H1-1b |
| 1379 | 23 | M57 | WT6X15 | .037 | 6.07 | .004 | 0 | y | 79692.549 | 142560 | 12.906 | 11.902 | 1.136 | H1-1b |
| 1380 | 23 | M58 | WT6X15 | .029 | 6.07 | .004 | 12.139 | y | 79692.549 | 142560 | 12.906 | 11.902 | 1.136 | H1-1b |
| 1381 | 23 | M59 | WT6X15 | .043 | 6.369 | .004 | 0 | y | 76397.946 | 142560 | 12.906 | 11.902 | 1.136 | H1-1b |
| 1382 | 23 | M60 | WT6X15 | .029 | 6.369 | .004 | 12.738 | y | 76397.946 | 142560 | 12.906 | 11.902 | 1.136 | H1-1b |
| 1383 | 23 | M61 | WT6X15 | .051 | 6.07 | .004 | 0 | y | 79692.549 | 142560 | 12.906 | 11.902 | 1.136 | H1-1b |
| 1384 | 23 | M62 | WT6X15 | .027 | 6.07 | .004 | 0 | y | 79692.549 | 142560 | 12.906 | 11.902 | 1.136 | H1-1b |
| 1385 | 23 | M63 | WT6X15 | .082 | 0 | .004 | 0 | y | 76397.946 | 142560 | 12.906 | 11.902 | 1.136 | H1-1b* |
| 1386 | 23 | M64 | WT6X15 | .030 | 6.369 | .004 | 12.738 | y | 76397.946 | 142560 | 12.906 | 11.902 | 1.136 | H1-1b |
| 1387 | 23 | M65 | WT6X15 | .026 | 5.741 | .004 | 11.482 | y | 83252.56 | 142560 | 12.906 | 11.902 | 1.136 | H1-1b |
| 1388 | 23 | M66 | WT6X15 | .027 | 5.741 | .005 | 0 | y | 83252.56 | 142560 | 12.906 | 11.902 | 1.136 | H1-1b |
| 1389 | 23 | M71 | HSS8X4X4 | .010 | 0 | .002 | 0 | y | 102691.6... | 169776 | 22.14 | 35.91 | 2.381 | H1-1b |
| 1390 | 23 | M72 | HSS8X4X4 | .010 | 13.5 | .002 | 13.5 | y | 102691.6... | 169776 | 22.14 | 35.91 | 2.381 | H1-1b |
| 1391 | 23 | M75 | HSS6X4X4 | .024 | 0 | .004 | 0 | y | 52673.992 | 139320 | 17.415 | 23.031 | 2.381 | H1-1b |
| 1392 | 23 | M76 | HSS6X4X4 | .024 | 18.182 | .004 | 18.182 | y | 52673.992 | 139320 | 17.415 | 23.031 | 2.381 | H1-1b |
| 1393 | 23 | M77 | HSS6X4X4 | .022 | 0 | .004 | 0 | y | 57728.58 | 139320 | 17.415 | 23.031 | 2.381 | H1-1b |
| 1394 | 23 | M76A | L4x4x5/16 w... | .014 | 7.571 | .001 | 7.571 | y | 59982.319 | 122790.8... | 5.57 | 9.968 | 2.453 | H2-1 |
| 1395 | 23 | M77A | L4x4x5/16 w... | .014 | 7.571 | .001 | 7.571 | y | 59982.319 | 122790.8... | 5.57 | 9.968 | 2.391 | H2-1 |
| 1396 | 23 | M78 | L4x4x5/16 w... | .099 | 14.72 | .002 | 14.72 | y | 16644.398 | 122790.8... | 5.57 | 9.968 | 2.509 | H2-1 |
| 1397 | 23 | M79 | L4x4x5/16 w... | .101 | 14.72 | .002 | 14.72 | y | 16644.398 | 122790.8... | 5.57 | 9.968 | 2.509 | H2-1 |
| 1398 | 23 | M84 | PIPE_3.0 | .222 | 0 | .023 | 0 | | 28250.611 | 65205 | 5.749 | 5.749 | 1.184 | H1-1b |
| 1399 | 23 | M85 | PIPE_3.0 | .222 | 12.5 | .022 | 12.5 | | 28250.611 | 65205 | 5.749 | 5.749 | 1.184 | H1-1b |
| 1400 | 23 | M86 | PIPE_3.0 | .245 | 12.5 | .003 | 12.5 | | 28250.554 | 65205 | 5.749 | 5.749 | 1.101 | H1-1b |
| 1401 | 23 | M87 | HSS4x0.250 | .790 | 0 | .069 | 0 | | 71625.082 | 89424 | 8.937 | 8.937 | 2.16 | H1-1b |
| 1402 | 23 | M88 | HSS4x0.250 | .491 | 0 | .034 | 0 | | 71625.341 | 89424 | 8.937 | 8.937 | 2.186 | H1-1b |
| 1403 | 23 | M89 | HSS4x0.250 | .793 | 0 | .069 | 0 | | 71625.082 | 89424 | 8.937 | 8.937 | 2.16 | H1-1b |

## Member AISC 14th(360-10): LRFD Steel Code Checks (Continued)

| | LC | Member | Shape | UC Max | Loc[ft] | Shear UC | Loc[ft] | Dir | phi*Pnc[lb] | phi*Pnt[lb] | phi*Mnyy... | phi*Mnzz... | Cb | Eqn |
|---|---|---|---|---|---|---|---|---|---|---|---|---|---|---|
| 1404 | 24 | M1 | W24x68 w1... | .070 | 0 | .013 | 0 | y | 1.73781e... | 2.33302e... | 564.878 | 2134.343 | 2.934 | H1-1b |
| 1405 | 24 | M2 | W24x68 w1... | .047 | 0 | .009 | 1.583 | y | 1.73781e... | 2.33302e... | 564.878 | 2134.343 | 1.596 | H1-1b |
| 1406 | 24 | M3 | W24X68 | .094 | 4.4 | .004 | 1.886 | z | 492994.2... | 904500 | 91.875 | 165.886 | 2.21 | H1-1b |
| 1407 | 24 | M4 | W24X68 | .078 | 0 | .008 | 0 | y | 492994.2... | 904500 | 91.875 | 172.778 | 2.302 | H1-1b |
| 1408 | 24 | M5 | HSS18x0.500 | .038 | 0 | .004 | 0 | | 687685.7... | 806400 | 375.375 | 375.375 | 2.292 | H1-1b |
| 1409 | 24 | M6 | HSS18x0.500 | .017 | 27.708 | .004 | 17.318 | | 696116.0... | 806400 | 375.375 | 375.375 | 2.598 | H1-1b |
| 1410 | 24 | M7 | HSS18x0.500 | .123 | 17.206 | .016 | 16.91 | | 690364.7... | 806400 | 375.375 | 375.375 | 1.476 | H1-1b |
| 1411 | 24 | M8 | HSS18x0.500 | .084 | 0 | .005 | 0 | | 711671.5... | 806400 | 375.375 | 375.375 | 1.818 | H1-1b |
| 1412 | 24 | M29 | L5X5X6 | .065 | 6.822 | .003 | 0 | y | 29906.084 | 118260 | 7.418 | 12.233 | 1.136 | H2-1 |
| 1413 | 24 | M30 | L5X5X6 | .065 | 6.822 | .003 | 0 | z | 29906.084 | 118260 | 7.418 | 12.233 | 1.136 | H2-1 |
| 1414 | 24 | M31 | L5X5X6 | .063 | 6.822 | .003 | 0 | y | 29906.084 | 118260 | 7.418 | 12.233 | 1.136 | H2-1 |
| 1415 | 24 | M32 | L5X5X6 | .063 | 6.822 | .003 | 0 | z | 29906.084 | 118260 | 7.418 | 12.233 | 1.136 | H2-1 |
| 1416 | 24 | M33 | L5X5X6 | .065 | 6.822 | .003 | 0 | y | 29906.084 | 118260 | 7.418 | 12.233 | 1.136 | H2-1 |
| 1417 | 24 | M34 | L5X5X6 | .065 | 6.822 | .003 | 0 | z | 29906.084 | 118260 | 7.418 | 12.233 | 1.136 | H2-1 |
| 1418 | 24 | M35 | L5X5X6 | .065 | 6.822 | .003 | 0 | y | 29906.084 | 118260 | 7.418 | 12.233 | 1.136 | H2-1 |
| 1419 | 24 | M36 | L5X5X6 | .065 | 6.822 | .003 | 0 | z | 29906.084 | 118260 | 7.418 | 12.233 | 1.136 | H2-1 |
| 1420 | 24 | M37 | L5X5X6 | .060 | 6.822 | .003 | 0 | y | 29906.084 | 118260 | 7.418 | 12.233 | 1.136 | H2-1 |
| 1421 | 24 | M38 | L5X5X6 | .061 | 6.822 | .003 | 0 | z | 29906.084 | 118260 | 7.418 | 12.233 | 1.136 | H2-1 |
| 1422 | 24 | M39 | L5X5X6 | .076 | 7.613 | .003 | 0 | y | 74549.701 | 118260 | 7.418 | 11.768 | 1.136 | H2-1 |
| 1423 | 24 | M40 | L5X5X6 | .082 | 7.613 | .003 | 15.226 | y | 74549.701 | 118260 | 7.418 | 11.768 | 1.136 | H2-1 |
| 1424 | 24 | M41 | L5X5X6 | .080 | 7.613 | .003 | 15.226 | y | 24012.917 | 118260 | 7.418 | 11.768 | 1.136 | H2-1 |
| 1425 | 24 | M42 | L5X5X6 | .088 | 7.613 | .003 | 0 | y | 74549.701 | 118260 | 7.418 | 11.768 | 1.136 | H2-1 |
| 1426 | 24 | M43 | L3.5X3.5X5 | .280 | 9.699 | .003 | 19.812 | y | 15754.264 | 68040 | 2.882 | 3.881 | 1.136 | H2-1 |
| 1427 | 24 | M44 | L3.5X3.5X5 | .140 | 9.906 | .003 | 0 | y | 15754.264 | 68040 | 2.882 | 3.881 | 1.136 | H2-1 |
| 1428 | 24 | M45 | L5x5x3/8 wH... | .317 | 15.848 | .005 | 0 | y | 30839.58 | 170301.5... | 10.651 | 7.793 | 1.136 | H2-1 |
| 1429 | 24 | M46 | L5x5x3/8 wH... | .236 | 15.848 | .005 | 32.37 | y | 30839.58 | 170301.5... | 10.651 | 7.793 | 1.136 | H2-1 |
| 1430 | 24 | M47 | WT6X15 | .085 | 0 | .004 | 0 | y | 76798.045 | 142560 | 12.906 | 11.902 | 1.136 | H1-1b* |
| 1431 | 24 | M48 | WT6X15 | .036 | 12.666 | .004 | 12.666 | y | 76798.045 | 142560 | 12.906 | 7.439 | 2.063 | H1-1b |
| 1432 | 24 | M49 | WT6X15 | .052 | 6.048 | .004 | 12.096 | y | 79928.999 | 142560 | 12.906 | 11.902 | 1.136 | H1-1b |
| 1433 | 24 | M50 | WT6X15 | .027 | 6.048 | .004 | 0 | y | 79928.999 | 142560 | 12.906 | 11.902 | 1.136 | H1-1b |
| 1434 | 24 | M51 | WT6X15 | .074 | 0 | .004 | 12.787 | y | 76128.484 | 142560 | 12.906 | 11.902 | 1.136 | H1-1b* |
| 1435 | 24 | M52 | WT6X15 | .052 | 6.393 | .004 | 12.787 | y | 76128.484 | 142560 | 12.906 | 11.902 | 1.136 | H1-1b |
| 1436 | 24 | M53 | WT6X15 | .042 | 6.005 | .004 | 0 | y | 80394.207 | 142560 | 12.906 | 11.902 | 1.136 | H1-1b |
| 1437 | 24 | M54 | WT6X15 | .039 | 6.005 | .003 | 12.011 | y | 80394.207 | 142560 | 12.906 | 11.902 | 1.136 | H1-1b |
| 1438 | 24 | M55 | WT6X15 | .069 | 0 | .004 | 12.885 | y | 75583.143 | 142560 | 12.906 | 11.902 | 1.136 | H1-1b* |
| 1439 | 24 | M56 | WT6X15 | .047 | 6.443 | .004 | 0 | y | 75583.143 | 142560 | 12.906 | 11.902 | 1.136 | H1-1b |
| 1440 | 24 | M57 | WT6X15 | .040 | 6.07 | .004 | 0 | y | 79692.549 | 142560 | 12.906 | 11.902 | 1.136 | H1-1b |
| 1441 | 24 | M58 | WT6X15 | .035 | 6.07 | .004 | 12.139 | y | 79692.549 | 142560 | 12.906 | 11.902 | 1.136 | H1-1b |
| 1442 | 24 | M59 | WT6X15 | .046 | 6.369 | .004 | 0 | y | 76397.946 | 142560 | 12.906 | 11.902 | 1.136 | H1-1b |
| 1443 | 24 | M60 | WT6X15 | .035 | 6.369 | .004 | 0 | y | 76397.946 | 142560 | 12.906 | 11.902 | 1.136 | H1-1b |
| 1444 | 24 | M61 | WT6X15 | .051 | 6.07 | .004 | 0 | y | 79692.549 | 142560 | 12.906 | 11.902 | 1.136 | H1-1b |
| 1445 | 24 | M62 | WT6X15 | .037 | 6.07 | .003 | 12.139 | y | 79692.549 | 142560 | 12.906 | 11.902 | 1.136 | H1-1b |
| 1446 | 24 | M63 | WT6X15 | .087 | 0 | .004 | 0 | y | 76397.946 | 142560 | 12.906 | 11.902 | 1.136 | H1-1b* |
| 1447 | 24 | M64 | WT6X15 | .048 | 6.369 | .004 | 12.738 | y | 76397.946 | 142560 | 12.906 | 11.902 | 1.136 | H1-1b |
| 1448 | 24 | M65 | WT6X15 | .028 | 5.741 | .004 | 0 | y | 83252.56 | 142560 | 12.906 | 11.902 | 1.136 | H1-1b |
| 1449 | 24 | M66 | WT6X15 | .028 | 5.741 | .005 | 11.482 | y | 83252.56 | 142560 | 12.906 | 11.902 | 1.136 | H1-1b |
| 1450 | 24 | M71 | HSS8X4X4 | .010 | 0 | .002 | 0 | y | 102691.6... | 169776 | 22.14 | 35.91 | 2.381 | H1-1b |
| 1451 | 24 | M72 | HSS8X4X4 | .010 | 13.5 | .002 | 13.5 | y | 102691.6... | 169776 | 22.14 | 35.91 | 2.381 | H1-1b |
| 1452 | 24 | M75 | HSS6X4X4 | .024 | 0 | .004 | 0 | y | 52673.992 | 139320 | 17.415 | 23.031 | 2.381 | H1-1b |
| 1453 | 24 | M76 | HSS6X4X4 | .024 | 18.182 | .004 | 18.182 | y | 52673.992 | 139320 | 17.415 | 23.031 | 2.381 | H1-1b |
| 1454 | 24 | M77 | HSS6X4X4 | .022 | 0 | .004 | 0 | y | 57728.58 | 139320 | 17.415 | 23.031 | 2.381 | H1-1b |
| 1455 | 24 | M76A | L4x4x5/16 w... | .013 | 7.571 | .001 | 7.571 | y | 59982.319 | 122790.8... | 5.57 | 9.968 | 2.197 | H2-1 |

## Member AISC 14th(360-10): LRFD Steel Code Checks (Continued)

| | LC | Member | Shape | UC Max | Loc[ft] | Shear UC | Loc[ft] | Dir | phi*Pnc[lb] | phi*Pnt[lb] | phi*Mnyy... | phi*Mnzz... | Cb | Eqn |
|---|---|---|---|---|---|---|---|---|---|---|---|---|---|---|
| 1456 | 24 | M77A | L4x4x5/16 w... | .013 | 7.571 | .001 | 7.571 | y | 59982.319 | 122790.8... | 5.57 | 9.968 | 2.447 | H2-1 |
| 1457 | 24 | M78 | L4x4x5/16 w... | .098 | 14.72 | .002 | 14.72 | y | 16644.398 | 122790.8... | 5.57 | 9.968 | 2.496 | H2-1 |
| 1458 | 24 | M79 | L4x4x5/16 w... | .098 | 14.72 | .002 | 14.72 | y | 16644.398 | 122790.8... | 5.57 | 9.968 | 2.477 | H2-1 |
| 1459 | 24 | M84 | PIPE_3.0 | .221 | 0 | .022 | 0 | | 28250.611 | 65205 | 5.749 | 5.749 | 1.184 | H1-1b |
| 1460 | 24 | M85 | PIPE_3.0 | .221 | 12.5 | .022 | 12.5 | | 28250.611 | 65205 | 5.749 | 5.749 | 1.184 | H1-1b |
| 1461 | 24 | M86 | PIPE_3.0 | .246 | 12.5 | .003 | 12.5 | | 28250.554 | 65205 | 5.749 | 5.749 | 1.101 | H1-1b |
| 1462 | 24 | M87 | HSS4x0.250 | .790 | 0 | .069 | 0 | | 71625.082 | 89424 | 8.937 | 8.937 | 2.16 | H1-1b |
| 1463 | 24 | M88 | HSS4x0.250 | .493 | 0 | .034 | 0 | | 71625.341 | 89424 | 8.937 | 8.937 | 2.186 | H1-1b |
| 1464 | 24 | M89 | HSS4x0.250 | .791 | 0 | .069 | 0 | | 71625.082 | 89424 | 8.937 | 8.937 | 2.16 | H1-1b |

| | | |
|---|---|---|
| Site Name: | CROMWELLSW CT, CT | *Program Last Updated:* *5/13/2014* |
| Site Number: | 411261 | |
| Engineering Number: | 12925565 | |
| Engineer: | Travis.Gatling | |
| Date: | 07/18/19 | |
| Tower Type: | SST w/3 Legs | |

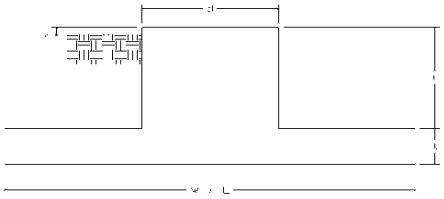

**Design Loads (Factored) - Analysis per TIA-222-G Standards**

| | | |
|---|---|---|
| Design / Analysis / Mapping: | Mapping | |
| Compression/Leg: | 152.1 | k |
| Uplift/Leg: | | k |
| Total Shear: | 38.6 | k |
| Moment: | 2120.7 | k-ft |
| Tower + Appurtenance Weight: | 50.0 | k |
| Depth to Base of Foundation (l + t - h): | 3 | ft |
| Diameter of Pier (d): | 0.75 | ft |
| Height of Pier above Ground (h): | 0.5 | ft |
| Width of Pad (W): | 26.5 | ft |
| Length of Pad (L): | 16 | ft |
| Thickness of Pad (t): | 3 | ft |
| Tower Leg Center to Center: | 13 | ft |
| Number of Tower Legs: | 3 | (1 if MP or GT) |
| Tower Center from Mat Center: | 0 | ft |
| Depth Below Ground Surface to Water Table: | 99 | ft |
| Unit Weight of Concrete: | 150 | pcf |
| Unit Weight of Soil Above Water Table: | 110 | pcf |
| Unit Weight of Water: | 62.4 | pcf |
| Unit Weight of Soil Below Water Table: | 47.6 | pcf |
| Friction Angle of Uplift: | 15 | Degrees |
| Ultimate Coefficient of Shear Friction: | 0.3 | |
| Ultimate Compressive Bearing Pressure: | 30000 | psf |
| Ultimate Passive Pressure on Pad Face: | 0 | psf |
| $\phi_{\text{Soil and Concrete Weight}}$: | 0.9 | |
| $\phi_{\text{Soil}}$: | 0.75 | |

**Overturning Moment Usage**

| | | |
|---|---|---|
| Design OTM: | 2255.7 | k-ft |
| OTM Resistance: | 4266.2 | k-ft |
| Design OTM / OTM Resistance: | 0.53 | Result: OK |

**Soil Bearing Pressure Usage**

| | | |
|---|---|---|
| Net Bearing Pressure: | 5628 | psf |
| Factored Nominal Bearing Pressure: | 22500 | psf |
| Net Bearing Pressure/Factored Nominal Bearing Pressure: | 0.25 | Result: OK |
| Load Direction Controling Design Bearing Pressure: | Diagonal to Pad Edge | |

**Sliding Factor of Safety**

| | | |
|---|---|---|
| Total Factored Sliding Resistance: | 52.3 | k |
| Sliding Design / Sliding Resistance: | 0.74 | Result: OK |

# Exhibit E

## Mount Analysis

# Mount Analysis of Existing Low Profile Platform for American Tower on behalf of T-Mobile
# 411261 - CROMWELLSW CT
# Project #: 12925565

**T-Mobile Site ID: CTHA240A**
**Program: L600**

**CLS Engineering PLLC Project #41124-12925565-01-MA-R1**
**July 9, 2019**

| | |
|---|---|
| **MOUNT DESCRIPTION** | Existing Low Profile Platform at 108 ft AGL |
| **ANTENNA ELEVATION** | Nominal Rad. Elevation of 108 ft AGL |
| **SITE DESCRIPTION** | 111 ft Monopole |
| **SITE ADDRESS** | 99 Christian Hill Road, Cromwell, CT, 06416-2612, Middlesex County |
| **GPS COORDINATES** | 41.60621, -72.701206 |
| **ANALYSIS STANDARD** | 2015 IBC / 2018 Connecticut State Building Code / TIA-222-G |
| **LOADING CRITERIA** | 125 mph, $V_{ult}$ / 96.8 mph, $V_{asd}$ (3-Second Gust) w/o ice & 50 mph (3-Second Gust) w/ 1" Ice |

- **ANALYSIS RESULT:** **Pass (Conditional)**

| | | |
|---|---|---|
| **MEMBER USAGE** | **64%** | **Pass** |

**Modifications are proposed to bring mounts into compliance; see conclusion for details.**


Prepared by:
**Sean Rock, E.I.**

Reviewed and Approved by:
**Tyler M. Barker, P.E.**


STATE OF CONNECTICUT
TYLER M BARKER
No. 32402
LICENSED
PROFESSIONAL ENGINEER

Tyler M. Barker
CLS Engineering, PLLC
Director of Engineering
PE # 32402 Exp. 1/31/2020
COA # PEC.001833 Exp. 8/14/2019

identTrust part of HID Global

Digitally signed by Tyler Barker
DN: c=US, o=Telamon Corporation, ou=A01427E0000016A4525ADF800001D17, cn=Tyler Barker
Date: 2019.07.09 13:45:26 -04'00'

## ■ INTRODUCTION

The proposed equipment is to be mounted to the existing Low Profile Platform. This proposed mounting configuration was analyzed using RISA-3D, a commercially available finite element analysis software package. A selection of input and output from our analysis is attached to the end of this report.

## ■ STRUCTURAL DOCUMENTS PROVIDED

| | |
|---|---|
| **STRUCTURAL DATA** | Site Photos April 3, 2018<br>Tower Mapping by Engineered Tower Solutions, Project #150929.01, dated August 21, 2015<br>Assembly Drawings by Site Pro 1, Part No. PRK-1245, dated April 10, 2014 |
| **PREVIOUS ANALYSES** | Structural Analysis by American Tower Corporation, Engineering #OAA702243_C3_01, dated May 22, 2017 |
| **LOADING DATA** | Application by American Tower Corporation, dated March 26, 2019 |

## ■ ANALYSIS CRITERIA

| | |
|---|---|
| **STANDARD** | 2015 IBC / 2018 Connecticut State Building Code / TIA-222-G |
| **BASIC WIND SPEED** | 125 mph, $V_{ult}$ / 96.8 mph, $V_{asd}$ (3-Second Gust) |
| **BASIC WIND SPEED W/ ICE** | 50 mph (3-Second Gust) w/ 1" Radial Ice (Escalating) |
| **EXPOSURE CATEGORY** | B |
| **MAX. TOPOGRAPHIC FACTOR, $K_{zt}$** | 1.00 |
| **RISK CATEGORY** | II |
| **MAINTENANCE LIVE LOAD** | $L_M$: 500 lb |

## ■ FINAL EQUIPMENT

| ELEVATION (ft) | | ANTENNAS | |
|---|---|---|---|
| **MOUNT** | **RAD.** | **#** | **NAME** |
| 108.0 | 108.0 | 3 | Ericsson AIR 32 B2A/B66AA |
| | | 3 | Ericsson RADIO 4449 B12/B71 |
| | | 3 | Ericsson KRY 112 144/1 |
| | | 3 | RFS Celwave APXVAARR24_43-U-NA20 |

## ■ RESULTS SUMMARY

| COMPONENT | PEAK USAGE | RESULT |
|---|---|---|
| Mount Pipes | 64% | Pass |
| Platform Base | 62% | Pass |
| Collar Reactions | 60% | Pass |
| Corner Plates | 57% | Pass |
| Face Horizontals | 40% | Pass |
| Stand-Off Horizontals | 25% | Pass |

## ■ CONCLUSION AND RECOMMENDATIONS

According to our structural analysis, the mounts have been found to **CONDITIONALLY PASS**. The mounting configuration considered in this analysis will be capable of supporting the referenced loading pursuant to referenced standards once the following scope is executed:

- **Install (1) proposed Site Pro 1 PRK-1245 platform reinforcement kit on existing platform mount as shown in the following sketches. Field-cut proposed members as required. Maintain minimum bolt edge distance. Re-secure coax after installation of proposed kit. DO NOT PINCH SAFETY CLIMB.**

See following sketches and Site Pro 1 assembly drawings for additional details.

## ■ ASSUMPTIONS AND CONDITIONS

This analysis is inclusive of the antenna supporting frames/mounts and all recorded connections that will support the equipment listed in this report. It considers only the theoretical capacity of structural components and it is not a condition assessment. The validity of the analysis may be dependent on the accuracy of structural information supplied by others. The client is responsible for verifying this information. If any provided information is revised after completion of this analysis, CLS Engineering PLLC should be notified immediately to revise results.

This analysis assumes the following:

1. The tower or other superstructure and mounts (if existing) were properly constructed as per the original design and have been properly maintained in accordance with applicable code standards.
2. Member sizes and strengths are accurate as supplied or are assumed as stated in the calculations.
3. In the absence of sufficient design information, all welds and connections are assumed to develop at least the capacity of the connected member, unless otherwise stated in this analysis.
4. All prior structural modifications, if any, are assumed to be correctly installed and fully effective.
5. The loading configuration is complete and accurate as supplied and/or as modeled in the previous analysis. All appurtenances are assumed to be properly installed and supported as per manufacturer requirements.
6. Some conservative assumptions may be used regarding appurtenances and their projected areas based on careful interpretation of data supplied, previous experience and standard industry practice.

All opinions and conclusions are considered accurate to a reasonable degree of engineering certainty based upon the evidence available at the time of the report. All opinions and conclusions contained herein are subject to revision based upon receipt of new or updated information. All services are provided exercising a level of care and diligence equivalent to the standard of our profession. No warranty or guarantee, either expressed or implied, is offered. All services are confidential in nature and this report will not be released to any other party without the client's consent. The use of this analysis is limited to the expressed purpose for which it was commissioned and it may not be reused, copied or disseminated for any other purpose without consent from CLS Engineering PLLC.

All services were performed, results obtained and recommendations made in accordance with generally accepted engineering principles and practices. CLS Engineering PLLC is not responsible for the conclusions, opinions or recommendations made by others based on the information supplied in this analysis.

It is not possible to have the fully detailed information necessary to perform a complete and thorough analysis of every structural sub-component of an existing structure. The structural analysis by CLS Engineering PLLC verifies the adequacy of the primary members of the structure. CLS Engineering PLLC provides a limited scope of service in that we cannot verify the adequacy of every weld, bolt, gusset, etc.

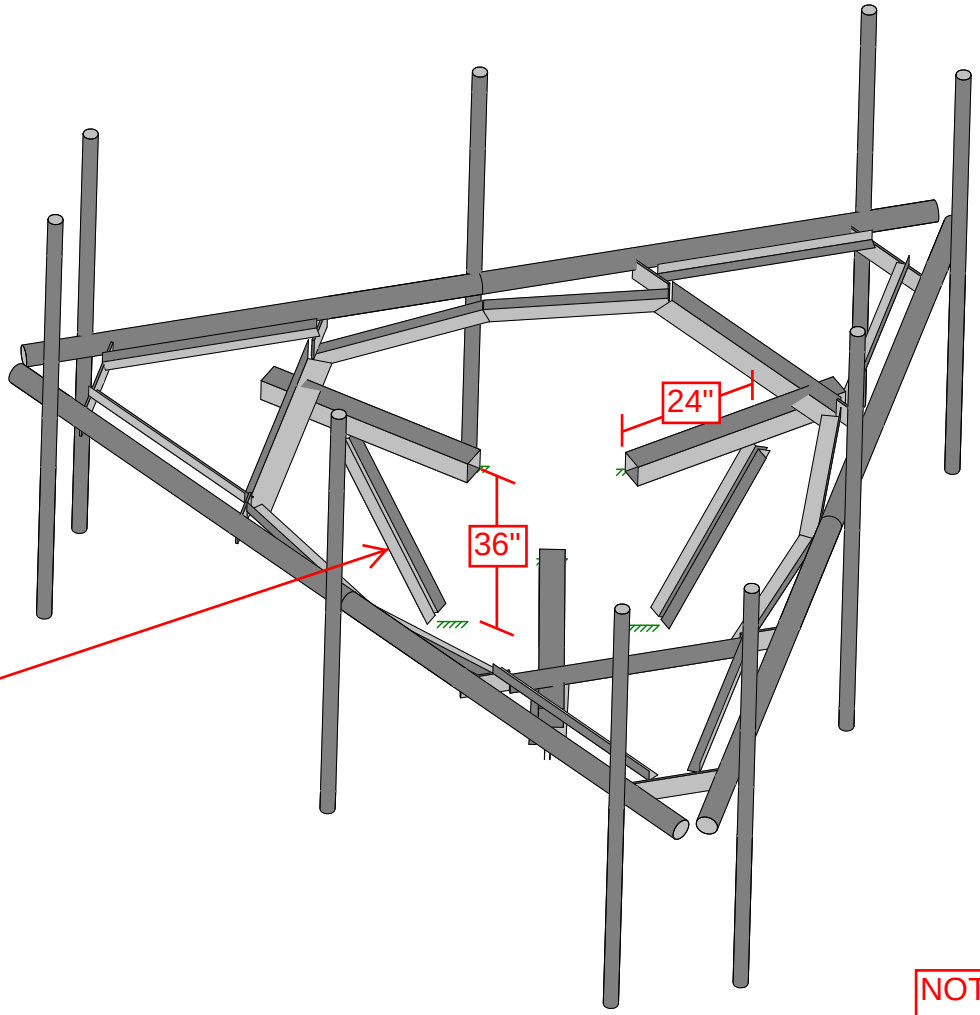


Install (1) proposed Site Pro 1 PRK-1245 platform reinforcement kit on existing platform mount as shown in the following sketches. Field-cut proposed members as required. Maintain minimum bolt edge distance.

NOTES:
*Re-secure coax after installation of proposed kit.
*Do not pinch safety climb.

Envelope Only Solution

| | | |
|---|---|---|
| CLS | | SK - 0 |
| SMR | 41124-12925565-CROMWELLSW CT | July 8, 2019 at 9:07 AM |
| 41124-12925565-01-MA-R1 | Installation Sketch - Isometric View | 41124-12625565-01-MA-R1.r3d |

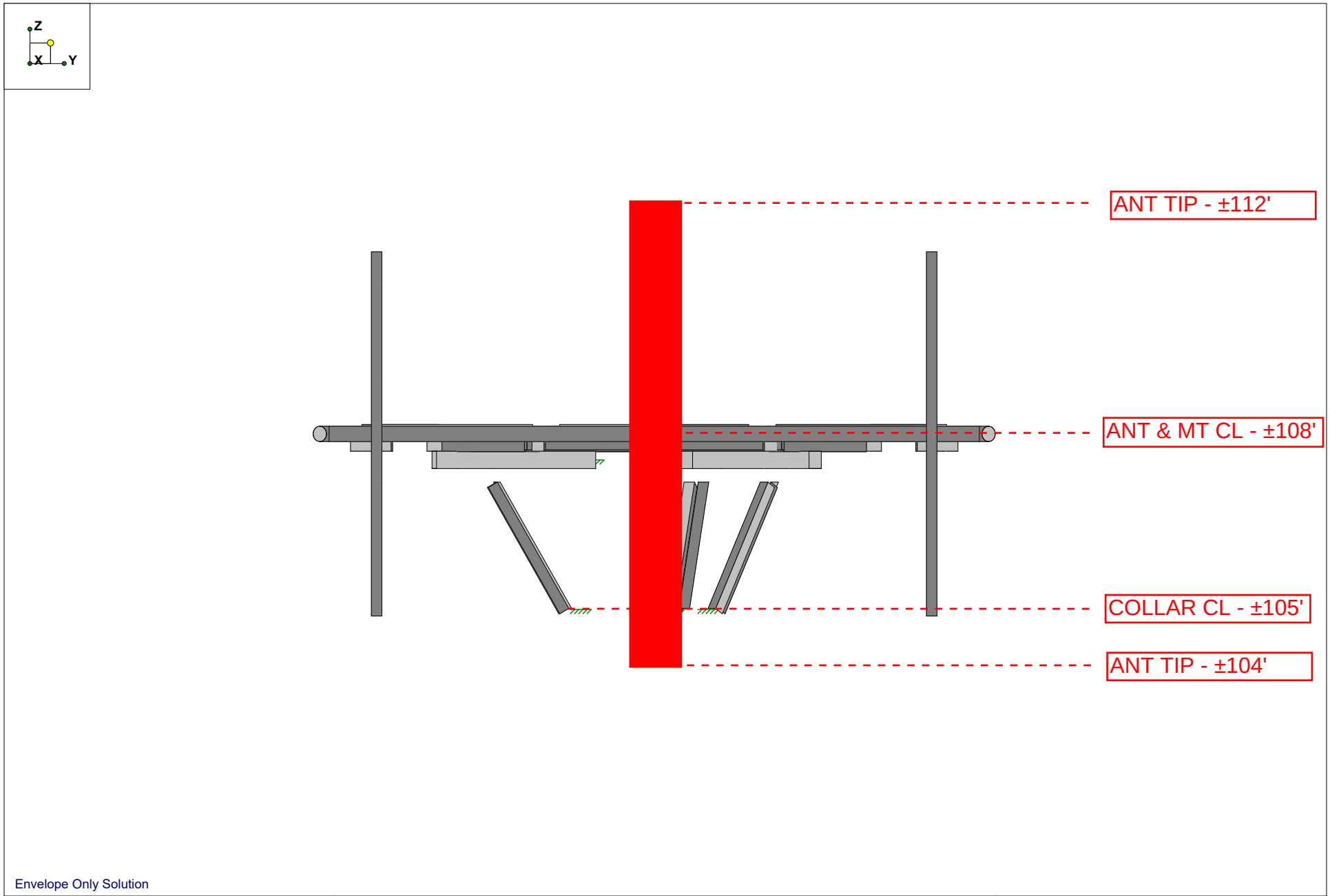


Envelope Only Solution

| | | |
|---|---|---|
| CLS | | SK - 0 |
| SMR | 41124-12925565-CROMWELLSW CT | July 8, 2019 at 9:09 AM |
| 41124-12925565-01-MA-R1 | Installation Sketch - Elevation View | 41124-12625565-01-MA-R1.r3d |

| PARTS LIST | | | | | | |
|---|---|---|---|---|---|---|
| ITEM | QTY | PART NO. | PART DESCRIPTION | LENGTH | UNIT WT. | NET WT. |
| 1 | 3 | X-LWRM | RING MOUNT WELDMENT | | 68.81 | 206.42 |
| 2 | 36 | G58LW | 5/8" HDG LOCKWASHER | | 0.03 | 0.94 |
| 3 | 30 | A58NUT | 5/8" HDG A325 HEX NUT | | 0.13 | 3.90 |
| 4 | 9 | G58R-24 | 5/8" x 24" THREADED ROD (HDG.) | | 0.55 | 4.94 |
| 4 | 9 | G58R-48 | 5/8" x 48" THREADED ROD (HDG.) | | 0.55 | 4.94 |
| 5 | 12 | A58234 | 5/8" x 2-3/4" HDG A325 HEX BOLT | 2 3/4 in | 0.36 | 4.27 |
| 6 | 12 | A58FW | 5/8" HDG A325 FLATWASHER | | 0.03 | 0.41 |
| 7 | 24 | G12FW | 1/2" HDG USS FLATWASHER | | 0.03 | 0.82 |
| 8 | 12 | G12LW | 1/2" HDG LOCKWASHER | | 0.01 | 0.17 |
| 9 | 12 | G12NUT | 1/2" HDG HEAVY 2H HEX NUT | | 0.07 | 0.86 |
| 10 | 3 | SCX4 | CROSSOVER PLATE | 8 1/2 in | 6.02 | 18.06 |
| 11 | 6 | G58NUT | 5/8" HDG HEAVY 2H HEX NUT | | 0.13 | 0.78 |
| 12 | 6 | X-253993 | PLATFORM REINFORCEMENT KIT ANGLE | 52 25/32 in | 14.33 | 85.99 |
| 13 | 6 | X-253992 | T-BRACKET FOR REINFORCEMENT KIT | | 13.55 | 81.27 |
| 14 | 6 | G5802 | 5/8" x 2" HDG HEX BOLT GR5 | | 0.27 | 1.62 |
| 15 | 12 | G12065 | 1/2" x 6-1/2" HDG HEX BOLT GR5 FULL THREAD | 6 1/2 in | 0.41 | 4.91 |
| | | | | | TOTAL WT. # | 464.91 |

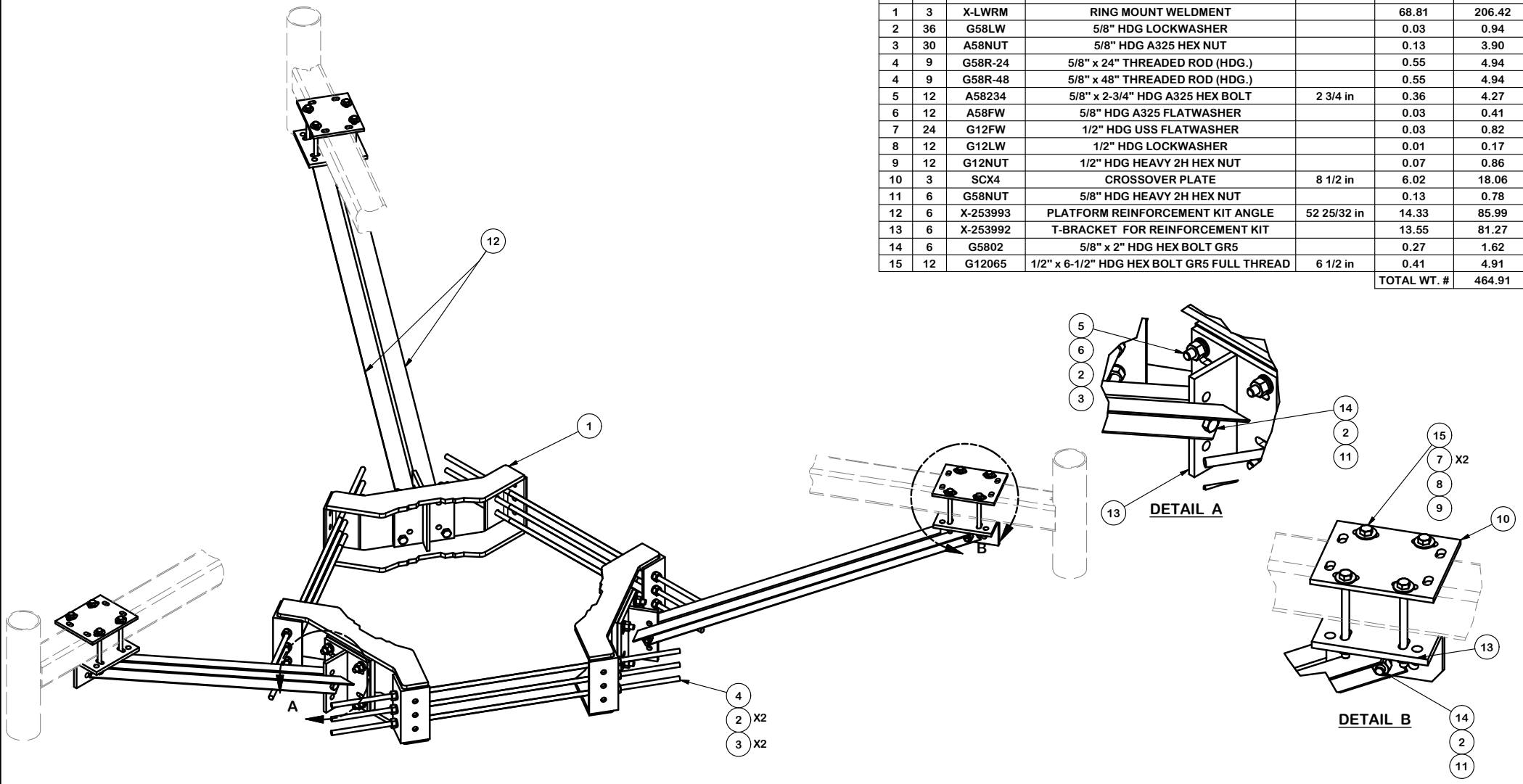


## TOLERANCE NOTES

**TOLERANCES ON DIMENSIONS, UNLESS OTHERWISE NOTED ARE:**
**SAWED, SHEARED AND GAS CUT EDGES *(± 0.030")***
**DRILLED AND GAS CUT HOLES *(± 0.030")* - NO CONING OF HOLES**
**LASER CUT EDGES AND HOLES *(± 0.010")* - NO CONING OF HOLES**
**BENDS ARE ± 1/2 DEGREE**
**ALL OTHER MACHINING *(± 0.030")***
**ALL OTHER ASSEMBLY *(± 0.060")***


**PROPRIETARY NOTE:**
THE DATA AND TECHNIQUES CONTAINED IN THIS DRAWING ARE PROPRIETARY INFORMATION OF VALMONT INDUSTRIES AND CONSIDERED A TRADE SECRET. ANY USE OR DISCLOSURE WITHOUT THE CONSENT OF VALMONT INDUSTRIES IS STRICTLY PROHIBITED.


DESCRIPTION
PLATFORM RENIFORCEMENT
ON A 12" TO 45" POLE
4' 6" ANGLE


SITE PRO 1
A valmont COMPANY
Engineering Support Team: 1-888-753-7446
Locations: New York, NY; Atlanta, GA; Los Angeles, CA; Plymouth, IN; Salem, OR; Dallas, TX


| CPD NO. | DRAWN BY | ENG. APPROVAL | PART NO. |
|---|---|---|---|
| 4488 | CEK 4/10/2014 | | PRK-1245 |

| CLASS | SUB | DRAWING USAGE | CHECKED BY | DWG. NO. |
|---|---|---|---|---|
| 81 | 01 | CUSTOMER | BMC 4/10/2014 | PRK-1245 |

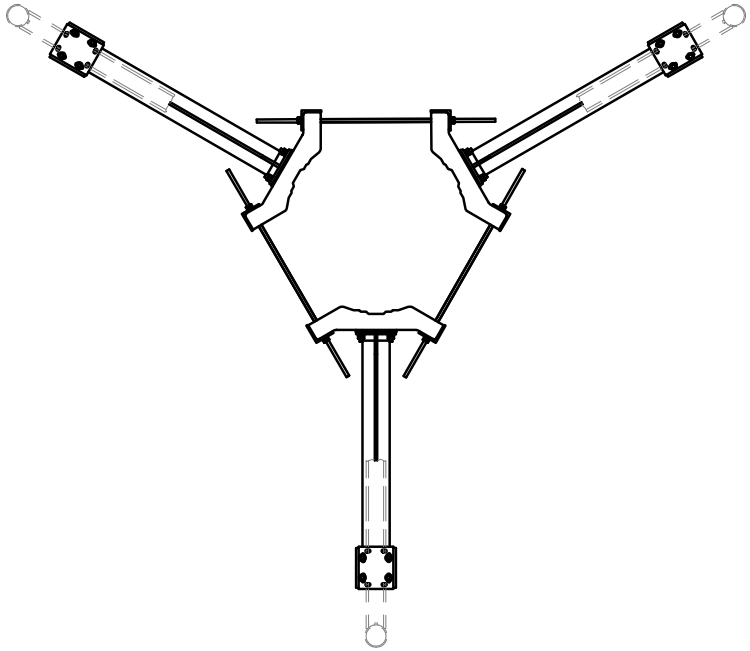

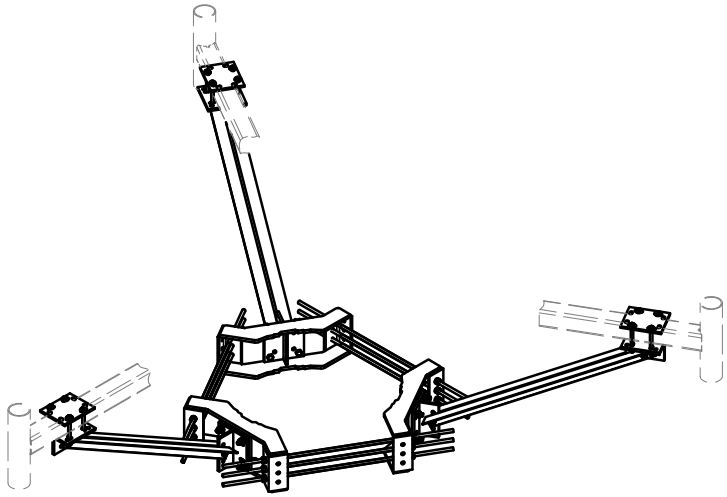

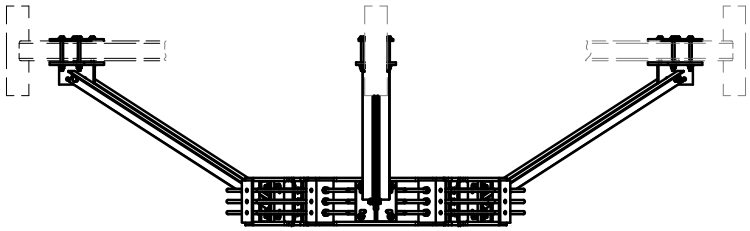

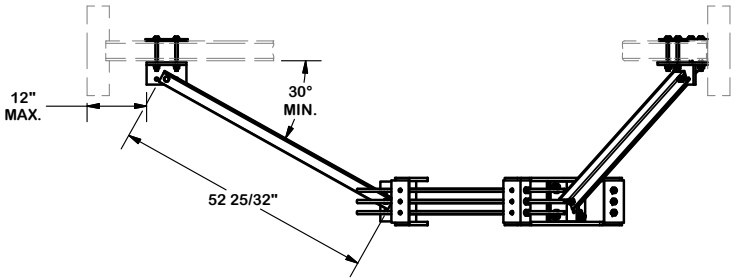


## TOLERANCE NOTES

**TOLERANCES ON DIMENSIONS, UNLESS OTHERWISE NOTED ARE:**
**SAWED, SHEARED AND GAS CUT EDGES *(± 0.030")***
**DRILLED AND GAS CUT HOLES *(± 0.030")* - NO CONING OF HOLES**
**LASER CUT EDGES AND HOLES *(± 0.010")* - NO CONING OF HOLES**
**BENDS ARE ± 1/2 DEGREE**
**ALL OTHER MACHINING *(± 0.030")***
**ALL OTHER ASSEMBLY *(± 0.060")***

**PROPRIETARY NOTE:**
THE DATA AND TECHNIQUES CONTAINED IN THIS DRAWING ARE PROPRIETARY INFORMATION OF VALMONT INDUSTRIES AND CONSIDERED A TRADE SECRET. ANY USE OR DISCLOSURE WITHOUT THE CONSENT OF VALMONT INDUSTRIES IS STRICTLY PROHIBITED.

DESCRIPTION
PLATFORM RENIFORCEMENT
ON A 12" TO 45" POLE
4' 6" ANGLE

SITE PRO 1
A valmont COMPANY

Engineering Support Team:
1-888-753-7446

Locations:
New York, NY
Atlanta, GA
Los Angeles, CA
Plymouth, IN
Salem, OR
Dallas, TX

| CPD NO. | DRAWN BY | ENG. APPROVAL | PART NO. |
|---|---|---|---|
| 4488 | CEK 4/10/2014 | | PRK-1245 |

| CLASS | SUB | DRAWING USAGE | CHECKED BY | DWG. NO. |
|---|---|---|---|---|
| 81 | 01 | CUSTOMER | BMC 4/10/2014 | PRK-1245 |

## Wind & Ice Loading

| | | | |
|---|---|---|---|
| Nominal Mount Elevation (AGL), $z_{mount}$ | 108 ft | $K_a$ | 0.90 |
| Nominal Rad Elevation (AGL), $z_{rad}$ | 108 ft | $K_d$ | 0.95 |
| Elevation AMSL (ft) | - | $K_e$ | - |
| TIA Standard | G | $K_z$ | 1.01 |
| Basic Wind Speed, $V_{ult}$ (bare) | 125 mph | $K_{zt}$ | 1.00 |
| Basic Wind Speed, V (ice) | 50 mph | $K_s$ | - |
| Design Ice Thickness, $t_i$ | 1 in | $t_{iz}$ | 2.25 in |
| Exposure Category | B | $G_h$ | 1.00 |
| Risk Category | II | $q_z$ (bare) | 38.4 psf |
| Seismic Response Coeff., $C_s$ | - | $q_z$ (ice) | 6.1 psf |

## Live Loading

| | |
|---|---|
| At Mount Pipes, $L_M$ | 500 lb |
| Joint Labels Considered | N96 |
| | N68 |
| | N92 |
| | |
| | |

## Member Distributed Loading

| Section Set Label | Shape Label | $F_A$ (lb/ft) Bare | $F_A$ (lb/ft) Ice | Ice Wt. (lb/ft) |
|---|---|---|---|---|
| Offset Arm | HSS4X4X4 | 23.03 | 2.77 | 20.21 |
| Face Horiz. Pipe | PIPE_3.0 | 12.09 | 4.42 | 15.82 |
| Circular PL Angle 2 | L3X2X.25 | 17.27 | 4.48 | 16.11 |
| Offset Side PL | PL4x.375 | 23.03 | 4.71 | 13.86 |
| Offset Side Angle | 4x4x0.25 | 23.03 | 2.77 | 19.78 |
| Offset End Plate | PL4x.375 | 23.03 | 4.71 | 13.86 |
| Mount Pipe | PIPE_2.0 | 8.21 | 3.80 | 12.73 |
| Grating Angle | L2x2x3 | 11.52 | 4.05 | 13.98 |
| MOD PRK | L2.5x2.5x3 | 14.40 | 2.66 | 14.53 |

## Appurtenances

| Appurtenance Model | Status | Azimuth Offset (°, ↻) | Rad Elev. Override (ft) | Swap Width & Depth | Area Factor Front | Area Factor Side | Qty. per Azimuth 0° | Qty. per Azimuth 120° | Qty. per Azimuth 240° | Total Qty. Override | 0° Joints 1 | 0° Joints 2 | 120° Joints 1 | 120° Joints 2 | 240° Joints 1 | 240° Joints 2 | Height (in) | Width (in) | Depth (in) | Weight (Bare) (lb) | Shape | Weight of Ice (lb) | $EPA_A$ (Bare) (ft²) N | $EPA_A$ (Bare) (ft²) T | $EPA_A$ (Ice) (ft²) N | $EPA_A$ (Ice) (ft²) T | $F_A$ (Bare) (lb) N | $F_A$ (Bare) (lb) T | $F_A$ (Ice) (lb) N | $F_A$ (Ice) (lb) T |
|---|---|---|---|---|---|---|---|---|---|---|---|---|---|---|---|---|---|---|---|---|---|---|---|---|---|---|---|---|---|---|
| APXVAARR24_43-U-NA20 | | | | ☐ | | | 1 | 1 | 1 | 3 | A1 | A2 | B1 | B2 | G1 | G2 | 0 | 0 | 0 | 153.3 | Generic | 507.05 | 14.67 | 5.32 | 18.09 | 8.34 | 506.83 | 183.80 | 100.01 | 46.09 |
| AIR 32 B2A/B66AA | | | | ☐ | | | 1 | 1 | 1 | 3 | A3 | A4 | B3 | B4 | G3 | G4 | 56.6 | 12.9 | 8.7 | 132.2 | Flat | 206.37 | 6.51 | 4.71 | 9.19 | 7.25 | 224.91 | 162.80 | 50.82 | 40.09 |
| KRY 112 144/1 | | | | ☐ | 0.25 | | 1 | 1 | 1 | 3 | AT1 | | BT1 | | GT1 | | 7 | 6 | 3 | 11 | Flat | 14.30 | 0.09 | 0.18 | 0.25 | 0.72 | 3.02 | 6.05 | 1.39 | 3.98 |
| RADIO 4449 B12/B71 | | | | ☐ | 0.75 | | 1 | 1 | 1 | 3 | AR1 | | BR1 | | GR1 | | 15 | 13.2 | 10.4 | 75 | Flat | 77.48 | 1.24 | 1.30 | 2.16 | 2.42 | 42.75 | 44.91 | 11.93 | 13.39 |

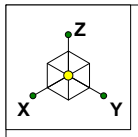


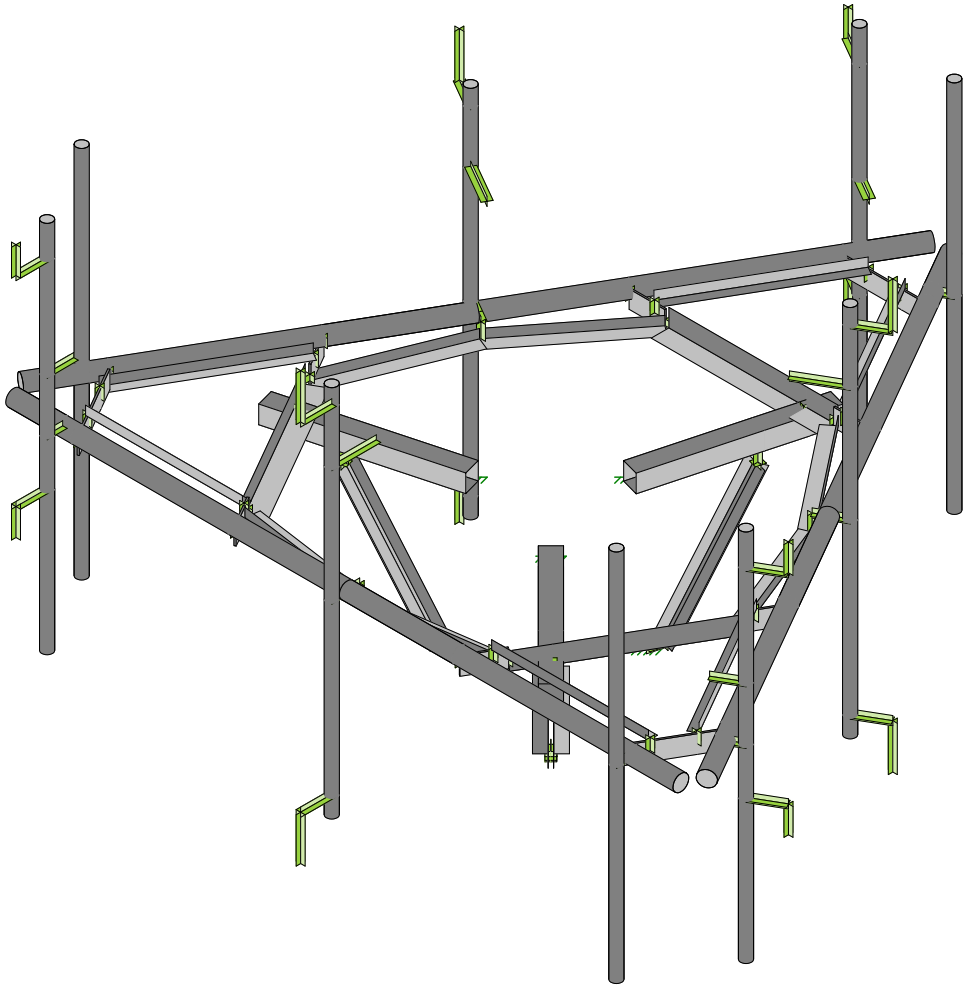

Envelope Only Solution

| | | |
|---|---|---|
| CLS | | SK - 1 |
| SMR | 41124-12925565-CROMWELLSW CT | July 8, 2019 at 9:01 AM |
| 41124-12925565-01-MA-R1 | Rendered | 41124-12625565-01-MA-R1.r3d |

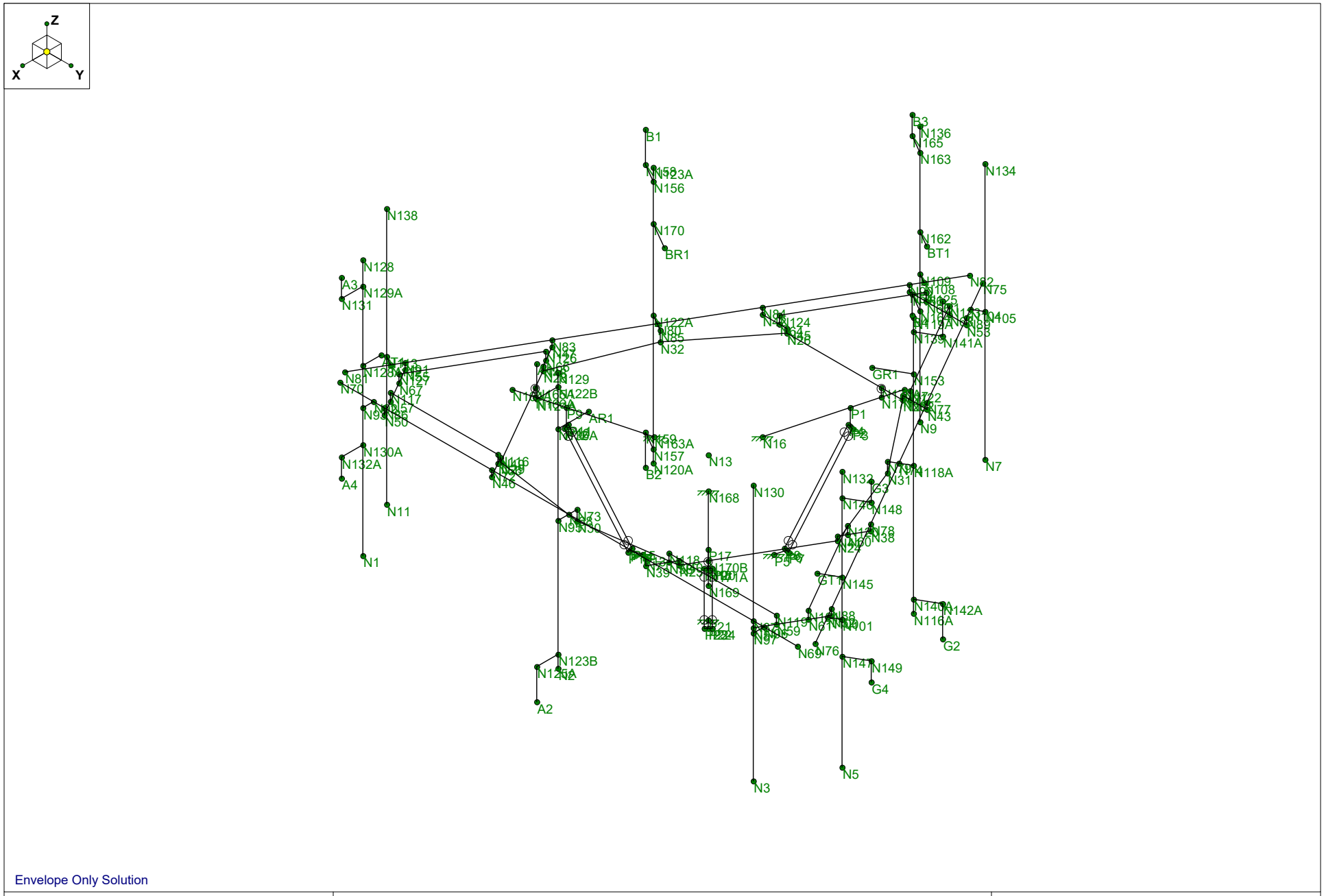


Envelope Only Solution

| | | |
|---|---|---|
| CLS | 41124-12925565-CROMWELLSW CT | SK - 2 |
| SMR | | July 8, 2019 at 9:04 AM |
| 41124-12925565-01-MA-R1 | Joint Labels | 41124-12625565-01-MA-R1.r3d |

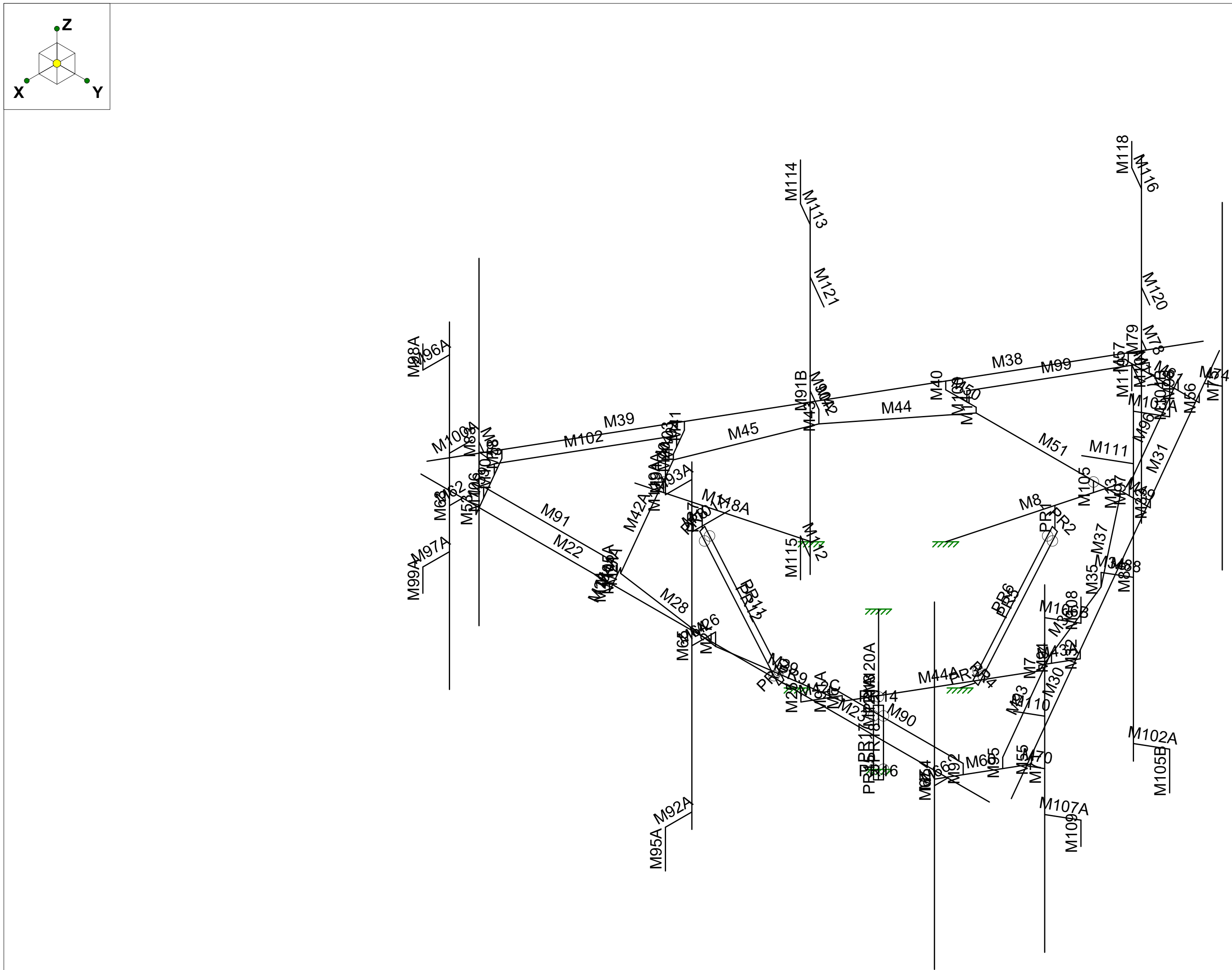


Envelope Only Solution

| | | |
|---|---|---|
| CLS | 41124-12925565-CROMWELLSW CT<br>Member Labels | SK - 3 |
| SMR | | July 8, 2019 at 9:04 AM |
| 41124-12925565-01-MA-R1 | | 41124-12625565-01-MA-R1.r3d |

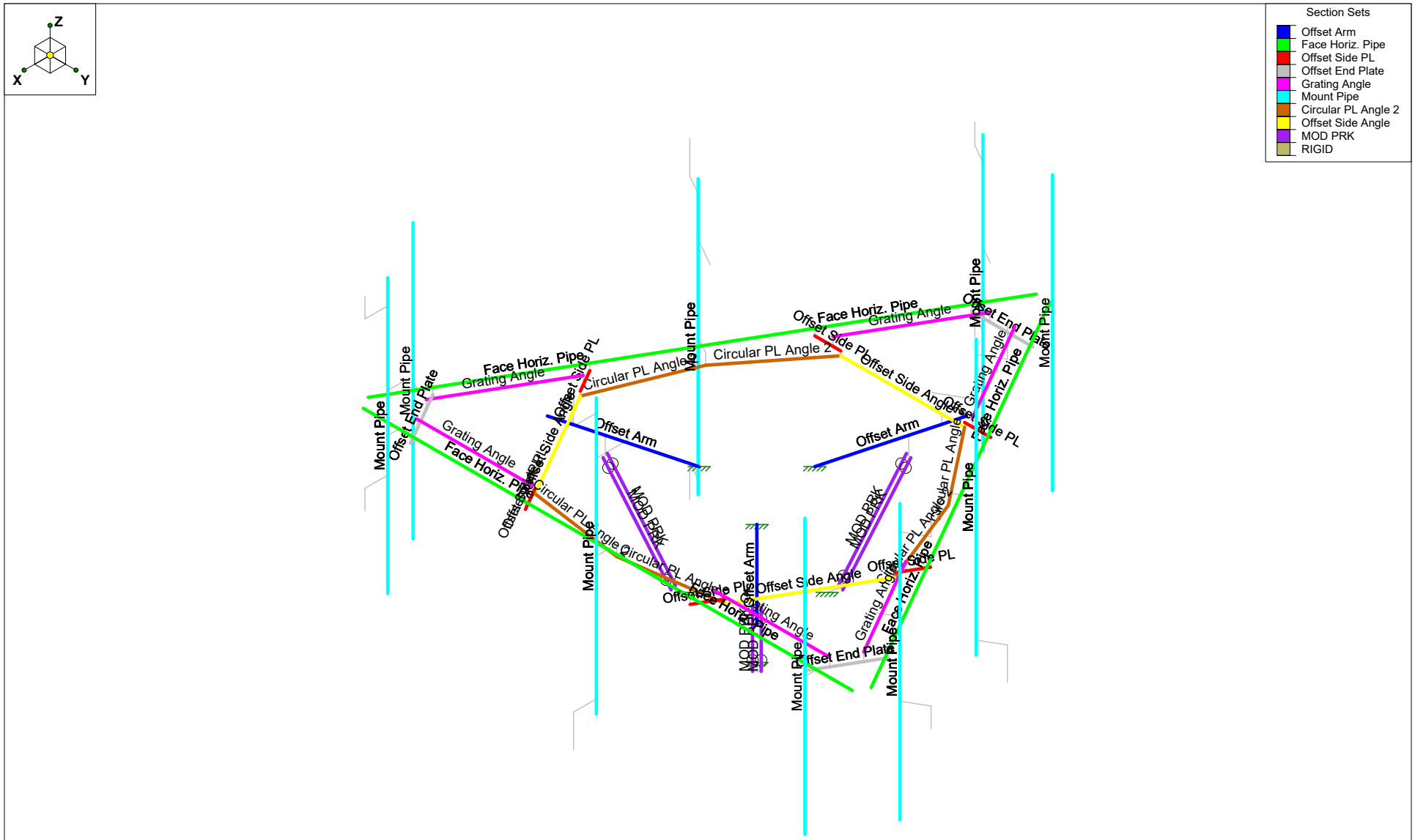


Envelope Only Solution

| | | |
|---|---|---|
| CLS | 41124-12925565-CROMWELLSW CT | SK - 4 |
| SMR | | July 8, 2019 at 9:04 AM |
| 41124-12925565-01-MA-R1 | Section Sets | 41124-12625565-01-MA-R1.r3d |

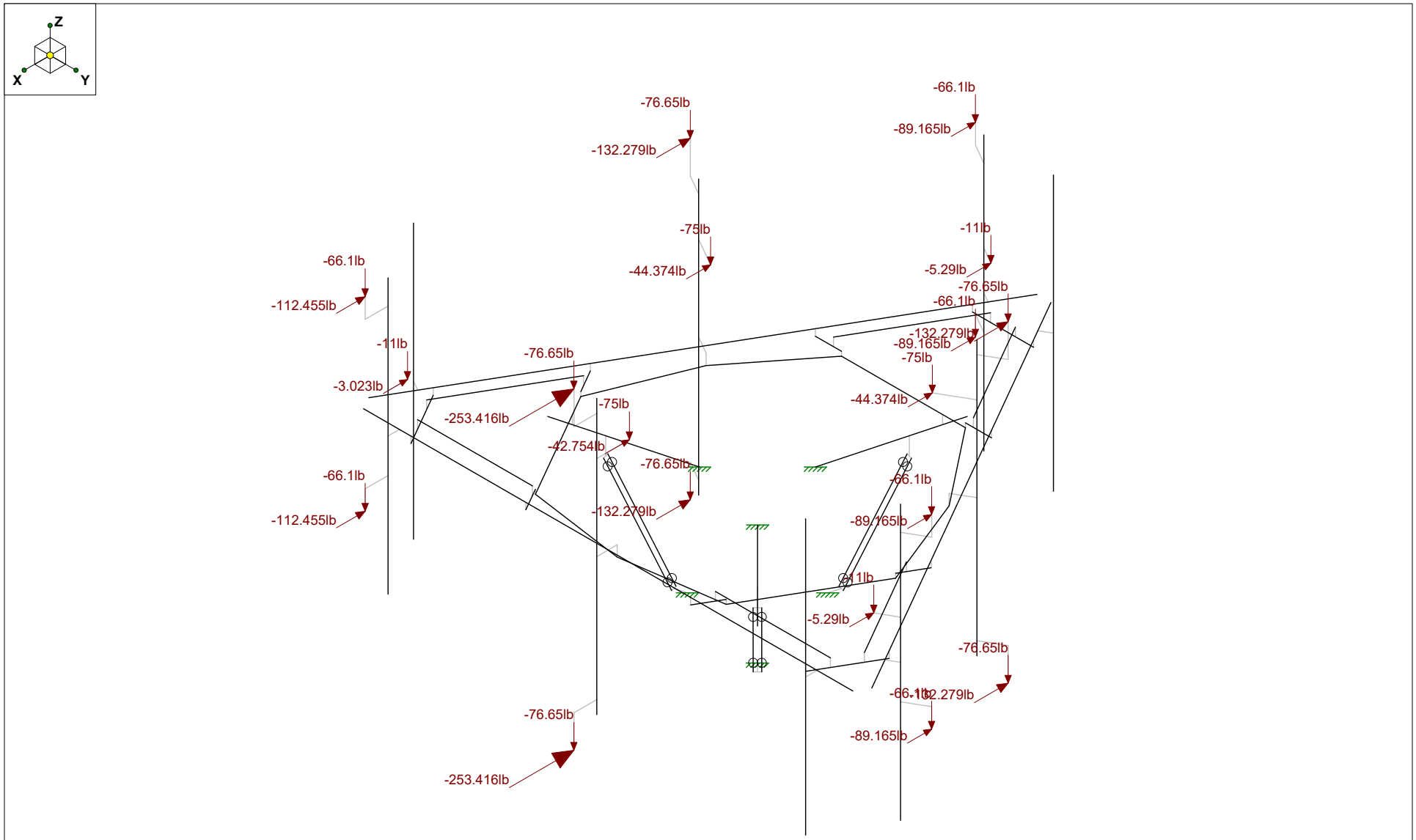


Loads: LC 1, DISPLAY (1.0D + 1.0W_0°)
Envelope Only Solution

| | | |
|---|---|---|
| CLS | | SK - 5 |
| SMR | 41124-12925565-CROMWELLSW CT | July 8, 2019 at 9:05 AM |
| 41124-12925565-01-MA-R1 | Joint Loads - Dead and Normal Wind | 41124-12625565-01-MA-R1.r3d |

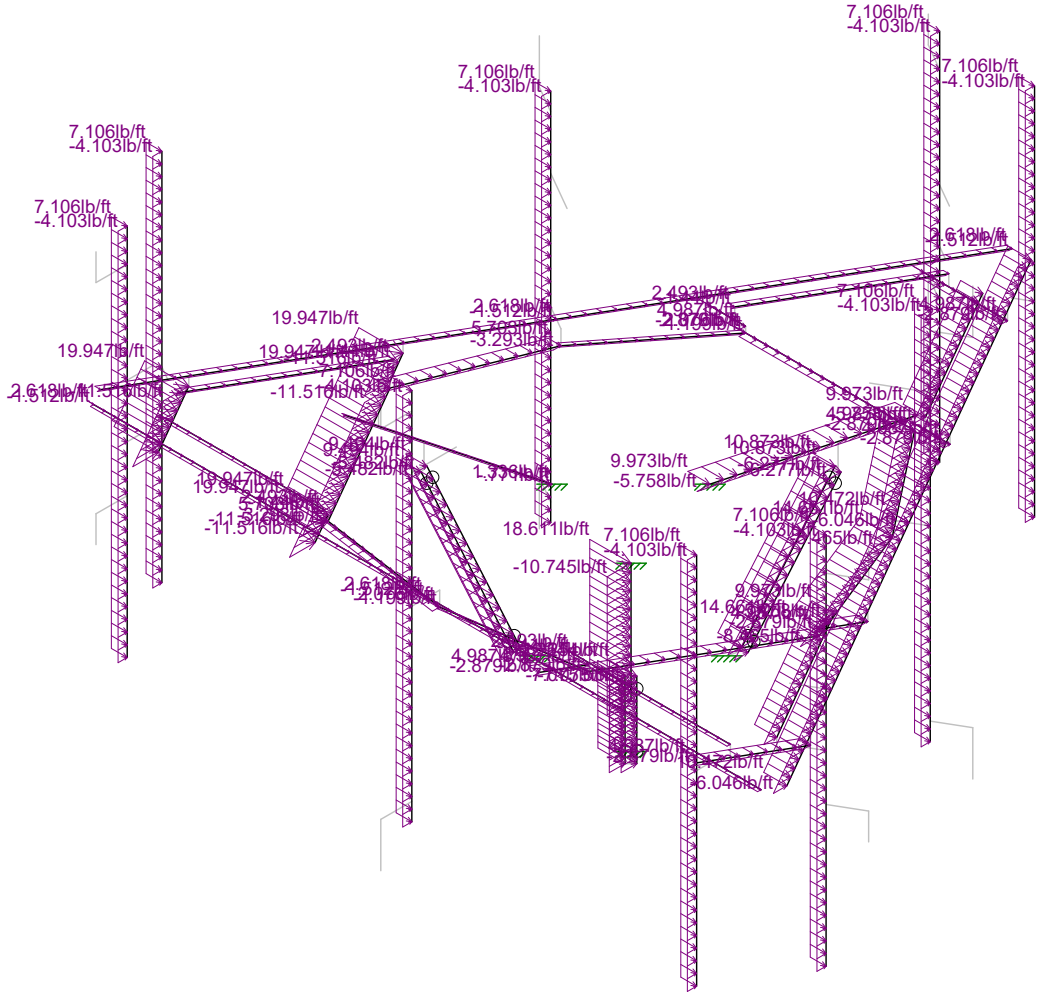


Loads: BLC 7, Structure Wind 60°
Envelope Only Solution

| | | |
|---|---|---|
| CLS | 41124-12925565-CROMWELLSW CT | SK - 6 |
| SMR | | July 8, 2019 at 9:05 AM |
| 41124-12925565-01-MA-R1 | Distributed Load - Normal Wind | 41124-12625565-01-MA-R1.r3d |

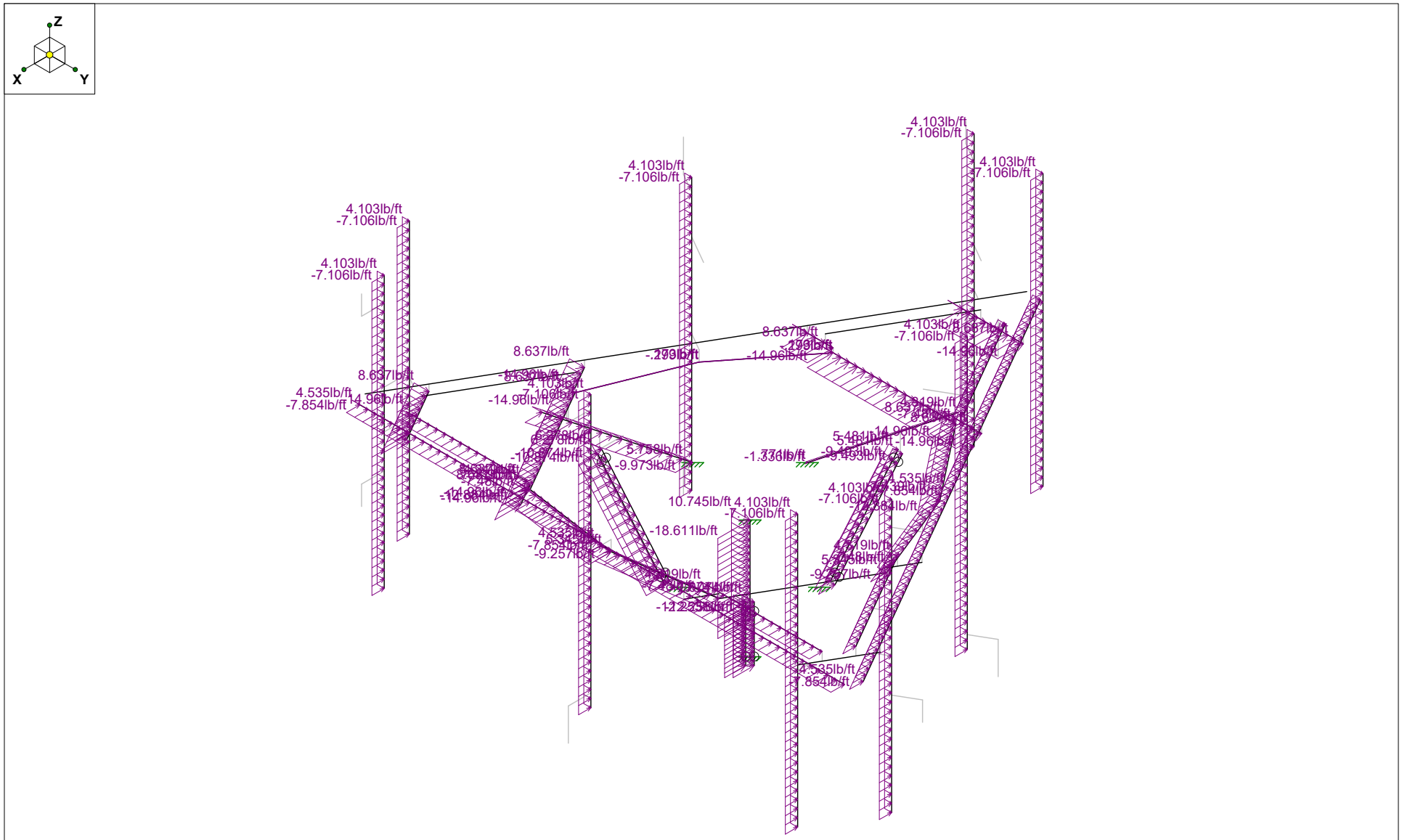


Loads: BLC 5, Structure Wind 30°
Envelope Only Solution

| | | |
|---|---|---|
| CLS | 41124-12925565-CROMWELLSW CT | SK - 7 |
| SMR | | July 8, 2019 at 9:05 AM |
| 41124-12925565-01-MA-R1 | Ice Dead Loads | 41124-12625565-01-MA-R1.r3d |

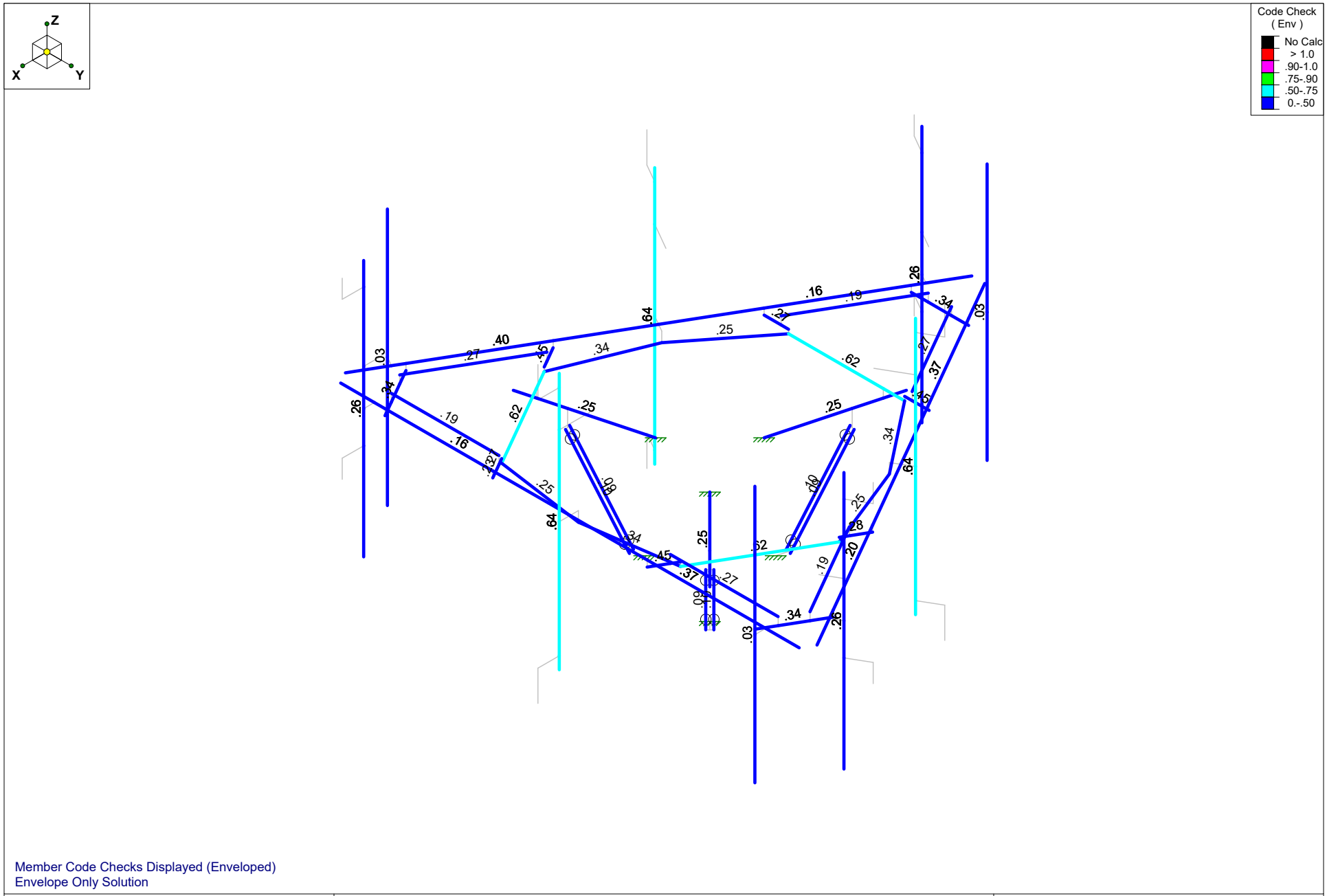


Member Code Checks Displayed (Enveloped)
Envelope Only Solution

| | | |
|---|---|---|
| CLS | | SK - 8 |
| SMR | 41124-12925565-CROMWELLSW CT | July 8, 2019 at 9:05 AM |
| 41124-12925565-01-MA-R1 | Envelope Member Unity Check Results - Bending | 41124-12625565-01-MA-R1.r3d |

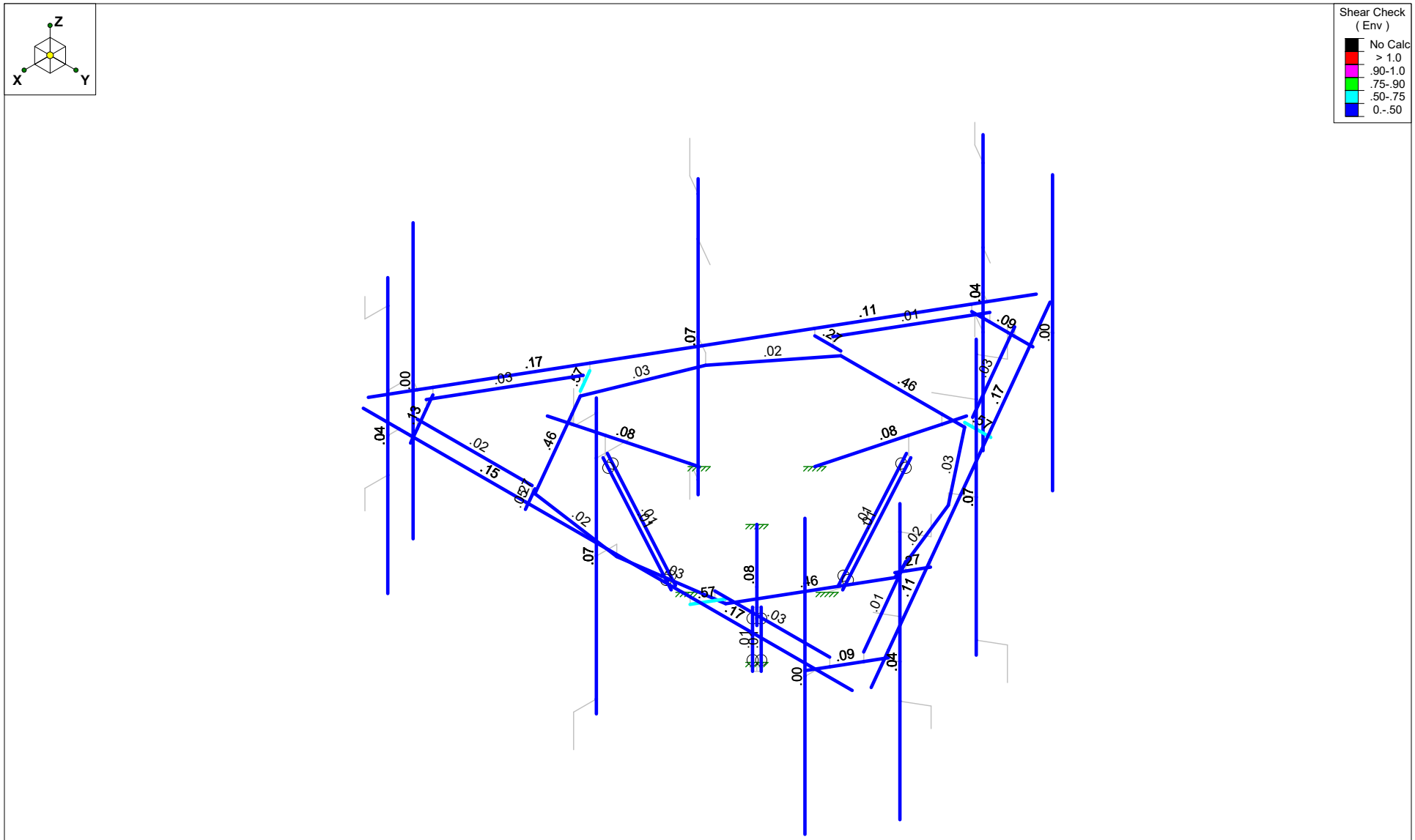


Member Shear Checks Displayed (Enveloped)
Envelope Only Solution

| | | |
|---|---|---|
| CLS | | SK - 9 |
| SMR | 41124-12925565-CROMWELLSW CT | July 8, 2019 at 9:06 AM |
| 41124-12925565-01-MA-R1 | Envelope Member Check Results - Shear | 41124-12625565-01-MA-R1.r3d |

## Basic Load Cases

| | BLC Description | Category | X Gravity | Y Gravity | Z Gravity | Joint | Point | Distributed | Area(Me... | Surface(... |
|---|---|---|---|---|---|---|---|---|---|---|
| 1 | Dead | DL | | | -1 | 18 | | | | |
| 2 | Ice Dead | RL | | | | 18 | | 49 | | |
| 4 | Structure Wind 0Á | None | | | | | | 49 | | |
| 5 | Structure Wind 30Á | None | | | | | | 82 | | |
| 6 | Structure Wind 45Á | None | | | | | | 98 | | |
| 7 | Structure Wind 60Á | None | | | | | | 98 | | |
| 8 | Structure Wind 90Á | None | | | | | | 41 | | |
| 9 | Structure Wind 120Á | None | | | | | | 98 | | |
| 10 | Structure Wind 135Á | None | | | | | | 96 | | |
| 11 | Structure Wind 150Á | None | | | | | | 80 | | |
| 12 | Structure Wind w/ Ice 0Á | None | | | | | | 49 | | |
| 13 | Structure Wind w/ Ice 30Á | None | | | | | | 82 | | |
| 14 | Structure Wind w/ Ice 45Á | None | | | | | | 98 | | |
| 15 | Structure Wind w/ Ice 60Á | None | | | | | | 98 | | |
| 16 | Structure Wind w/ Ice 90Á | None | | | | | | 41 | | |
| 17 | Structure Wind w/ Ice 120Á | None | | | | | | 98 | | |
| 18 | Structure Wind w/ Ice 135Á | None | | | | | | 96 | | |
| 19 | Structure Wind w/ Ice 150Á | None | | | | | | 80 | | |
| 20 | Antenna Wind 0Á | None | | | | 18 | | | | |
| 21 | Antenna Wind 30Á | None | | | | 36 | | | | |
| 22 | Antenna Wind 45Á | None | | | | 36 | | | | |
| 23 | Antenna Wind 60Á | None | | | | 36 | | | | |
| 24 | Antenna Wind 90Á | None | | | | 18 | | | | |
| 25 | Antenna Wind 120Á | None | | | | 36 | | | | |
| 26 | Antenna Wind 135Á | None | | | | 36 | | | | |
| 27 | Antenna Wind 150Á | None | | | | 36 | | | | |
| 28 | Antenna Wind w/ Ice 0Á | None | | | | 18 | | | | |
| 29 | Antenna Wind w/ Ice 30Á | None | | | | 36 | | | | |
| 30 | Antenna Wind w/ Ice 45Á | None | | | | 36 | | | | |
| 31 | Antenna Wind w/ Ice 60Á | None | | | | 36 | | | | |
| 32 | Antenna Wind w/ Ice 90Á | None | | | | 18 | | | | |
| 33 | Antenna Wind w/ Ice 120Á | None | | | | 36 | | | | |
| 34 | Antenna Wind w/ Ice 135Á | None | | | | 36 | | | | |
| 35 | Antenna Wind w/ Ice 150Á | None | | | | 36 | | | | |
| 39 | Maintenance Live 500 (1) | OL1 | | | | 1 | | | | |
| 40 | Maintenance Live 500 (2) | OL2 | | | | 1 | | | | |
| 41 | Maintenance Live 500 (3) | OL3 | | | | 1 | | | | |

## Load Combinations

| | Description | Solve | PDe.. | SRSS | BLC | Fac... | BLC | Fac... | BLC | Fac... | BLC | Fac... | BLC | Fac... | BLC | Fac... | BLC | Fac... | BLC | Fac... | BLC | Fac... | BLC | Fac... |
|---|---|---|---|---|---|---|---|---|---|---|---|---|---|---|---|---|---|---|---|---|---|---|---|---|
| 1 | DISPLAY (1.0D + ... | Yes | Y | | DL | 1 | 20 | 1 | | | | | | | | | | | | | | | | |
| 2 | 1.4D | Yes | Y | | DL | 1.4 | | | | | | | | | | | | | | | | | | |
| 3 | 1.2D + 1.0W_0Á | Yes | Y | | DL | 1.2 | 4 | 1 | 20 | 1 | | | | | | | | | | | | | | |
| 4 | 1.2D + 1.0W_30Á | Yes | Y | | DL | 1.2 | 5 | 1 | 21 | 1 | | | | | | | | | | | | | | |
| 5 | 1.2D + 1.0W_45Á | Yes | Y | | DL | 1.2 | 6 | 1 | 22 | 1 | | | | | | | | | | | | | | |
| 6 | 1.2D + 1.0W_60Á | Yes | Y | | DL | 1.2 | 7 | 1 | 23 | 1 | | | | | | | | | | | | | | |
| 7 | 1.2D + 1.0W_90Á | Yes | Y | | DL | 1.2 | 8 | 1 | 24 | 1 | | | | | | | | | | | | | | |
| 8 | 1.2D + 1.0W_120Á | Yes | Y | | DL | 1.2 | 9 | 1 | 25 | 1 | | | | | | | | | | | | | | |
| 9 | 1.2D + 1.0W_135Á | Yes | Y | | DL | 1.2 | 10 | 1 | 26 | 1 | | | | | | | | | | | | | | |

## Load Combinations (Continued)

| | Description | Solve | PDe.. | SRSS | BLC | Fac.. | BLC | Fac.. | BLC | Fac.. | BLC | Fac.. | BLC | Fac.. | BLC | Fac.. | BLC | Fac.. | BLC | Fac.. | BLC | Fac.. | BLC | Fac... |
|---|---|---|---|---|---|---|---|---|---|---|---|---|---|---|---|---|---|---|---|---|---|---|---|---|
| 10 | 1.2D + 1.0W_150Á | Yes | Y | | DL | 1.2 | 11 | 1 | 27 | 1 | | | | | | | | | | | | | | |
| 11 | 1.2D + 1.0W_180Á | Yes | Y | | DL | 1.2 | 4 | -1 | 20 | -1 | | | | | | | | | | | | | | |
| 12 | 1.2D + 1.0W_210Á | Yes | Y | | DL | 1.2 | 5 | -1 | 21 | -1 | | | | | | | | | | | | | | |
| 13 | 1.2D + 1.0W_225Á | Yes | Y | | DL | 1.2 | 6 | -1 | 22 | -1 | | | | | | | | | | | | | | |
| 14 | 1.2D + 1.0W_240Á | Yes | Y | | DL | 1.2 | 7 | -1 | 23 | -1 | | | | | | | | | | | | | | |
| 15 | 1.2D + 1.0W_270Á | Yes | Y | | DL | 1.2 | 8 | -1 | 24 | -1 | | | | | | | | | | | | | | |
| 16 | 1.2D + 1.0W_300Á | Yes | Y | | DL | 1.2 | 9 | -1 | 25 | -1 | | | | | | | | | | | | | | |
| 17 | 1.2D + 1.0W_315Á | Yes | Y | | DL | 1.2 | 10 | -1 | 26 | -1 | | | | | | | | | | | | | | |
| 18 | 1.2D + 1.0W_330Á | Yes | Y | | DL | 1.2 | 11 | -1 | 27 | -1 | | | | | | | | | | | | | | |
| 19 | 1.2D + 1.0Di + 1.0... | Yes | Y | | DL | 1.2 | 12 | 1 | 28 | 1 | RL | 1 | | | | | | | | | | | | |
| 20 | 1.2D + 1.0Di + 1.0... | Yes | Y | | DL | 1.2 | 13 | 1 | 29 | 1 | RL | 1 | | | | | | | | | | | | |
| 21 | 1.2D + 1.0Di + 1.0... | Yes | Y | | DL | 1.2 | 14 | 1 | 30 | 1 | RL | 1 | | | | | | | | | | | | |
| 22 | 1.2D + 1.0Di + 1.0... | Yes | Y | | DL | 1.2 | 15 | 1 | 31 | 1 | RL | 1 | | | | | | | | | | | | |
| 23 | 1.2D + 1.0Di + 1.0... | Yes | Y | | DL | 1.2 | 16 | 1 | 32 | 1 | RL | 1 | | | | | | | | | | | | |
| 24 | 1.2D + 1.0Di + 1.0... | Yes | Y | | DL | 1.2 | 17 | 1 | 33 | 1 | RL | 1 | | | | | | | | | | | | |
| 25 | 1.2D + 1.0Di + 1.0... | Yes | Y | | DL | 1.2 | 18 | 1 | 34 | 1 | RL | 1 | | | | | | | | | | | | |
| 26 | 1.2D + 1.0Di + 1.0... | Yes | Y | | DL | 1.2 | 19 | 1 | 35 | 1 | RL | 1 | | | | | | | | | | | | |
| 27 | 1.2D + 1.0Di + 1.0... | Yes | Y | | DL | 1.2 | 12 | -1 | 28 | -1 | RL | 1 | | | | | | | | | | | | |
| 28 | 1.2D + 1.0Di + 1.0... | Yes | Y | | DL | 1.2 | 13 | -1 | 29 | -1 | RL | 1 | | | | | | | | | | | | |
| 29 | 1.2D + 1.0Di + 1.0... | Yes | Y | | DL | 1.2 | 14 | -1 | 30 | -1 | RL | 1 | | | | | | | | | | | | |
| 30 | 1.2D + 1.0Di + 1.0... | Yes | Y | | DL | 1.2 | 15 | -1 | 31 | -1 | RL | 1 | | | | | | | | | | | | |
| 31 | 1.2D + 1.0Di + 1.0... | Yes | Y | | DL | 1.2 | 16 | -1 | 32 | -1 | RL | 1 | | | | | | | | | | | | |
| 32 | 1.2D + 1.0Di + 1.0... | Yes | Y | | DL | 1.2 | 17 | -1 | 33 | -1 | RL | 1 | | | | | | | | | | | | |
| 33 | 1.2D + 1.0Di + 1.0... | Yes | Y | | DL | 1.2 | 18 | -1 | 34 | -1 | RL | 1 | | | | | | | | | | | | |
| 34 | 1.2D + 1.0Di + 1.0... | Yes | Y | | DL | 1.2 | 19 | -1 | 35 | -1 | RL | 1 | | | | | | | | | | | | |
| 35 | 1.2D + 1.5Lm_1 +... | Yes | Y | | DL | 1.2 | 4 | .061 | 20 | .061 | OL1 | 1.5 | | | | | | | | | | | | |
| 36 | 1.2D + 1.5Lm_1 +... | Yes | Y | | DL | 1.2 | 5 | .061 | 21 | .061 | OL1 | 1.5 | | | | | | | | | | | | |
| 37 | 1.2D + 1.5Lm_1 +... | Yes | Y | | DL | 1.2 | 6 | .061 | 22 | .061 | OL1 | 1.5 | | | | | | | | | | | | |
| 38 | 1.2D + 1.5Lm_1 +... | Yes | Y | | DL | 1.2 | 7 | .061 | 23 | .061 | OL1 | 1.5 | | | | | | | | | | | | |
| 39 | 1.2D + 1.5Lm_1 +... | Yes | Y | | DL | 1.2 | 8 | .061 | 24 | .061 | OL1 | 1.5 | | | | | | | | | | | | |
| 40 | 1.2D + 1.5Lm_1 +... | Yes | Y | | DL | 1.2 | 9 | .061 | 25 | .061 | OL1 | 1.5 | | | | | | | | | | | | |
| 41 | 1.2D + 1.5Lm_1 +... | Yes | Y | | DL | 1.2 | 10 | .061 | 26 | .061 | OL1 | 1.5 | | | | | | | | | | | | |
| 42 | 1.2D + 1.5Lm_1 +... | Yes | Y | | DL | 1.2 | 11 | .061 | 27 | .061 | OL1 | 1.5 | | | | | | | | | | | | |
| 43 | 1.2D + 1.5Lm_1 +... | Yes | Y | | DL | 1.2 | 4 | -.061 | 20 | -.061 | OL1 | 1.5 | | | | | | | | | | | | |
| 44 | 1.2D + 1.5Lm_1 +... | Yes | Y | | DL | 1.2 | 5 | -.061 | 21 | -.061 | OL1 | 1.5 | | | | | | | | | | | | |
| 45 | 1.2D + 1.5Lm_1 +... | Yes | Y | | DL | 1.2 | 6 | -.061 | 22 | -.061 | OL1 | 1.5 | | | | | | | | | | | | |
| 46 | 1.2D + 1.5Lm_1 +... | Yes | Y | | DL | 1.2 | 7 | -.061 | 23 | -.061 | OL1 | 1.5 | | | | | | | | | | | | |
| 47 | 1.2D + 1.5Lm_1 +... | Yes | Y | | DL | 1.2 | 8 | -.061 | 24 | -.061 | OL1 | 1.5 | | | | | | | | | | | | |
| 48 | 1.2D + 1.5Lm_1 +... | Yes | Y | | DL | 1.2 | 9 | -.061 | 25 | -.061 | OL1 | 1.5 | | | | | | | | | | | | |
| 49 | 1.2D + 1.5Lm_1 +... | Yes | Y | | DL | 1.2 | 10 | -.061 | 26 | -.061 | OL1 | 1.5 | | | | | | | | | | | | |
| 50 | 1.2D + 1.5Lm_1 +... | Yes | Y | | DL | 1.2 | 11 | -.061 | 27 | -.061 | OL1 | 1.5 | | | | | | | | | | | | |
| 51 | 1.2D + 1.5Lm_2 +... | Yes | Y | | DL | 1.2 | 4 | .061 | 20 | .061 | OL2 | 1.5 | | | | | | | | | | | | |
| 52 | 1.2D + 1.5Lm_2 +... | Yes | Y | | DL | 1.2 | 5 | .061 | 21 | .061 | OL2 | 1.5 | | | | | | | | | | | | |
| 53 | 1.2D + 1.5Lm_2 +... | Yes | Y | | DL | 1.2 | 6 | .061 | 22 | .061 | OL2 | 1.5 | | | | | | | | | | | | |
| 54 | 1.2D + 1.5Lm_2 +... | Yes | Y | | DL | 1.2 | 7 | .061 | 23 | .061 | OL2 | 1.5 | | | | | | | | | | | | |
| 55 | 1.2D + 1.5Lm_2 +... | Yes | Y | | DL | 1.2 | 8 | .061 | 24 | .061 | OL2 | 1.5 | | | | | | | | | | | | |
| 56 | 1.2D + 1.5Lm_2 +... | Yes | Y | | DL | 1.2 | 9 | .061 | 25 | .061 | OL2 | 1.5 | | | | | | | | | | | | |
| 57 | 1.2D + 1.5Lm_2 +... | Yes | Y | | DL | 1.2 | 10 | .061 | 26 | .061 | OL2 | 1.5 | | | | | | | | | | | | |
| 58 | 1.2D + 1.5Lm_2 +... | Yes | Y | | DL | 1.2 | 11 | .061 | 27 | .061 | OL2 | 1.5 | | | | | | | | | | | | |
| 59 | 1.2D + 1.5Lm_2 +... | Yes | Y | | DL | 1.2 | 4 | -.061 | 20 | -.061 | OL2 | 1.5 | | | | | | | | | | | | |
| 60 | 1.2D + 1.5Lm_2 +... | Yes | Y | | DL | 1.2 | 5 | -.061 | 21 | -.061 | OL2 | 1.5 | | | | | | | | | | | | |
| 61 | 1.2D + 1.5Lm_2 +... | Yes | Y | | DL | 1.2 | 6 | -.061 | 22 | -.061 | OL2 | 1.5 | | | | | | | | | | | | |

## Load Combinations (Continued)

| | Description | Solve | PDe.. | SRSS | BLC | Fac.. | BLC | Fac.. | BLC | Fac.. | BLC | Fac.. | BLC | Fac.. | BLC | Fac.. | BLC | Fac.. | BLC | Fac.. | BLC | Fac.. | BLC | Fac... |
|---|---|---|---|---|---|---|---|---|---|---|---|---|---|---|---|---|---|---|---|---|---|---|---|---|
| 62 | 1.2D + 1.5Lm_2 +... | Yes | Y | | DL | 1.2 | 7 | -.061 | 23 | -.061 | OL2 | 1.5 | | | | | | | | | | | | |
| 63 | 1.2D + 1.5Lm_2 +... | Yes | Y | | DL | 1.2 | 8 | -.061 | 24 | -.061 | OL2 | 1.5 | | | | | | | | | | | | |
| 64 | 1.2D + 1.5Lm_2 +... | Yes | Y | | DL | 1.2 | 9 | -.061 | 25 | -.061 | OL2 | 1.5 | | | | | | | | | | | | |
| 65 | 1.2D + 1.5Lm_2 +... | Yes | Y | | DL | 1.2 | 10 | -.061 | 26 | -.061 | OL2 | 1.5 | | | | | | | | | | | | |
| 66 | 1.2D + 1.5Lm_2 +... | Yes | Y | | DL | 1.2 | 11 | -.061 | 27 | -.061 | OL2 | 1.5 | | | | | | | | | | | | |
| 67 | 1.2D + 1.5Lm_3 +... | Yes | Y | | DL | 1.2 | 4 | .061 | 20 | .061 | OL3 | 1.5 | | | | | | | | | | | | |
| 68 | 1.2D + 1.5Lm_3 +... | Yes | Y | | DL | 1.2 | 5 | .061 | 21 | .061 | OL3 | 1.5 | | | | | | | | | | | | |
| 69 | 1.2D + 1.5Lm_3 +... | Yes | Y | | DL | 1.2 | 6 | .061 | 22 | .061 | OL3 | 1.5 | | | | | | | | | | | | |
| 70 | 1.2D + 1.5Lm_3 +... | Yes | Y | | DL | 1.2 | 7 | .061 | 23 | .061 | OL3 | 1.5 | | | | | | | | | | | | |
| 71 | 1.2D + 1.5Lm_3 +... | Yes | Y | | DL | 1.2 | 8 | .061 | 24 | .061 | OL3 | 1.5 | | | | | | | | | | | | |
| 72 | 1.2D + 1.5Lm_3 +... | Yes | Y | | DL | 1.2 | 9 | .061 | 25 | .061 | OL3 | 1.5 | | | | | | | | | | | | |
| 73 | 1.2D + 1.5Lm_3 +... | Yes | Y | | DL | 1.2 | 10 | .061 | 26 | .061 | OL3 | 1.5 | | | | | | | | | | | | |
| 74 | 1.2D + 1.5Lm_3 +... | Yes | Y | | DL | 1.2 | 11 | .061 | 27 | .061 | OL3 | 1.5 | | | | | | | | | | | | |
| 75 | 1.2D + 1.5Lm_3 +... | Yes | Y | | DL | 1.2 | 4 | -.061 | 20 | -.061 | OL3 | 1.5 | | | | | | | | | | | | |
| 76 | 1.2D + 1.5Lm_3 +... | Yes | Y | | DL | 1.2 | 5 | -.061 | 21 | -.061 | OL3 | 1.5 | | | | | | | | | | | | |
| 77 | 1.2D + 1.5Lm_3 +... | Yes | Y | | DL | 1.2 | 6 | -.061 | 22 | -.061 | OL3 | 1.5 | | | | | | | | | | | | |
| 78 | 1.2D + 1.5Lm_3 +... | Yes | Y | | DL | 1.2 | 7 | -.061 | 23 | -.061 | OL3 | 1.5 | | | | | | | | | | | | |
| 79 | 1.2D + 1.5Lm_3 +... | Yes | Y | | DL | 1.2 | 8 | -.061 | 24 | -.061 | OL3 | 1.5 | | | | | | | | | | | | |
| 80 | 1.2D + 1.5Lm_3 +... | Yes | Y | | DL | 1.2 | 9 | -.061 | 25 | -.061 | OL3 | 1.5 | | | | | | | | | | | | |
| 81 | 1.2D + 1.5Lm_3 +... | Yes | Y | | DL | 1.2 | 10 | -.061 | 26 | -.061 | OL3 | 1.5 | | | | | | | | | | | | |
| 82 | 1.2D + 1.5Lm_3 +... | Yes | Y | | DL | 1.2 | 11 | -.061 | 27 | -.061 | OL3 | 1.5 | | | | | | | | | | | | |

## Hot Rolled Steel Properties

| | Label | E [ksi] | G [ksi] | Nu | Therm (\1... | Density[k/ft... | Yield[ksi] | Ry | Fu[ksi] | Rt |
|---|---|---|---|---|---|---|---|---|---|---|
| 1 | A992 | 29000 | 11154 | .3 | .65 | .49 | 50 | 1.1 | 65 | 1.1 |
| 2 | A36 Gr.36 | 29000 | 11154 | .3 | .65 | .49 | 36 | 1.5 | 58 | 1.2 |
| 3 | A572 Gr.50 | 29000 | 11154 | .3 | .65 | .49 | 50 | 1.1 | 65 | 1.1 |
| 4 | A500 Gr.B RND | 29000 | 11154 | .3 | .65 | .527 | 42 | 1.4 | 58 | 1.3 |
| 5 | A500 Gr.B Rect | 29000 | 11154 | .3 | .65 | .527 | 46 | 1.4 | 58 | 1.3 |
| 6 | A53 Gr.B | 29000 | 11154 | .3 | .65 | .49 | 35 | 1.6 | 60 | 1.2 |
| 7 | A1085 | 29000 | 11154 | .3 | .65 | .49 | 50 | 1.4 | 65 | 1.3 |

## Hot Rolled Steel Section Sets

| | Label | Shape | Type | Design List | Material | Design Ru... | A [in2] | Iyy [in4] | Izz [in4] | J [in4] |
|---|---|---|---|---|---|---|---|---|---|---|
| 1 | Offset Arm | HSS4X4X4 | Beam | None | A36 Gr.36 | Typical | 3.37 | 7.8 | 7.8 | 12.8 |
| 2 | Face Horiz. Pipe | PIPE_3.0 | Beam | None | A53 Gr.B | Typical | 2.07 | 2.85 | 2.85 | 5.69 |
| 3 | Offset Side PL | PL4x.375 | Beam | None | A36 Gr.36 | Typical | 1.5 | .018 | 2 | .066 |
| 4 | Offset End Plate | PL4x.375 | Beam | None | A36 Gr.36 | Typical | 1.5 | .018 | 2 | .066 |
| 5 | Grating Angle | L2x2x3 | Beam | None | A36 Gr.36 | Typical | .722 | .271 | .271 | .009 |
| 6 | Mount Pipe | PIPE_2.0 | Column | None | A53 Gr.B | Typical | 1.02 | .627 | .627 | 1.25 |
| 7 | Circular PL 1 | PL4x.24 | Beam | None | A36 Gr.36 | Typical | .96 | .005 | 1.28 | .018 |
| 8 | Circular PL Angle 2 | L3X2X.25 | Beam | None | A36 Gr.36 | Typical | 1.188 | .392 | 1.087 | .023 |
| 9 | Offset Side Angle | 4x4x0.25 | Beam | None | A36 Gr.36 | Typical | 1.938 | 3.039 | 3.039 | .039 |
| 10 | MOD PRK | L2.5x2.5x3 | Beam | None | A36 Gr.36 | Typical | .901 | .535 | .535 | .011 |

## Hot Rolled Steel Design Parameters

| | Label | Shape | Length[in] | Lbyy[in] | Lbzz[in] | Lcomp top[... | Lcomp... | L-tor... | Kyy | Kzz | Cb | Functi... |
|---|---|---|---|---|---|---|---|---|---|---|---|---|
| 1 | M8 | Offset Arm | 38 | | | Lbyy | | | | | | Lateral |
| 2 | M22 | Face Horiz. Pipe | 75 | 35.245 | | Lbyy | | | | | | Lateral |
| 3 | M23 | Face Horiz. Pipe | 75 | | | Lbyy | | | | | | Lateral |
| 4 | M28 | Circular PL Angle 2 | 29.552 | | | Lbyy | | | | | | Lateral |
| 5 | M29 | Circular PL Angle 2 | 29.552 | | | Lbyy | | | | | | Lateral |
| 6 | M30 | Face Horiz. Pipe | 75 | 35.245 | | Lbyy | | | | | | Lateral |
| 7 | M31 | Face Horiz. Pipe | 75 | 35.245 | | Lbyy | | | | | | Lateral |
| 8 | M36 | Circular PL Angle 2 | 29.552 | | | Lbyy | | | | | | Lateral |
| 9 | M37 | Circular PL Angle 2 | 29.552 | | | Lbyy | | | | | | Lateral |
| 10 | M38 | Face Horiz. Pipe | 75 | 35.245 | | Lbyy | | | | | | Lateral |
| 11 | M39 | Face Horiz. Pipe | 75 | 35.245 | | Lbyy | | | | | | Lateral |
| 12 | M44 | Circular PL Angle 2 | 29.552 | | | Lbyy | | | | | | Lateral |
| 13 | M45 | Circular PL Angle 2 | 29.552 | | | Lbyy | | | | | | Lateral |
| 14 | M40A | Offset Side PL | 8 | | | Lbyy | | | | | | Lateral |
| 15 | M41A | Offset Side PL | 2.439 | | | Lbyy | | | | | | Lateral |
| 16 | M42A | Offset Side Angle | 38 | | | Lbyy | | | | | | Lateral |
| 17 | M42C | Offset Side PL | 8 | | | Lbyy | | | | | | Lateral |
| 18 | M43A | Offset Side PL | 8 | | | Lbyy | | | | | | Lateral |
| 19 | M44A | Offset Side Angle | 38 | | | Lbyy | | | | | | Lateral |
| 20 | M49 | Offset Side PL | 8 | | | Lbyy | | | | | | Lateral |
| 21 | M50 | Offset Side PL | 8 | | | Lbyy | | | | | | Lateral |
| 22 | M51 | Offset Side Angle | 38 | | | Lbyy | | | | | | Lateral |
| 23 | M59 | Offset End Plate | 18.755 | | | Lbyy | | | | | | Lateral |
| 24 | M60 | Offset End Plate | 18.755 | 7.633 | | Lbyy | | | | | | Lateral |
| 25 | M61 | Offset End Plate | 18.755 | | | Lbyy | | | | | | Lateral |
| 26 | M63 | Mount Pipe | 84 | | | Lbyy | | | | | | Lateral |
| 27 | M65 | Mount Pipe | 84 | | | Lbyy | | | | | | Lateral |
| 28 | M67 | Mount Pipe | 84 | | | Lbyy | | | | | | Lateral |
| 29 | M71 | Mount Pipe | 84 | | | Lbyy | | | | | | Lateral |
| 30 | M75 | Mount Pipe | 84 | | | Lbyy | | | | | | Lateral |
| 31 | M79 | Mount Pipe | 84 | | | Lbyy | | | | | | Lateral |
| 32 | M83 | Mount Pipe | 84 | | | Lbyy | | | | | | Lateral |
| 33 | M91 | Grating Angle | 35.245 | | | Lbyy | | | | | | Lateral |
| 34 | M104A | Offset Side PL | 5.561 | | | Lbyy | | | | | | Lateral |
| 35 | M90 | Grating Angle | 35.245 | | | Lbyy | | | | | | Lateral |
| 36 | M93 | Grating Angle | 35.245 | | | Lbyy | | | | | | Lateral |
| 37 | M96 | Grating Angle | 35.245 | | | Lbyy | | | | | | Lateral |
| 38 | M99 | Grating Angle | 35.245 | | | Lbyy | | | | | | Lateral |
| 39 | M102 | Grating Angle | 35.245 | | | Lbyy | | | | | | Lateral |
| 40 | M89 | Mount Pipe | 84 | | | Lbyy | | | | | | Lateral |
| 41 | M91B | Mount Pipe | 84 | | | Lbyy | | | | | | Lateral |
| 42 | M118A | Offset Arm | 38 | | | Lbyy | | | | | | Lateral |
| 43 | M120A | Offset Arm | 38 | | | Lbyy | | | | | | Lateral |
| 44 | PR5 | MOD PRK | 33.75 | | | | | | | | | Lateral |
| 45 | PR6 | MOD PRK | 33.75 | | | | | | | | | Lateral |
| 46 | PR11 | MOD PRK | 33.75 | | | | | | | | | Lateral |
| 47 | PR12 | MOD PRK | 33.75 | | | | | | | | | Lateral |
| 48 | PR17 | MOD PRK | 33.75 | | | | | | | | | Lateral |
| 49 | PR18 | MOD PRK | 33.75 | | | | | | | | | Lateral |

## Envelope Joint Reactions

| | Joint | | X [lb] | LC | Y [lb] | LC | Z [lb] | LC | MX [lb-ft] | LC | MY [lb-ft] | LC | MZ [lb-ft] | LC |
|---|---|---|---|---|---|---|---|---|---|---|---|---|---|---|
| 1 | N16 | max | 1705.603 | 19 | 1454.487 | 15 | -52.717 | 76 | 82.251 | 15 | -20.247 | 72 | 2970.93 | 7 |
| 2 | | min | -489.978 | 11 | -1758.473 | 7 | -510.72 | 19 | -106.554 | 7 | -192.929 | 33 | -3044.532 | 15 |
| 3 | N168 | max | 1024.924 | 4 | 747.072 | 14 | -71.385 | 17 | 24.567 | 13 | 145.157 | 28 | 2970.819 | 12 |
| 4 | | min | -1740.463 | 12 | -1376.362 | 6 | -511.393 | 25 | -159.542 | 21 | -31.497 | 4 | -3044.43 | 4 |
| 5 | N163A | max | 1305.193 | 18 | 1775.885 | 32 | -74.344 | 7 | 188.486 | 32 | 110.967 | 10 | 2970.801 | 18 |
| 6 | | min | -1494.248 | 10 | -559.237 | 8 | -510.71 | 30 | 25.155 | 9 | -73.5 | 18 | -3044.415 | 10 |
| 7 | P5 | max | -227.717 | 76 | 460.855 | 19 | 3090.06 | 19 | 229.456 | 23 | 842.859 | 19 | 55.942 | 7 |
| 8 | | min | -1713.3 | 19 | 60.643 | 75 | 409.847 | 76 | -19.904 | 15 | 112.248 | 75 | -60.304 | 15 |
| 9 | P13 | max | 460.013 | 31 | -291.84 | 6 | 3090.008 | 30 | -125.697 | 7 | .121 | 3 | 55.94 | 18 |
| 10 | | min | 70.899 | 7 | -1714.16 | 30 | 477.563 | 7 | -837.086 | 31 | -246.569 | 27 | -60.302 | 10 |
| 11 | P21 | max | 1256.212 | 25 | 1255.919 | 25 | 3093.974 | 25 | 623.767 | 24 | -79.84 | 1 | 55.94 | 12 |
| 12 | | min | 208.382 | 17 | 208.308 | 17 | 461.77 | 17 | 92.32 | 16 | -610.974 | 27 | -60.301 | 4 |
| 13 | Totals: | max | 3266.045 | 3 | 3266.097 | 15 | 7402.2 | 32 | | | | | | |
| 14 | | min | -3266.054 | 11 | -3266.097 | 7 | 1967.955 | 1 | | | | | | |

## Envelope AISC 14th(360-10): LRFD Steel Code Checks

| | Member | Shape | Code Ch... | Loc[in] | LC | Shear ... | Loc[in] | ... | LC | phi*Pnc ... | phi*Pnt [... | phi*Mn y-y [... | phi*Mn z... | Cb | Eqn |
|---|---|---|---|---|---|---|---|---|---|---|---|---|---|---|---|
| 1 | M65 | PIPE_2.0 | .641 | 42 | 3 | .069 | 42 | | 5 | 17855.0... | 32130 | 1871.625 | 1871.625 | 1.406 | H1-1b |
| 2 | M91B | PIPE_2.0 | .641 | 42 | 8 | .067 | 42 | | 7 | 17855.0... | 32130 | 1871.625 | 1871.625 | 1.29 | H1-1b |
| 3 | M89 | PIPE_2.0 | .641 | 42 | 14 | .067 | 42 | | 12 | 17855.0... | 32130 | 1871.625 | 1871.625 | 1.29 | H1-1b |
| 4 | M51 | 4x4x0.25 | .624 | 6.729 | 21 | .458 | 6.729 | y | 11 | 51282.3... | 62775 | 3209.898 | 6766.608 | 1.319 | H2-1 |
| 5 | M42A | 4x4x0.25 | .623 | 6.729 | 32 | .458 | 6.729 | y | 6 | 51282.3... | 62775 | 3209.898 | 6766.608 | 1.324 | H2-1 |
| 6 | M44A | 4x4x0.25 | .623 | 6.729 | 27 | .458 | 6.729 | y | 16 | 51282.3... | 62775 | 3209.898 | 6766.608 | 1.324 | H2-1 |
| 7 | M49 | PL4x.375 | .448 | 5.5 | 33 | .573 | 8 | y | 31 | 36456.2... | 48600 | 379.688 | 4050 | 1.71 | H1-1b |
| 8 | M40A | PL4x.375 | .447 | 5.5 | 28 | .573 | 8 | y | 26 | 36456.2... | 48600 | 379.688 | 4050 | 1.691 | H1-1b |
| 9 | M42C | PL4x.375 | .447 | 5.5 | 23 | .573 | 8 | y | 21 | 36456.2... | 48600 | 379.688 | 4050 | 1.691 | H1-1b |
| 10 | M39 | PIPE_3.0 | .396 | 25.781 | 76 | .173 | 25 | | 31 | 52901.4... | 65205 | 5748.75 | 5748.75 | 1.533 | H1-1b |
| 11 | M31 | PIPE_3.0 | .371 | 25.781 | 34 | .173 | 25 | | 20 | 52901.4... | 65205 | 5748.75 | 5748.75 | 1.479 | H1-1b |
| 12 | M23 | PIPE_3.0 | .371 | 25.781 | 23 | .173 | 25 | | 26 | 52901.4... | 65205 | 5748.75 | 5748.75 | 1.479 | H1-1b |
| 13 | M61 | PL4x.375 | .342 | 0 | 33 | .088 | 5.665 | y | 34 | 11289.9... | 48600 | 379.688 | 4050 | 1.395 | H1-1b |
| 14 | M59 | PL4x.375 | .341 | 0 | 27 | .132 | 5.665 | y | 76 | 11289.9... | 48600 | 379.688 | 4050 | 1.401 | H1-1b |
| 15 | M60 | PL4x.375 | .341 | 0 | 22 | .088 | 5.665 | y | 23 | 37409.0... | 48600 | 379.688 | 4050 | 1.401 | H1-1b |
| 16 | M29 | L3X2X.25 | .340 | 29.552 | 5 | .034 | 29.552 | y | 21 | 30170.7... | 38475 | 842.711 | 2496.417 | 2.149 | H2-1 |
| 17 | M37 | L3X2X.25 | .340 | 29.552 | 15 | .034 | 29.552 | y | 32 | 30170.7... | 38475 | 842.711 | 2496.417 | 2.173 | H2-1 |
| 18 | M45 | L3X2X.25 | .340 | 29.552 | 10 | .034 | 29.552 | y | 27 | 30170.7... | 38475 | 842.711 | 2496.417 | 2.173 | H2-1 |
| 19 | M43A | PL4x.375 | .282 | 8 | 45 | .268 | 0 | y | 27 | 36456.2... | 48600 | 379.688 | 4050 | 1.413 | H1-1b |
| 20 | M96 | L2x2x3 | .273 | 0 | 31 | .026 | 0 | z | 34 | 15184.2... | 23392.8 | 557.717 | 1239.29 | 1.936 | H2-1 |
| 21 | M102 | L2x2x3 | .273 | 0 | 26 | .026 | 0 | z | 28 | 15184.2... | 23392.8 | 557.717 | 1239.29 | 1.936 | H2-1 |
| 22 | M90 | L2x2x3 | .273 | 0 | 20 | .026 | 0 | z | 23 | 15184.2... | 23392.8 | 557.717 | 1239.29 | 1.936 | H2-1 |
| 23 | M41A | PL4x.375 | .265 | 0 | 28 | .269 | 0 | y | 33 | 47318.4... | 48600 | 379.688 | 4050 | 1.145 | H1-1b |
| 24 | M50 | PL4x.375 | .265 | 0 | 34 | .268 | 0 | y | 22 | 36456.2... | 48600 | 379.688 | 4050 | 1.531 | H1-1b |
| 25 | M63 | PIPE_2.0 | .257 | 42 | 11 | .041 | 42 | | 15 | 17855.0... | 32130 | 1871.625 | 1871.625 | 1.575 | H1-1b |
| 26 | M79 | PIPE_2.0 | .257 | 42 | 16 | .041 | 42 | | 4 | 17855.0... | 32130 | 1871.625 | 1871.625 | 1.541 | H1-1b |
| 27 | M71 | PIPE_2.0 | .257 | 42 | 6 | .041 | 42 | | 10 | 17855.0... | 32130 | 1871.625 | 1871.625 | 1.541 | H1-1b |
| 28 | M36 | L3X2X.25 | .249 | 0 | 8 | .017 | 29.552 | y | 8 | 30170.7... | 38475 | 842.711 | 2496.417 | 2.097 | H2-1 |
| 29 | M28 | L3X2X.25 | .249 | 0 | 14 | .017 | 29.552 | y | 14 | 30170.7... | 38475 | 842.711 | 2496.417 | 2.097 | H2-1 |
| 30 | M44 | L3X2X.25 | .249 | 0 | 3 | .017 | 29.552 | y | 3 | 30170.7... | 38475 | 842.711 | 2496.417 | 2.097 | H2-1 |
| 31 | M8 | HSS4X4X4 | .245 | 0 | 15 | .081 | 23.75 | y | 19 | 105660... | 109188 | 12663 | 12663 | 2.174 | H1-1b |
| 32 | M120A | HSS4X4X4 | .245 | 0 | 4 | .081 | 23.75 | y | 25 | 105660... | 109188 | 12663 | 12663 | 2.174 | H1-1b |

## Envelope AISC 14th(360-10): LRFD Steel Code Checks (Continued)

| | Member | Shape | Code Ch... | Loc[in] | LC | Shear ... | Loc[in] | ... | LC | phi*Pnc ... | phi*Pnt [... | phi*Mn y-y [... | phi*Mn z... | Cb | Eqn |
|---|---|---|---|---|---|---|---|---|---|---|---|---|---|---|---|
| 33 | M118A | HSS4X4X4 | .245 | 0 | 10 | .081 | 23.75 | y | 30 | 105660... | 109188 | 12663 | 12663 | 2.174 | H1-1b |
| 34 | M104A | PL4x.375 | .229 | 5.561 | 44 | .053 | 0 | y | 12 | 42296.2... | 48600 | 379.688 | 4029.283 | 1.018 | H1-1b |
| 35 | M30 | PIPE_3.0 | .199 | 49.219 | 44 | .107 | 14.062 | | 22 | 52901.4... | 65205 | 5748.75 | 5748.75 | 1.582 | H1-1b |
| 36 | M99 | L2x2x3 | .187 | 0 | 21 | .012 | 0 | y | 34 | 15184.2... | 23392.8 | 557.717 | 1239.29 | 1.717 | H2-1 |
| 37 | M93 | L2x2x3 | .187 | 0 | 27 | .012 | 0 | y | 23 | 15184.2... | 23392.8 | 557.717 | 1239.29 | 1.736 | H2-1 |
| 38 | M91 | L2x2x3 | .187 | 0 | 32 | .017 | 0 | y | 76 | 15184.2... | 23392.8 | 557.717 | 1239.29 | 1.736 | H2-1 |
| 39 | M38 | PIPE_3.0 | .165 | 49.219 | 23 | .107 | 14.062 | | 32 | 52901.4... | 65205 | 5748.75 | 5748.75 | 1.424 | H1-1b |
| 40 | M22 | PIPE_3.0 | .165 | 49.219 | 34 | .153 | 50 | | 71 | 52901.4... | 65205 | 5748.75 | 5748.75 | 1.424 | H1-1b |
| 41 | PR6 | L2.5x2.5x3 | .099 | 17.578 | 32 | .008 | 33.75 | y | 15 | 22281.0... | 29192.4 | 872.574 | 1877.507 | 1.136 | H2-1 |
| 42 | PR12 | L2.5x2.5x3 | .099 | 17.578 | 27 | .008 | 0 | y | 10 | 22281.0... | 29192.4 | 872.574 | 1877.507 | 1.136 | H2-1 |
| 43 | PR18 | L2.5x2.5x3 | .099 | 17.578 | 22 | .008 | 0 | y | 5 | 22281.0... | 29192.4 | 872.574 | 1877.507 | 1.136 | H2-1 |
| 44 | PR11 | L2.5x2.5x3 | .094 | 17.578 | 33 | .008 | 33.75 | z | 10 | 22281.0... | 29192.4 | 872.574 | 1877.507 | 1.136 | H2-1 |
| 45 | PR5 | L2.5x2.5x3 | .093 | 17.578 | 22 | .008 | 0 | z | 15 | 22281.0... | 29192.4 | 872.574 | 1877.507 | 1.136 | H2-1 |
| 46 | PR17 | L2.5x2.5x3 | .093 | 17.578 | 27 | .008 | 0 | z | 5 | 22281.0... | 29192.4 | 872.574 | 1877.507 | 1.136 | H2-1 |
| 47 | M75 | PIPE_2.0 | .027 | 42 | 16 | .003 | 42 | | 16 | 17855.0... | 32130 | 1871.625 | 1871.625 | 1.562 | H1-1b |
| 48 | M83 | PIPE_2.0 | .027 | 42 | 11 | .003 | 42 | | 11 | 17855.0... | 32130 | 1871.625 | 1871.625 | 1.316 | H1-1b |
| 49 | M67 | PIPE_2.0 | .027 | 42 | 6 | .003 | 42 | | 6 | 17855.0... | 32130 | 1871.625 | 1871.625 | 1.562 | H1-1b |

# Exhibit F

## Power Density/RF Emissions Report

EBI Consulting

environmental | engineering | due diligence

# RADIO FREQUENCY EMISSIONS ANALYSIS REPORT EVALUATION OF HUMAN EXPOSURE POTENTIAL TO NON-IONIZING EMISSIONS

T-Mobile Existing Facility

Site ID: CTHA240A

CTHA240/Verizon_BB
Christian Hill Road/ 100 Berlin Rd
Cromwell, Connecticut 06416

**June 12, 2019**

**EBI Project Number: 6219002195**

| **Site Compliance Summary** | |
|---|---|
| Compliance Status: | **COMPLIANT** |
| Site total MPE% of FCC general population allowable limit: | **29.47%** |

21 B Street, Burlington, MA 01803 · Tel: (781) 273.2500 · Fax: (781) 273.3311

June 12, 2019

T-Mobile
Attn: Jason Overbey, RF Manager
35 Griffin Road South
Bloomfield, Connecticut 06002

Emissions Analysis for Site: CTHA240A - CTHA240/Verizon_BB

EBI Consulting was directed to analyze the proposed T-Mobile facility located at **Christian Hill Road/ 100 Berlin Rd** in **Cromwell, Connecticut** for the purpose of determining whether the emissions from the Proposed T-Mobile Antenna Installation located on this property are within specified federal limits.

All information used in this report was analyzed as a percentage of current Maximum Permissible Exposure (% MPE) as listed in the FCC OET Bulletin 65 Edition 97-01and ANSI/IEEE Std C95.1. The FCC regulates Maximum Permissible Exposure in units of microwatts per square centimeter ($\mu W/cm^2$). The number of $\mu W/cm^2$ calculated at each sample point is called the power density. The exposure limit for power density varies depending upon the frequencies being utilized. Wireless Carriers and Paging Services use different frequency bands each with different exposure limits; therefore, it is necessary to report results and limits in terms of percent MPE rather than power density.

All results were compared to the FCC (Federal Communications Commission) radio frequency exposure rules, 47 CFR 1.1307(b)(1) – (b)(3), to determine compliance with the Maximum Permissible Exposure (MPE) limits for General Population/Uncontrolled environments as defined below.

General population/uncontrolled exposure limits apply to situations in which the general population may be exposed or in which persons who are exposed as a consequence of their employment may not be made fully aware of the potential for exposure or cannot exercise control over their exposure. Therefore, members of the general population would always be considered under this category when exposure is not employment related, for example, in the case of a telecommunications tower that exposes persons in a nearby residential area.

Public exposure to radio frequencies is regulated and enforced in units of microwatts per square centimeter ($\mu W/cm^2$). The general population exposure limits for the 600 MHz and 700 MHz frequency bands are approximately 400 $\mu W/cm^2$ and 467 $\mu W/cm^2$, respectively. The general population exposure limit for the 1900 MHz (PCS), 2100 MHz (AWS) and 11 GHz frequency bands is 1000 $\mu W/cm^2$. Because each carrier will be using different frequency bands, and each frequency band has different exposure limits, it is necessary to report percent of MPE rather than power density.

Occupational/controlled exposure limits apply to situations in which persons are exposed as a consequence of their employment and in which those persons who are exposed have been made fully aware of the potential for exposure and can exercise control over their exposure. Occupational/controlled exposure limits also apply where exposure is of a transient nature as a result of incidental passage through a location where exposure levels may be above general population/uncontrolled limits (see below), as long as the exposed person has been made fully aware of the potential for exposure and can exercise control over his or her exposure by leaving the area or by some other appropriate means.

Additional details can be found in FCC OET 65.

## CALCULATIONS

Calculations were done for the proposed T-Mobile Wireless antenna facility located at Christian Hill Road/ 100 Berlin Rd in Cromwell, Connecticut using the equipment information listed below. All calculations were performed per the specifications under FCC OET 65. Since T-Mobile is proposing highly focused directional panel antennas, which project most of the emitted energy out toward the horizon, all calculations were performed assuming a lobe representing the maximum gain of the antenna per the antenna manufacturer's supplied specifications, minus 10 dB for directional panel antennas and 20 dB for highly focused parabolic microwave dishes, was focused at the base of the tower. For this report, the sample point is the top of a 6-foot person standing at the base of the tower.

For all calculations, all equipment was calculated using the following assumptions:

1) 2 LTE channels (600 MHz Band) were considered for each sector of the proposed installation. These Channels have a transmit power of 30 Watts per Channel.

2) 2 LTE channels (700 MHz Band) were considered for each sector of the proposed installation. These Channels have a transmit power of 30 Watts per Channel.

3) 4 GSM channels (PCS Band - 1900 MHz) were considered for each sector of the proposed installation. These Channels have a transmit power of 30 Watts per Channel.

4) 2 LTE channels (PCS Band - 1900 MHz) were considered for each sector of the proposed installation. These Channels have a transmit power of 60 Watts per Channel.

5) 2 UMTS channels (AWS Band - 2100 MHz) were considered for each sector of the proposed installation. These Channels have a transmit power of 30 Watts per Channel.

6) 2 LTE channels (AWS Band – 2100 MHz) were considered for each sector of the proposed installation. These Channels have a transmit power of 60 Watts per Channel.

7) All radios at the proposed installation were considered to be running at full power and were uncombined in their RF transmissions paths per carrier prescribed configuration. Per FCC OET Bulletin No. 65 - Edition 97-01 recommendations to achieve the maximum anticipated value at each sample point, all power levels emitting from the proposed antenna installation are increased by a factor of 2.56 to account for possible in-phase reflections from the surrounding environment. This is rarely the case, and if so, is never continuous.

8) For the following calculations, the sample point was the top of a 6-foot person standing at the base of the tower. The maximum gain of the antenna per the antenna manufacturer's supplied specifications, minus 10 dB for directional panel antennas and 20 dB for highly focused parabolic microwave dishes, was used in this direction. This value is a very conservative estimate as gain reductions for these particular antennas are typically much higher in this direction.

9) The antennas used in this modeling are the Ericsson AIR 32 for the 1900 MHz / 1900 MHz / 2100 MHz channel(s), the RFS APXVAARR24_43-U-NA20 for the 2100 MHz / 600 MHz / 700 MHz channel(s) in Sector A, the Ericsson AIR 32 for the 1900 MHz / 1900 MHz / 2100 MHz channel(s), the RFS APXVAARR24_43-U-NA20 for the 2100 MHz / 600 MHz / 700 MHz channel(s) in Sector B, the Ericsson AIR 32 for the 1900 MHz / 1900 MHz / 2100 MHz channel(s), the RFS APXVAARR24_43-U-NA20 for the 2100 MHz / 600 MHz / 700 MHz channel(s) in Sector C. This is based on feedback from the carrier with regard to anticipated antenna selection. All Antenna gain values and associated transmit power levels are shown in the Site Inventory and Power Data table below. The maximum gain of the antenna per the antenna manufacturer's supplied specifications, minus 10 dB for directional panel antennas and 20 dB for highly focused parabolic microwave dishes, was used for all calculations. This value is a very conservative estimate as gain reductions for these particular antennas are typically much higher in this direction.

10) The antenna mounting height centerline of the proposed antennas is 108 feet above ground level (AGL).

11) Emissions values for additional carriers were taken from the Connecticut Siting Council active database. Values in this database are provided by the individual carriers themselves.

12) All calculations were done with respect to uncontrolled / general population threshold limits.

# T-Mobile Site Inventory and Power Data

| Sector: | A | Sector: | B | Sector: | C |
|---|---|---|---|---|---|
| Antenna #: | **1** | Antenna #: | **1** | Antenna #: | **1** |
| Make / Model: | Ericsson AIR 32 | Make / Model: | Ericsson AIR 32 | Make / Model: | Ericsson AIR 32 |
| Frequency Bands: | 1900 MHz / 1900 MHz / 2100 MHz | Frequency Bands: | 1900 MHz / 1900 MHz / 2100 MHz | Frequency Bands: | 1900 MHz / 1900 MHz / 2100 MHz |
| Gain: | 15.35 dBd / 15.35 dBd / 15.85 dBd | Gain: | 15.35 dBd / 15.35 dBd / 15.85 dBd | Gain: | 15.35 dBd / 15.35 dBd / 15.85 dBd |
| Height (AGL): | 108 feet | Height (AGL): | 108 feet | Height (AGL): | 108 feet |
| Channel Count: | 8 | Channel Count: | 8 | Channel Count: | 8 |
| Total TX Power (W): | 360 Watts | Total TX Power (W): | 360 Watts | Total TX Power (W): | 360 Watts |
| ERP (W): | 12,841.53 | ERP (W): | 12,841.53 | ERP (W): | 12,841.53 |
| Antenna A1 MPE %: | **3.96%** | Antenna B1 MPE %: | **3.96%** | Antenna C1 MPE %: | **3.96%** |
| Antenna #: | **2** | Antenna #: | **2** | Antenna #: | **2** |
| Make / Model: | RFS APXVAARR24_43-U-NA20 | Make / Model: | RFS APXVAARR24_43-U-NA20 | Make / Model: | RFS APXVAARR24_43-U-NA20 |
| Frequency Bands: | 2100 MHz / 600 MHz / 700 MHz | Frequency Bands: | 2100 MHz / 600 MHz / 700 MHz | Frequency Bands: | 2100 MHz / 600 MHz / 700 MHz |
| Gain: | 16.35 dBd / 12.95 dBd / 13.35 dBd | Gain: | 16.35 dBd / 12.95 dBd / 13.35 dBd | Gain: | 16.35 dBd / 12.95 dBd / 13.35 dBd |
| Height (AGL): | 108 feet | Height (AGL): | 108 feet | Height (AGL): | 108 feet |
| Channel Count: | 6 | Channel Count: | 6 | Channel Count: | 6 |
| Total TX Power (W): | 180 Watts | Total TX Power (W): | 180 Watts | Total TX Power (W): | 180 Watts |
| ERP (W): | 5,070.20 | ERP (W): | 5,070.20 | ERP (W): | 5,070.20 |
| Antenna A2 MPE %: | **2.57%** | Antenna B2 MPE %: | **2.57%** | Antenna C2 MPE %: | **2.57%** |

| Site Composite MPE % | |
|---|---|
| Carrier | MPE % |
| T-Mobile (Max at Sector A): | 6.52% |
| AT&T | 5.53% |
| Metro PCS | 2.41% |
| Verizon | 15.01% |
| **Site Total MPE % :** | 29.47% |

| T-Mobile MPE % Per Sector | |
|---|---|
| T-Mobile Sector A Total: | 6.52% |
| T-Mobile Sector B Total: | 6.52% |
| T-Mobile Sector C Total: | 6.52% |
| | |
| Site Total MPE % : | 29.47% |

## T-Mobile Maximum MPE Power Values (Sector A)

| T-Mobile Frequency Band / Technology (Sector A) | # Channels | Watts ERP (Per Channel) | Height (feet) | Total Power Density (μW/cm²) | Frequency (MHz) | Allowable MPE (μW/cm²) | Calculated % MPE |
|---|---|---|---|---|---|---|---|
| T-Mobile 1900 MHz GSM | 4 | 1028.30 | 108.0 | 12.68 | 1900 MHz GSM | 1000 | 1.27% |
| T-Mobile 1900 MHz LTE | 2 | 2056.61 | 108.0 | 12.68 | 1900 MHz LTE | 1000 | 1.27% |
| T-Mobile 2100 MHz LTE | 2 | 2307.55 | 108.0 | 14.22 | 2100 MHz LTE | 1000 | 1.42% |
| T-Mobile 2100 MHz UMTS | 2 | 1294.56 | 108.0 | 7.98 | 2100 MHz UMTS | 1000 | 0.80% |
| T-Mobile 600 MHz LTE | 2 | 591.73 | 108.0 | 3.65 | 600 MHz LTE | 400 | 0.91% |
| T-Mobile 700 MHz LTE | 2 | 648.82 | 108.0 | 4.00 | 700 MHz LTE | 467 | 0.86% |
| | | | | | | **Total:** | **6.52%** |

• NOTE: Totals may vary by approximately 0.01% due to summation of remainders in calculations.

## Summary

All calculations performed for this analysis yielded results that were **within** the allowable limits for general population exposure to RF Emissions.

The anticipated maximum composite contributions from the T-Mobile facility as well as the site composite emissions value with regards to compliance with FCC's allowable limits for general population exposure to RF Emissions are shown here:

| T-Mobile Sector | Power Density Value (%) |
|---|---|
| Sector A: | 6.52% |
| Sector B: | 6.52% |
| Sector C: | 6.52% |
| T-Mobile Maximum MPE % (Sector A): | 6.52% |
| | |
| Site Total: | 29.47% |
| | |
| Site Compliance Status: | **COMPLIANT** |

The anticipated composite MPE value for this site assuming all carriers present is **29.47%** of the allowable FCC established general population limit sampled at the ground level. This is based upon values listed in the Connecticut Siting Council database for existing carrier emissions.

FCC guidelines state that if a site is found to be out of compliance (over allowable thresholds), that carriers over a 5% contribution to the composite value will require measures to bring the site into compliance. For this facility, the composite values calculated were well within the allowable 100% threshold standard per the federal government.

# Exhibit G

## Mailing Receipts/Proof of Notice

**UPS Internet Shipping: View/Print Label**

1. **Ensure there are no other shipping or tracking labels attached to your package.** Select the Print button on the print dialog box that appears. Note: If your browser does not support this function select Print from the File menu to print the label.

2. **Fold the printed label at the solid line below.** Place the label in a UPS Shipping Pouch. If you do not have a pouch, affix the folded label using clear plastic shipping tape over the entire label.

3. **GETTING YOUR SHIPMENT TO UPS**
   **Customers with a Daily Pickup**
   Your driver will pickup your shipment(s) as usual.

   **Customers without a Daily Pickup**
   Take your package to any location of The UPS Store®, UPS Access Point(TM) location, UPS Drop Box, UPS Customer Center, Staples® or Authorized Shipping Outlet near you. Items sent via UPS Return Services(SM) (including via Ground) are also accepted at Drop Boxes. To find the location nearest you, please visit the 'Find Locations' Quick link at ups.com.
   Schedule a same day or future day Pickup to have a UPS driver pickup all of your Internet Shipping packages.
   Hand the package to any UPS driver in your area.

UPS Access Point™
THE UPS STORE
115 FRANKLIN TPKE
MAHWAH ,NJ 07430

UPS Access Point™
THE UPS STORE
120 E MAIN ST
RAMSEY ,NJ 07446

UPS Access Point™
POSTNET NY137
74 LAFAYETTE AVE
SUFFERN ,NY 10901

FOLD HERE

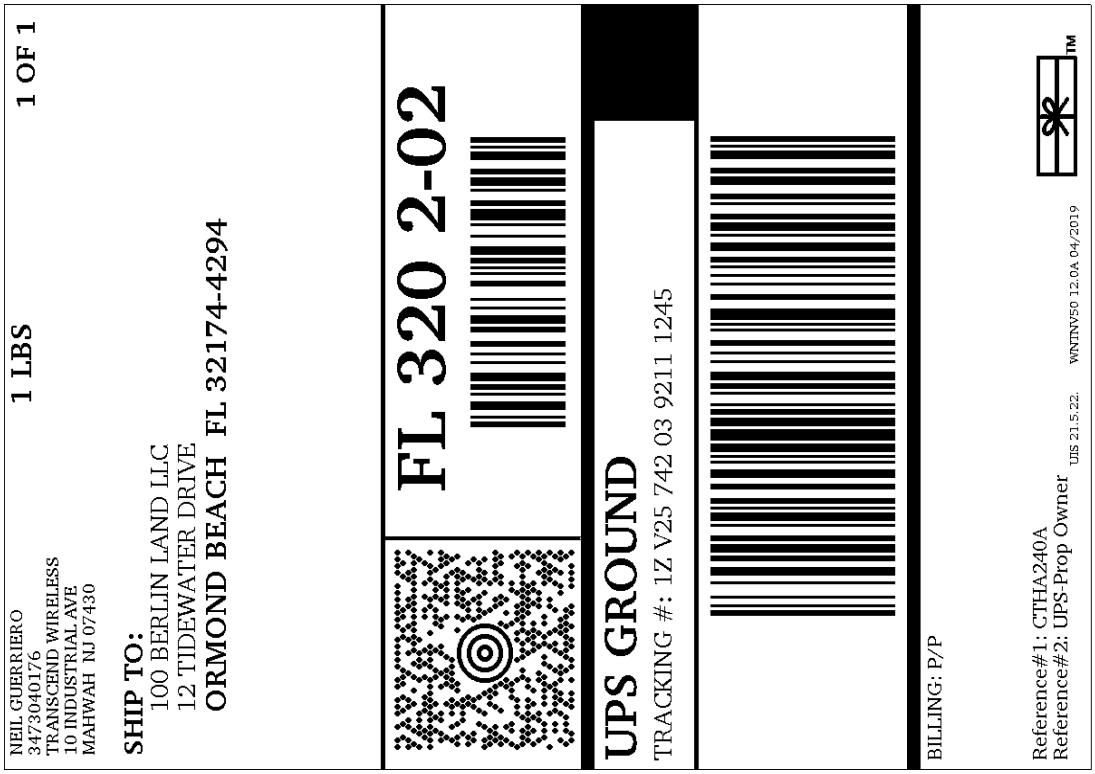

**UPS Internet Shipping: View/Print Label**

1. **Ensure there are no other shipping or tracking labels attached to your package.** Select the Print button on the print dialog box that appears. Note: If your browser does not support this function select Print from the File menu to print the label.

2. **Fold the printed label at the solid line below.** Place the label in a UPS Shipping Pouch. If you do not have a pouch, affix the folded label using clear plastic shipping tape over the entire label.

3. **GETTING YOUR SHIPMENT TO UPS**
   **Customers with a Daily Pickup**
   Your driver will pickup your shipment(s) as usual.

   **Customers without a Daily Pickup**
   Take your package to any location of The UPS Store®, UPS Access Point(TM) location, UPS Drop Box, UPS Customer Center, Staples® or Authorized Shipping Outlet near you. Items sent via UPS Return Services(SM) (including via Ground) are also accepted at Drop Boxes. To find the location nearest you, please visit the 'Find Locations' Quick link at ups.com.
   Schedule a same day or future day Pickup to have a UPS driver pickup all of your Internet Shipping packages.
   Hand the package to any UPS driver in your area.

UPS Access Point™
THE UPS STORE
115 FRANKLIN TPKE
MAHWAH ,NJ 07430

UPS Access Point™
THE UPS STORE
120 E MAIN ST
RAMSEY ,NJ 07446

UPS Access Point™
POSTNET NY137
74 LAFAYETTE AVE
SUFFERN ,NY 10901

FOLD HERE

**UPS Internet Shipping: View/Print Label**

1. **Ensure there are no other shipping or tracking labels attached to your package.** Select the Print button on the print dialog box that appears. Note: If your browser does not support this function select Print from the File menu to print the label.

2. **Fold the printed label at the solid line below.** Place the label in a UPS Shipping Pouch. If you do not have a pouch, affix the folded label using clear plastic shipping tape over the entire label.

3. **GETTING YOUR SHIPMENT TO UPS**
   **Customers with a Daily Pickup**
   Your driver will pickup your shipment(s) as usual.

   **Customers without a Daily Pickup**
   Take your package to any location of The UPS Store®, UPS Access Point(TM) location, UPS Drop Box, UPS Customer Center, Staples® or Authorized Shipping Outlet near you. Items sent via UPS Return Services(SM) (including via Ground) are also accepted at Drop Boxes. To find the location nearest you, please visit the 'Find Locations' Quick link at ups.com.
   Schedule a same day or future day Pickup to have a UPS driver pickup all of your Internet Shipping packages.
   Hand the package to any UPS driver in your area.

UPS Access Point™
THE UPS STORE
115 FRANKLIN TPKE
MAHWAH ,NJ 07430

UPS Access Point™
THE UPS STORE
120 E MAIN ST
RAMSEY ,NJ 07446

UPS Access Point™
POSTNET NY137
74 LAFAYETTE AVE
SUFFERN ,NY 10901

FOLD HERE

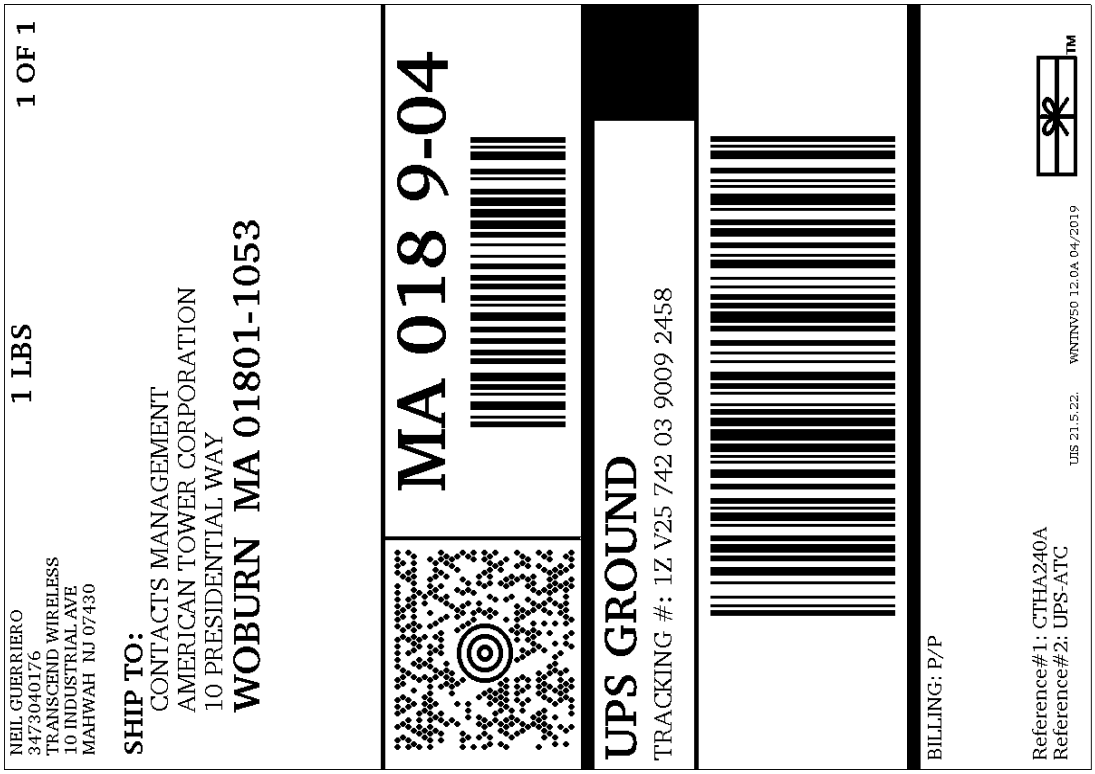

**UPS Internet Shipping: View/Print Label**

1. **Ensure there are no other shipping or tracking labels attached to your package.** Select the Print button on the print dialog box that appears. Note: If your browser does not support this function select Print from the File menu to print the label.

2. **Fold the printed label at the solid line below.** Place the label in a UPS Shipping Pouch. If you do not have a pouch, affix the folded label using clear plastic shipping tape over the entire label.

3. **GETTING YOUR SHIPMENT TO UPS**
   **Customers with a Daily Pickup**
   Your driver will pickup your shipment(s) as usual.

   **Customers without a Daily Pickup**
   Take your package to any location of The UPS Store®, UPS Access Point(TM) location, UPS Drop Box, UPS Customer Center, Staples® or Authorized Shipping Outlet near you. Items sent via UPS Return Services(SM) (including via Ground) are also accepted at Drop Boxes. To find the location nearest you, please visit the 'Find Locations' Quick link at ups.com.
   Schedule a same day or future day Pickup to have a UPS driver pickup all of your Internet Shipping packages.
   Hand the package to any UPS driver in your area.

UPS Access Point™
THE UPS STORE
115 FRANKLIN TPKE
MAHWAH ,NJ 07430

UPS Access Point™
THE UPS STORE
120 E MAIN ST
RAMSEY ,NJ 07446

UPS Access Point™
POSTNET NY137
74 LAFAYETTE AVE
SUFFERN ,NY 10901
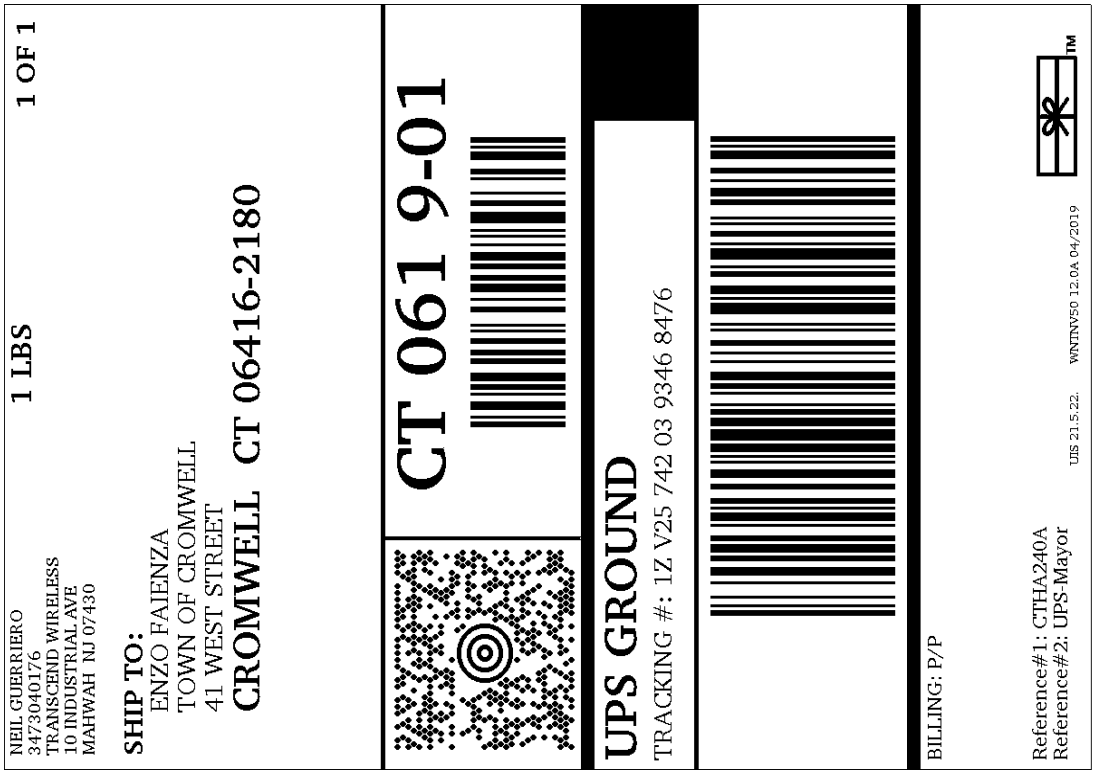
FOLD HERE