Robinson+Cole

KENNETH C. BALDWIN

280 Trumbull Street
Hartford, CT 06103-3597
Main (860) 275-8200
Fax (860) 275-8299
kbaldwin@rc.com
Direct (860) 275-8345

Also admitted in Massachusetts

November 16, 2015

Melanie A. Bachman
Acting Executive Director
Connecticut Siting Council
10 Franklin Square
New Britain, CT 06051

Re: **Notice of Exempt Modification – Facility Modification**
46 Meadow Road, Clinton, Connecticut

Dear Ms. Bachman:

Cellco Partnership d/b/a Verizon Wireless ("Cellco") currently maintains twelve (12) wireless telecommunications antennas at the 162-foot level of the existing 195-foot tower at 46 Meadow Road in Clinton, Connecticut (the "Property"). The tower is owned by SBA Communications Corporation ("SBA"). The Council approved Cellco's use of the tower in 2001. Cellco now intends to modify its facility by replacing six (6) of its existing antennas with three (3) model SBNHH-1D65B, 700/2100 MHz antennas and three (3) model SBNHH-1D65B, 1900 MHz antennas, all at the same level on the tower. Cellco also intends to install nine (9) remote radio heads ("RRHs") behind its antennas and two (2) HYBRIFLEX™ fiber optic antenna cables. Included in Attachment 1 are specifications for Cellco's replacement antennas, RRHs and HYBRIFLEX™ cables.

Please accept this letter as notification pursuant to R.C.S.A. § 16-50j-73, for construction that constitutes an exempt modification pursuant to R.C.S.A. § 16-50j-72(b)(2). In accordance with R.C.S.A. § 16-50j-73, a copy of this letter is being sent to William W. Fritz, First Selectman of the Town of Clinton. A copy of this letter is also being sent to Nichols Auto Parts Inc., the Property owner and SBA, the tower owner.

The planned modifications to the facility fall squarely within those activities explicitly provided for in R.C.S.A. § 16-50j-72(b)(2).

14280396-v1

Robinson+Cole

1. The proposed modifications will not result in an increase in the height of the existing tower. The replacement antennas and RRHs will be located at the 162-foot level on the 195-foot tower.

2. The proposed modifications will not involve any change to ground-mounted equipment and, therefore, will not require the extension of the site boundary.

3. The proposed modifications will not increase noise levels at the facility by six decibels or more, or to levels that exceed state and local criteria.

4. The operation of the modified facility will not increase radio frequency (RF) emissions at the facility to a level at or above the Federal Communications Commission (FCC) safety standard. A cumulative General Power Density table for Cellco's modified facility is included behind Attachment 2.

5. The proposed modifications will not cause a change or alteration in the physical or environmental characteristics of the site.

6. The tower and its foundation with certain modifications can support Cellco's proposed modifications. (*See* Structural Modification Analysis included in Attachment 3).

For the foregoing reasons, Cellco respectfully submits that the proposed modifications to the above-referenced telecommunications facility constitutes an exempt modification under R.C.S.A. § 16-50j-72(b)(2).

Sincerely,

Kenneth C. Baldwin

Enclosures
Copy to:
William W. Fritz, Clinton First Selectman
Nichols Auto Parts Inc.
SBA
Tim Parks

ATTACHMENT 1

Product Specifications

COMMSCOPE®

POWERED BY ANDREW.

SBNHH-1D65B

Andrew® Tri-band Antenna, 698–896 and 2x 1695–2360 MHz, 65° horizontal beamwidth, internal RET. Both high bands share the same electrical tilt.

- Interleaved dipole technology providing for attractive, low wind load mechanical package

Electrical Specifications

Frequency Band, MHz	698–806	806–896	1695–1880	1850–1990	1920–2200	2300–2360
Gain, dBi	14.9	14.7	17.7	18.2	18.6	18.6
Beamwidth, Horizontal, degrees	68	66	69	66	63	58
Beamwidth, Vertical, degrees	12.1	10.7	5.6	5.2	5.0	4.5
Beam Tilt, degrees	0–14	0–14	0–7	0–7	0–7	0–7
USLS (First Lobe), dB	14	13	15	15	15	13
Front-to-Back Ratio at 180°, dB	27	29	28	28	28	27
CPR at Boresight, dB	20	23	20	20	17	21
CPR at Sector, dB	14	10	12	10	9	1
Isolation, dB	25	25	25	25	25	25
Isolation, Intersystem, dB	30	30	30	30	30	30
VSWR | Return Loss, dB	1.5 | 14.0	1.5 | 14.0	1.5 | 14.0	1.5 | 14.0	1.5 | 14.0	1.5 | 14.0
PIM, 3rd Order, 2 x 20 W, dBc	-153	-153	-153	-153	-153	-153
Input Power per Port, maximum, watts	350	350	350	350	350	300
Polarization	±45°	±45°	±45°	±45°	±45°	±45°
Impedance	50 ohm	50 ohm	50 ohm	50 ohm	50 ohm	50 ohm

Electrical Specifications, BASTA*

Frequency Band, MHz	698–806	806–896	1695–1880	1850–1990	1920–2200	2300–2360
Gain by all Beam Tilts, average, dBi	14.5	14.3	17.4	17.9	18.2	18.3
Gain by all Beam Tilts Tolerance, dB	±0.5	±0.8	±0.4	±0.3	±0.5	±0.3
Gain by Beam Tilt, average, dBi	0 ° | 14.6	0 ° | 14.5	0 ° | 17.4	0 ° | 17.8	0 ° | 18.1	0 ° | 18.2
	7 ° | 14.6	7 ° | 14.4	3 ° | 17.5	3 ° | 17.9	3 ° | 18.3	3 ° | 18.4
	14 ° | 14.2	14 ° | 13.6	7 ° | 17.4	7 ° | 17.9	7 ° | 18.2	7 ° | 18.4
Beamwidth, Horizontal Tolerance, degrees	±2.2	±3.4	±2	±4.6	±5.7	±4.3
Beamwidth, Vertical Tolerance, degrees	±0.8	±1	±0.3	±0.2	±0.3	±0.2
USLS, beampeak to 20° above beampeak, dB	16	14	16	16	16	15
Front-to-Back Total Power at 180° ± 30°, dB	25	26	27	26	26	26
CPR at Boresight, dB	22	23	21	20	20	22
CPR at Sector, dB	13	11	16	12	11	4

* CommScope® supports NGMN recommendations on Base Station Antenna Standards (BASTA). To learn more about the benefits of BASTA, download the whitepaper Time to Raise the Bar on BSAs.

General Specifications

Antenna Brand	Andrew®
Antenna Type	DualPol® multiband with internal RET
Band	Multiband
Brand	DualPol® | Teletilt®
Operating Frequency Band	1695 – 2360 MHz | 698 – 896 MHz
Performance Note	Outdoor usage

©2015 CommScope, Inc. All rights reserved. All trademarks identified by ® or ™ are registered trademarks, respectively, of CommScope.
All specifications are subject to change without notice. See www.commscope.com for the most current information. Revised: October 13, 2015

Product Specifications

COMMSCOPE®

SBNHH-1D65B

POWERED BY ANDREW.

Mechanical Specifications

Color	Light gray
Lightning Protection	dc Ground
Radiator Material	Aluminum | Low loss circuit board
Radome Material	Fiberglass, UV resistant
Reflector Material	Aluminum
RF Connector Interface	7-16 DIN Female
RF Connector Location	Bottom
RF Connector Quantity, total	6
Wind Loading, maximum	617.7 N @ 150 km/h 138.9 lbf @ 150 km/h
Wind Speed, maximum	241 km/h | 150 mph

Dimensions

Depth	180.0 mm | 7.1 in
Length	1851.0 mm | 72.9 in
Width	301.0 mm | 11.9 in
Net Weight	18.4 kg | 40.6 lb

Remote Electrical Tilt (RET) Information

Input Voltage	10–30 Vdc
Power Consumption, idle state, maximum	2.0 W
Power Consumption, normal conditions, maximum	13.0 W
Protocol	3GPP/AISG 2.0 (Multi-RET)
RET Interface	8-pin DIN Female | 8-pin DIN Male
RET Interface, quantity	1 female | 1 male
RET System	Teletilt®

Packed Dimensions

Depth	299.0 mm | 11.8 in
Length	1970.0 mm | 77.6 in
Width	409.0 mm | 16.1 in
Shipping Weight	31.0 kg | 68.3 lb

Regulatory Compliance/Certifications

Agency	Classification
RoHS 2011/65/EU	Compliant by Exemption
China RoHS SJ/T 11364-2006	Above Maximum Concentration Value (MCV)
ISO 9001:2008	Designed, manufactured and/or distributed under this quality management system

Included Products

©2015 CommScope, Inc. All rights reserved. All trademarks identified by ® or ™ are registered trademarks, respectively, of CommScope.
All specifications are subject to change without notice. See www.commscope.com for the most current information. Revised: October 13, 2015

Product Specifications

SBNHH-1D65B

BSAMNT-1 — Wide Profile Antenna Downtilt Mounting Kit for 2.4 - 4.5 in (60 - 115 mm) OD round members. Kit contains one scissor top bracket set and one bottom bracket set.

* Footnotes

Performance Note	Severe environmental conditions may degrade optimum performance

©2015 CommScope, Inc. All rights reserved. All trademarks identified by ® or ™ are registered trademarks, respectively, of CommScope.
All specifications are subject to change without notice. See www.commscope.com for the most current information. Revised: October 13, 2015

ALCATEL-LUCENT B13 RRH4X30-4R

Alcatel-Lucent B13 Remote Radio Head 4x30-4R is the newest addition of Remote Radio Head to the extended product line of Alcatel-Lucent's distributed Base Station solutions, aimed at facilitating smooth RF site acquisition and related civil engineering.

Supporting 2Tx/4Tx MIMO and 4-way Rx diversity, Alcatel-Lucent B13 RRH4x30-4R allows operators to have a compact radio solution to deploy LTE in the 700U band (700 MHz, 3GPP band 13), providing them with the means to achieve high capacity, high quality and high coverage with minimum site requirements.

The Alcatel-Lucent B13 RRH4x30-4R product has four transmit RF paths, offering the possibility to **select, via software only, 2Tx or 4Tx MIMO configurations** with either 2x60 W or 4x30 W RF output power. It supports also 4-way Rx diversity and up to 10MHz instantaneous bandwidth.

The Alcatel-Lucent B13 RRH4x30-4R is a near zero-footprint solution and operates noise free, simplifying negotiations with site property owners and minimizing environmental impacts.

Its compactness and slim design makes the Alcatel-Lucent B13 RRH4x30-4R easy to install close to the antenna: operators can therefore locate this Remote Radio Head where RF design conditions are deemed ideal, minimizing trade-offs between available sites and RF optimum sites, together with reducing the RF feeder needs and installation costs.

FEATURES

- Supporting LTE in 700 MHz band (700U, 3GPP band 13)
- LTE 2Tx or 4Tx MIMO (SW switchable)
- Output power: Up to 2x60W or 4x30W
- 10MHz LTE carrier with 4Rx Diversity
- Convection-cooled (fan-less)
- Supports AISG 2.0 ALD devices (RET, TMA) through RS485 or RF ports

BENEFITS

- Compact to reduce additional footprint when adding LTE in 700U band
- MIMO scheme operation selection (2Tx or 4Tx) by software only
- Improves downlink spectral efficiency through MIMO4
- Increases LTE coverage thanks to 4Rx diversity capability and best in class Rx sensitivity
- Flexible mounting options: Pole or Wall

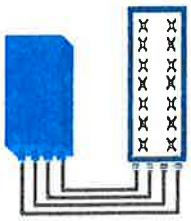

4x30W with 4T4R
or
2x60W with 2T4R

Can be switched between modes via SW w/o site visit

Features & performance	
Number of TX/RX paths	4 duplexed (either 4T4R or 2T4R by SW)
Frequency band	U700 (C) (3GPP bands 13): DL: 746 - 756 MHz / UL: 777 - 787 MHz
Instantaneous bandwidth - #carriers	10MHz – 1 LTE carrier (in 10MHz occupied bandwidth)
LTE carrier bandwidth	10 MHz
RF output power	2x60W or 4x30W (by SW)
Noise figure – RX Diversity scheme	2 dB typ. (<2.5 dB max) – 2 or 4 way Rx diversity
Sizes (HxWxD) in mm (in.) Volume in L Weight in kg (lb) (w/o mounting HW)	550 x 305 x 230 (21.6" x 12.0" x 9") (with solar shield) 38 (with solar shield) 26 (57.2) (with solar shield)
DC voltage range DC power consumption	-40.5 to -57V at full performance, -38 to -57V with relaxation on power consumption 550W typical @100% RF load (in 2Tx or 4TX mode)
Environmental conditions Wind load (@150km/h or 93mph)	-40°C (-40°F) /+55°C (+131°F) IP65 Frontal:<200N / Lateral :<150N
Antenna ports	4 ports 7/16 DIN female (50 ohms) VSWR < 1.5
CPRI ports	2 CPRI ports (HW ready for Rate7, 9.8 Gbps) SFP single mode dual fiber
AISG Interfaces	1 AISG2.0 output (RS485) Integrated Smart Bias Tees (x2)
Misc. Interfaces	4 external alarms (1 connector) – 4 RF Tx & 4 RF Rx monitor ports - 1 DC connector (2 pins)
Installation conditions	Pole and wall mounting
Regulatory compliance	3GPP 36.141 / 3GPP 36.113 / GR-1089-CORE / GR-3108-CORE / UL 60950-1 / FCC Part 27

www.alcatel-lucent.com Alcatel, Lucent, Alcatel-Lucent and the Alcatel-Lucent logo are trademarks of Alcatel-Lucent. All other trademarks are the property of their respective owners. The information presented is subject to change without notice. Alcatel-Lucent assumes no responsibility for inaccuracies contained herein.
Copyright © 2014 Alcatel-Lucent. All Rights Reserved

PCS RF MODULES

RRH1900 2X60 - HW CHARACTERISTICS

LA6.0.1/13.3

		RRH2x60
RF Output Power		2x60W
Instantaneous Bandwidth		20MHz
Transmitter		2 TX
Receiver	1900 HW version 1900A HW version	2 Branch RX – LA6.0.1 4 Branch RX – LR13.3
Features		AISG 2.0 for RET/TMA
		Internal Smart Bias-T
Power		-48VDC
CPRI Ports		2 CPRI Rate 3 Ports
External Alarms		4 External User Alarms
Monitor Ports		TX
Environmental		GR487 Compliance
RF Connectors		7/16 DIN (top mounted)

** Not a Verizon Wireless deployed product

COPYRIGHT © 2014 ALCATEL-LUCENT. ALL RIGHTS RESERVED.
ALCATEL-LUCENT – CONFIDENTIAL – SOLELY FOR AUTHORIZED PERSONS HAVING A NEED TO KNOW – PROPRIETARY – USE PURSUANT TO COMPANY INSTRUCTION

Alcatel·Lucent

NEW PCS RF MODULES FOR VZW

RRH2X60 - HW CHARACTERISTICS

LR14.3

	RRH2x60
RF Output Power	2x60W (4x30W HW Ready)
Instantaneous Bandwidth	60MHz
Target Reliability (Annual Return Rate)	<2%
Receiver	4 Branch Rx
Features	AISG 2.0 for RET/TMA
Power	-48VDC
	Internal Smart Bias-T
CPRI Ports	2 CPRI Rate 5 Ports
External Alarms	4 External User Alarms
Monitor Ports	TX, RX
Environmental	GR487 Compliance
RF Connectors	7/16 DIN (downward facing)
Dimensions	22"(h) x 12"(w)x 9.4" (d)**
Weight	55lb**

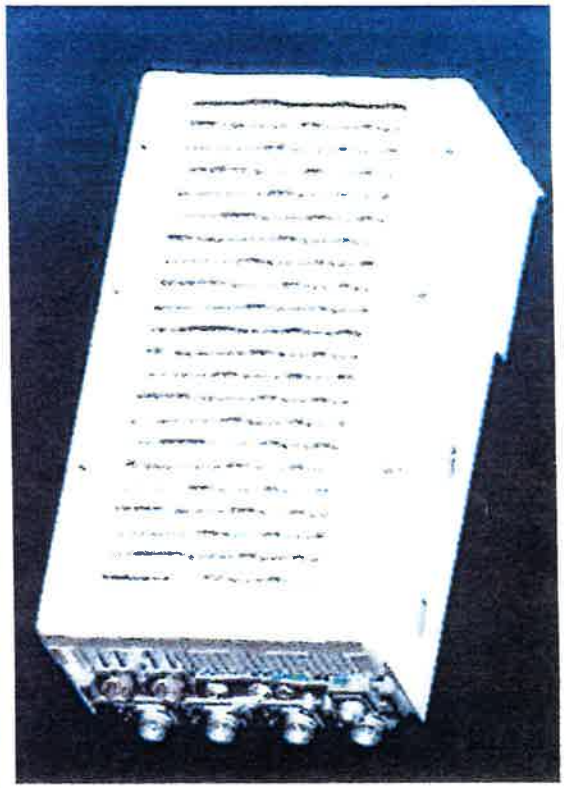

**- Includes solar shield but not mounting brackets (8 lbs.)

COPYRIGHT © 2014 ALCATEL-LUCENT. ALL RIGHTS RESERVED.
ALCATEL-LUCENT – CONFIDENTIAL – SOLELY FOR AUTHORIZED PERSONS HAVING A NEED TO KNOW – PROPRIETARY – USE PURSUANT TO COMPANY INSTRUCTION

ALCATEL-LUCENT
WIRELESS PRODUCT DATASHEET
RRH2X60-AWS FOR BAND 4 APPLICATIONS

The Alcatel-Lucent RRH2x60-AWS is a high power, small form factor Remote Radio Head operating in the AWS frequency band (3GPP Band 4) for LTE technology. It is designed with an eco-efficient approach, providing operators with the means to achieve high quality and high capacity coverage with minimum site requirements and efficient operation.

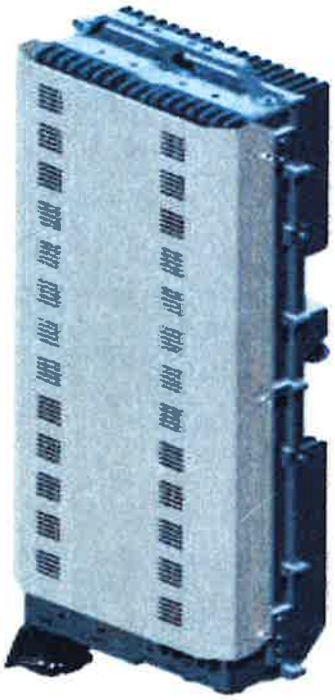

A distributed Node B expands the deployment options by using two components, a Base Band Unit (BBU) containing the digital assets and a separate RRH containing the radio-frequency (RF) elements. This modular design optimizes available space and allows the main components of a Node B to be installed separately, within the same site or several kilometers apart.

The Alcatel-Lucent RRH2x60-AWS is linked to the BBU by an optical-fiber connection carrying downlink and uplink digital radio signals along with operations, administration and maintenance (OA&M) information.

SUPERIOR RF PERFORMANCE

The Alcatel-Lucent RRH2x60-AWS integrates all the latest technologies. This allows to offer best-in-class characteristics.

It delivers an outstanding 120 watts of total RF power thanks to its two transmit RF paths of 60 W each.

It is ideally suited to support multiple-input multiple-output (MIMO) 2x2 operation.

It includes four RF receivers to natively support 4-way uplink reception diversity. This improves the radio uplink coverage and this can be used to extend the cell radius commensurate with 2x2MIMO 2x60 W for the downlink.

It supports multiple discontinuous LTE carriers within an instantaneous bandwidth of 45 MHz corresponding to the entire AWS B4 spectrum.

The latest generation power amplifiers (PA) used in this product achieve high efficiency (>40%), resulting in improved power consumption figures.

OPTIMIZED TCO

The Alcatel-Lucent RRH2x60-AWS is designed to make available all the benefits of a distributed Node B, with excellent RF characteristics, with low capital expenditures (CAPEX) and low operating expenditures (OPEX).

The Alcatel-Lucent RRH2x60-AWS is a very cost-effective solution to deploy LTE MIMO.

EASY INSTALLATION

The RRH2x60-AWS includes a reversible mounting bracket which allows for ease of installation behind an antenna, or on a rooftop knee wall while providing easy access to the mid body RF connectors.

The limited space available in some sites may prevent the installation of traditional single-cabinet BTS equipment. However, many of these sites can host an Alcatel-Lucent RRH2x60-AWS installation, providing more flexible site selection and improved network quality along with greatly reduced installation time and costs.

The Alcatel-Lucent RRH2x60-AWS is a zero-footprint solution and is convection cooled without fans for silent operation, simplifying negotiations with site property owners and minimizing environmental impacts.

Installation can easily be done by a single person as the Alcatel–Lucent RRH2x60-AWS is compact and weighs about 20 kg, eliminating the need for a crane to hoist the BTS cabinet to the rooftop. A site can be in operation in less than one day.

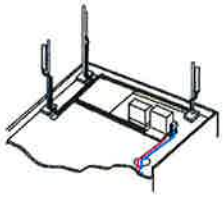

Macro

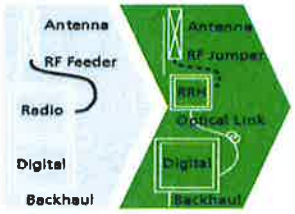

RRH for space-constrained cell sites

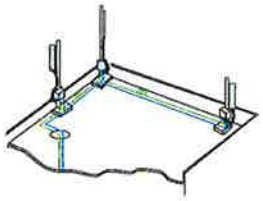

Distributed

FEATURES

- RRH2x60-AWS integrates two power amplifiers of 60W rating (at each antenna connector)
- Support multiple carriers over the entire 3GPP band 4
- RRH2x60-AWS is optimized for LTE operation
- RRH2x60-AWS is a very compact and lightweight product
- Advanced power management techniques are embedded to provide power savings, such as PA bias control

BENEFITS

- MIMO LTE operation with only one single unit per sector
- Improved uplink coverage with built-in 4-way receive diversity capability
- RRH can be mounted close to the antenna, eliminating nearly all losses in RF cables and thus reducing power consumption by 50% compared to conventional solutions
- Distributed configurations provide easily deployable and cost-effective solutions, near zero footprint and silent solutions, with minimum impact on the neighborhood, which ease the deployment
- RETA and TMA support without additional hardware thanks to the AISG v2.0 port and the integrated Bias-Tees. Bias-Tees support AISG DC supply and signaling.

TECHNICAL SPECIFICATIONS

Specifications listed are hardware capabilities. Some capabilities depend on support in a specific software release or future release.

Dimensions and weights

- HxWxD : 510x285x186mm (27 l with solar shield)
- Weight : 20 kg (44 lbs)

Electrical Data

- Power Supply : -48V DC (-40.5 to -57V)
- Power Consumption (ETSI average traffic load reference) : 250W @2x60W

RF Characteristics

- Frequency band: 1710-1755, UL / 2110-2155 MHz, DL (3GPP band 4)
- Output power: 2x60W at antenna connectors
- Technology supported: LTE
- Instantaneous bandwidth: 45 MHz
- Rx diversity: 2-way and 4-way uplink reception
- Typical sensitivity without Rx diversity: -105 dBm for LTE

Connectivity

- Two CPRI optical ports for daisychaining and up to six RRHs per fiber
- Type of optical fiber: Single-Mode (SM) and Multi-Mode (MM) SFPs
- Optical fiber length: up to 500m using MM fiber, up to 20km using SM fiber
- TMA/RETA : AISG 2.0 (RS485 connector and internal Bias-Tee)
- Six external alarms
- Surge protection for all external ports (DC and RF)

Environmental specifications

- Operating temperature: -40°C to 55°C including solar load
- Operating relative humidity: 8% to 100%
- Environmental Conditions : ETS 300 019-1-4 class 4.1E
- Ingress Protection : IEC 60529 IP65
- Acoustic Noise : Noiseless (natural convection cooling)

Safety and Regulatory Data

- EMC : 3GPP 25113, EN 301 489-1, EN 301 489-23, GR 1089, GR 3108, OET-65
- Safety : IEC60950-1, EN 60825-1, UL, ANSI/NFPA 70, CAN/CSA-C22.2
- Regulatory : FCC Part 15 Class B, CE Mark – European Directive : 2002/95/EC (ROHS); 2002/96/EC (WEEE); 1999/5/EC (R&TTE)
- Health : EN 50385

www.alcatel-lucent.com Alcatel, Lucent, Alcatel-Lucent and the Alcatel-Lucent logo are trademarks of Alcatel-Lucent. All other trademarks are the property of their respective owners. The information presented is subject to change without notice.
Alcatel-Lucent assumes no responsibility for inaccuracies contained herein.

Copyright © 2012 Alcatel-Lucent. All rights reserved. M2012XXXXXX (March)

Alcatel·Lucent

AT THE SPEED OF IDEAS™

Product Data Sheet HB158-1-08U8-S8J18

HYBRIFLEX™ RRH Hybrid Feeder Cabling Solution, 1-5/8", Single-Mode Fiber

Product Description

RFS' HYBRIFLEX Remote Radio Head (RRH) hybrid feeder cabling solution combines optical fiber and DC power for RRHs in a single lightweight aluminum corrugated cable, making it the world's most innovative solution for RRH deployments.

It was developed to reduce installation complexity and costs at Cellular sites. HYBRIFLEX allows mobile operators deploying an RRH architecture to standardize the RRH installation process and eliminate the need for and cost of cable grounding. HYBRIFLEX combines optical fiber (multi-mode or single-mode) and power in a single corrugated cable. It eliminates the need for junction boxes and can connect multiple RRHs with a single feeder. Standard RFS CELLFLEX® accessories can be used with HYBRIFLEX cable. Both pre-connectorized and on-site options are available.

Figure 1: HYBRIFLEX Series

Features/Benefits

- Aluminum corrugated armor with outstanding bending characteristics – minimizes installation time and enables mechanical protection and shielding
- Same accessories as 1 5/8" coaxial cable
- Outer conductor grounding – Eliminates typical grounding requirements and saves on installation costs
- Lightweight solution and compact design – Decreases tower loading
- Robust cabling – Eliminates need for expensive cable trays and ducts
- Installation of tight bundled fiber optic cable pairs directly to the RRH – Reduces CAPEX and wind load by eliminating need for interconnection
- Optical fiber and power cables housed in single corrugated cable – Saves CAPEX by standardizing RRH cable installation and reducing installation requirements
- Outdoor polyethylene jacket – Ensures long-lasting cable protection

Technical Specifications

Outer Conductor Armor	Corrugated Aluminum	[mm (in)]	46.5 (1.83)
Jacket:	Polyethylene, PE	[mm (in)]	50.3 (1.98)
UV-Protection	Individual and External Jacket		Yes
Weight, Approximate		[kg/m (lb/ft)]	1.9 (1.30)
Minimum Bending Radius, Single Bending		[mm (in)]	200 (8)
Minimum Bending Radius, Repeated Bending		[mm (in)]	500 (20)
Recommended/Maximum Clamp Spacing		[m (ft)]	1.0 / 1.2 (3.25 / 4.0)
DC-Resistance Outer Conductor Armor		[Ω/km (Ω/1000ft)]	.068 (0.205)
DC-Resistance Power Cable, 8.4mm² (8AWG)		[Ω/km (Ω/1000ft)]	2.1 (0.307)
Version			Single-mode OM3
Quantity, Fiber Count			16 (8 pairs)
Core/Clad		[µm]	50/125
Primary Coating (Acrylate)		[µm]	245
Buffer Diameter, Nominal		[µm]	900
Secondary Protection, Jacket, Nominal		[mm (in)]	2.0 (0.08)
Minimum Bending Radius		[mm (in)]	104 (4.1)
Insertion Loss @ wavelength 850nm		dB/km	3.0
Insertion Loss @ wavelength 1310nm		dB/km	1.0
Standards (Meets or exceeds)			UL94-V0, UL1666 RoHS Compliant
Size (Power)		[mm (AWG)]	8.4 (8)
Quantity, Wire Count (Power)			16 (8 pairs)
Size (Alarm)		[mm (AWG)]	0.8 (18)
Quantity, Wire Count (Alarm)			4 (2 pairs)
Type			UV protected
Strands			19
Primary Jacket Diameter, Nominal		[mm (in)]	6.8 (0.27)
Standards (Meets or exceeds)			NFPA 130, ICEA S-95-658 UL Type XHHW-2, UL 44 UL-LS Limited Smoke, UL VW-1 IEEE-383 (1974), IEEE1202/FT4 RoHS Compliant
Installation Temperature		[°C (°F)]	-40 to +65 (-40 to149)
Operation Temperature		[°C (°F)]	-40 to +65 (-40 to149)

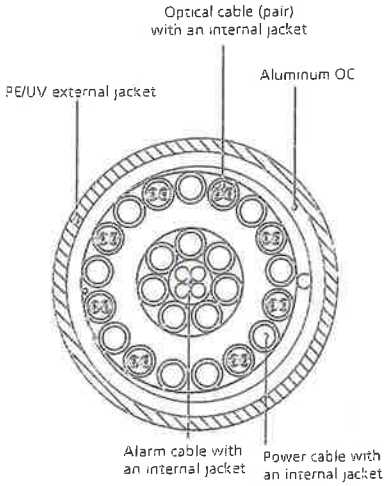

Figure 2: Construction Detail

* This data is provisional and subject to change

All information contained in the present datasheet is subject to confirmation at time of ordering.

ATTACHMENT 2

	General	Power	Density					
Site Name: Clinton S								
Tower Height: 195'								
CARRIER	**# OF CHAN.**	**WATTS ERP**	**HEIGHT**	**CALC. POWER DENS**	**FREQ.**	**MAX. PERMISS. EXP.**	**FRACTION MPE**	**Total**
*Sprint CDMA/LTE	3	693	182	0.0241	1900	1.0000	0.24%	
*Sprint CDMA/LTE	1	390	182	0.0045	850	0.5667	0.08%	
*Sprint CDMA/LTE	2	693	182	0.0161	2500	1.0000	0.16%	
*T-Mobile GSM/UMTS	2	12	192.5	0.0002	1950	1.0000	0.00%	
*T-Mobile UMTS	2	12	192.5	0.0002	2100	1.0000	0.00%	
*T-Mobile LTE	2	24	192.5	0.0005	2100	1.0000	0.00%	
*AT&T UMTS	1	500	150	0.0087	880	0.5867	0.15%	
*AT&T GSM	2	296	150	0.0103	880	0.5867	0.18%	
*AT&T GSM	2	427	150	0.0148	1900	1.0000	0.15%	
*AT&T LTE	1	500	150	0.0087	740	0.4933	0.18%	
Verizon	**11**	**372**	**162**	**0.0561**	**1970**	**1.0000**	**5.61%**	
Verizon	**9**	**379**	**162**	**0.0467**	**869**	**0.5793**	**8.07%**	
Verizon	**1**	**2306**	**162**	**0.0316**	**2145**	**1.0000**	**3.16%**	
Verizon	**1**	**1050**	**162**	**0.0144**	**746**	**0.4973**	**2.89%**	
								20.9%
* Source: Siting Council								

ATTACHMENT 3

FDH VELOCITEL

ENGINEERING INNOVATION

Velocitel, Inc., d.b.a. FDH Velocitel, 6521 Meridien Drive Raleigh, NC 27616, Ph. 919.755.1012

Structural Modification Analysis for SBA Network Services, Inc.

195' Self-Support Tower

SBA Site Name: Clinton 4 CT
SBA Site ID: CT01879-S-02
Verizon Site Name: Clinton South
Site Address: 46 Meadow Road Clinton, CT 06413

FDH Project Number 15BZTJ1400

Analysis Results

Tower Components	99.7%	Sufficient
Foundation	57.9%	Sufficient

Prepared By:

Brian Apple

Brian Apple, EI
Project Engineer I

Reviewed By:

Dennis D. Abel, PE
Director of Structural Engineering
NY License No. 084835-1
Velocitel Engineering Services, PLLC 048974

STATE OF NEW YORK
DENNIS DANIEL ABEL
084835-1
LICENSED PROFESSIONAL ENGINEER

Velocitel Engineering Services, LLC
6521 Meridien Drive
Raleigh, NC, 27616
(919) 755-1012

September 24, 2015

09-24-2015

Prepared pursuant to the TIA/EIA-222-F Structural Standards for Steel Antenna Towers and Antenna Supporting Structures and 2005 Connecticut Building Code

TABLE OF CONTENTS

EXECUTIVE SUMMARY 3
Conclusions 3
Recommendations 3
APPURTENANCE LISTING 4
RESULTS 5
GENERAL COMMENTS 6
LIMITATIONS 6
APPENDIX 7

EXECUTIVE SUMMARY

At the request of SBA Network Services, Inc., FDH Velocitel performed a structural analysis of the existing self-supported tower located in Clinton, CT to determine whether the tower is structurally adequate to support the antenna configuration in place per **Table 1** pursuant to the *Structural Standards for Steel Antenna Towers and Antenna Supporting Structures, TIA/EIA-222-F* and the *2005 Connecticut State Building Code (CSBC)*. Information pertaining to the antenna loading, current tower geometry, member sizes, and below grade parameters was obtained from:

Source	Document Type	Reference	Date
Sabre Communications Corp.	Tower & Foundation Drawings	Job No. 00-10101	November 19, 1999
Jaworski Geotech, Inc.	Geotechnical Report	Job No. 99500G	December 13, 1999
FDH Engineering, Inc.	Modification Drawings	Project No. 1465YH1400	June 3, 2014
FDH Engineering, Inc.	Modification Inspection	Project No. 1466SS1400	February 13, 2015
FDH Engineering, Inc.	TIA Inspection	Project No. 1466SS1400	February 13, 2015
FDH Velocitel	Modification Drawings	Project No. 15BZTJ1400	September 24, 2015
SBA Network Services, Inc.	-	-	-

The *basic design wind speed* per the *TIA/EIA-222-F* standards and the *2005 CSBC* is 85 mph without ice and 38 mph with 3/4" radial ice. Ice is considered to increase in thickness with height.

Conclusions

With the antenna configuration in place per **Table 1** we have determined the tower stress level to be sufficient and the foundation(s) to be sufficient pursuant to the requirements stipulated by *Structural Standards for Steel Antenna Towers and Antenna Supporting Structures, TIA/EIA-222-F* and the *2005 CSBC* provided the **Recommendations** listed below are satisfied. For a more detailed description of the analysis of the tower, see the **Results** section of this report.

Our structural analysis has been performed assuming all information provided to FDH Velocitel is accurate (i.e., the structure member information, tower layout, existing antenna loading, and proposed antenna loading) and that the tower has been properly erected and maintained per the original design drawings.

Recommendations

To ensure the requirements of the current analysis standards are met with the antenna configuration in place per **Table 1**, we have the following recommendations:

1. Feed lines must be installed as shown in **Figure 1**.
2. RRH/RRU Stipulation: The proposed equipment may be installed in any arrangement as determined by the client.
3. The modifications listed in FDH Velocitel (Project No. 15BZTJ1400) Modification Drawings for a 195' Self-Support Tower dated September 24, 2015 must be installed as specified.

APPURTENANCE LISTING

The antennas and equipment, with their corresponding feed lines, considered for this analysis are shown in **Table 1**. *If the actual layout determined in the field deviates from the layout, FDH Velocitel should be contacted to perform a revised analysis.*

Table 1 - Appurtenance Loading

Existing Loading:

Antenna Elevation (ft)	Description	Feed Lines	Carrier	Mount Elevation (ft)	Mount Type
194	(3) Ericsson AIR B2A/B4P (3) Ericsson AIR B4A/B2P	(12) 1-5/8" (1) 1-5/8" Fiber	T-Mobile	192	(3) 13' T-Frames
193.5	(3) Ericsson KRY 112 144/1				
185	(1) Celwave PD1151	(1) 7/8"	Town of Clinton	178	Direct Mount
180	(3) RFS APXVTM14-C-I20 (3) Alcatel Lucent TD-RRH8x20-25 (3) RFS APXVSPP18-C-A20	(3) 1-1/4" Fiber	Sprint	178.5	(3) Pipe Mounts
177	(3) ALU 1900 MHZ RRUs			175	(3) 12' T-Frames
173.5	(3) ALU 800 MHZ RRUs (3) ALU 800 MHZ Filters (4) RFS ACU-A20-N				
162	(3) Antel BXA-70063/6CF (4) Antel LPA-80063/4CF (2) Antel BXA-171063/8BF (1) Antel BXA-171063/12CF (2) Antel LPA-80063/6CF (6) RFS FD9R6004/2C-3L	(12) 1-5/8"	Verizon	161	(3) 12' T-Frames
151.5	(1) Raycap DC6-48-60-18-8F	(12) 1-5/8" (1) 3" Rigid Conduit	AT&T	150.5	(3) 12' T-Frames
150.5	(9) KMW AM-X-CD-14-65-00T (3) Powerwave 7770 (6) Powerwave TT19-08BP111-001 (3) Powerwave LGP13519 (3) CSS DBC-750 (6) Ericsson RRUS-11			150	
141.5	(3) Sinclair SD312HL	(3) 7/8"	Town of Clinton	138	(3) 4' Standoffs
102	(1) Radiowaves RDH4518A	(2) CAT 5e		101	(1) Pipe Mount

Proposed Carrier Final Loading:

Antenna Elevation (ft.)	Description	Feed Lines	Carrier	Mount Elevation (ft.)	Mount Type
162.5	(2) Antel LPA-80063/6CF	(10) 1-5/8" (2) 1-5/8" Fiber	Verizon	161	(3) 12' T-Frames
162	(4) Antel LPA-80063/4CF (6) Commscope SBNHH-1D65B (3) Alcatel Lucent RRH2X60-AWS (3) Alcatel Lucent RRH2X60-PCS (3) Alcatel Lucent RRH2x60-700 (6) RFS FD9R6004/2C-3L (2) RFS DB-T1-6Z-8AB-0Z				

RESULTS

The following material grades for individual members were used for analysis:

Table 2 - Material Grade

Member Type	Material Grade
Legs	50 ksi
Bracing	36 ksi

Table 3 and **Table 4** display the summary of capacities for the analyzed structure and its additional components. Values greater than 100% indicate locations where the maximum force in the member exceeds its capacity. *Note: Capacities up to 105% are considered acceptable (except foundation soil interaction, up to 110% is considered acceptable).*

If the assumptions outlined in this report differ from actual field conditions, FDH Velocitel should be contacted to perform a revised analysis. Furthermore, as no information pertaining to the allowable twist and sway requirements for the appurtenances was provided, deflection and rotation were not taken into consideration when performing this analysis.

See the **Appendix** for detailed modeling information.

Table 3 - Structure Member Capacities

Section No.	Elevation (ft.)	Component Type	Size	% Capacity	Pass / Fail
T1	195 - 180	Leg	P2x.154 (2.38 OD)	31.5	Pass
T2	180 - 160	Leg	P3x.216 (3.5 OD)	51.9	Pass
T3	160 - 140	Leg	P3x.300 (3.50 OD)	83.0	Pass
T4	140 - 120	Leg	P4x.337 (4.50 OD)	84.9	Pass
T5	120 - 113.333	Leg	P5x.375 (5.5625 OD)	63.3	Pass
T6	113.333 - 106.667	Leg	P5x.375 (5.5625 OD)	68.9	Pass
T7	106.667 - 100	Leg	P5x.375 (5.5625 OD)	74.5	Pass
T8	100 - 80	Leg	P6x.28 (6.625 OD)	94.9	Pass
T9	80 - 70	Leg	P6x.432 (6.625 OD)	75.5	Pass
T10	70 - 60	Leg	P6x.432 (6.625 OD)	81.6	Pass
T11	60 - 50	Leg	P8x.322 (8.625 OD)	80.2	Pass
T12	50 - 40	Leg	P8x.322 (8.625 OD)	85.4	Pass
T13	40 - 20	Leg	P8x.322 (8.625 OD)	95.5	Pass
T14	20 - 10	Leg	P8x.5 (8.625 OD)	66.6	Pass
T15	10 - 0	Leg	P8x.5 (8.625 OD)	69.7	Pass
T1	195 - 180	Diagonal	L1 3/4x1 3/4x3/16	21.0 28.1 (b)	Pass
T2	180 - 160	Diagonal	L1 3/4x1 3/4x3/16	59.9	Pass
T3	160 - 140	Diagonal	L2x2x3/16	96.7	Pass
T4	140 - 120	Diagonal	L2 1/2x2 1/2x3/16	81.3	Pass
T5	120 - 113.333	Diagonal	L2 1/2x2 1/2x3/16	87.0	Pass
T6	113.333 - 106.667	Diagonal	L2 1/2x2 1/2x3/16	95.5	Pass
T7	106.667 - 100	Diagonal	L2 1/2x2 1/2x1/4	81.5	Pass
T8	100 - 80	Diagonal	L3x3x3/16	79.4	Pass
T9	80 - 70	Diagonal	L3x3x1/4	93.8	Pass
T10	70 - 60	Diagonal	L3x3x3/8	73.1	Pass
T11	60 - 50	Diagonal	L3x3 1/2x1/4	91.7	Pass
T12	50 - 40	Diagonal	L3x3x3/8	90.8	Pass
T13	40 - 20	Diagonal	L3 1/2x3 1/2x1/4	99.7	Pass
T14	20 - 10	Diagonal	L3 1/2x4x1/4	89.8	Pass
T15	10 - 0	Diagonal	L4x4x1/4	82.1	Pass
T1	195 - 180	Top Girt	L1 3/4x1 3/4x3/16	4.9	Pass
T2	180 - 160	Top Girt	L1 3/4x1 3/4x3/16	4.9	Pass

1. Capacities include 1/3 allowable stress increase for wind, per TIA/EIA-222-F standards.

Table 4 – Additional Structure Component Capacities

Elevation (ft.)	Component	% Capacity	Pass / Fail	Notes
0	Anchor Rods	62.6	Pass	-
0	Base Foundation (Soil Interaction)	57.9	Pass	-
0	Base Foundation (Structural)	24.5	Pass	-

1. Capacities include 1/3 allowable stress increase for wind, per TIA/EIA-222-F standards.

FDH Velocitel has considered the acceptability of the tower stress level with the existing and proposed loading prior to the installation of the proposed tower modifications referenced in this report. This opinion is consistent with section 4.5 of TIA-1019-A-2012, *Structural Standards for Installation, Alteration and Maintenance of Antenna Supporting Structures and Antennas*, using a non-operational, fastest-mile, basic design wind speed of 68 mph. This reduced loading is based upon the reduced statistical risk of a wind speed of that magnitude occurring for durations of up to 6 months.

GENERAL COMMENTS

This engineering analysis is based upon the theoretical capacity of the structure. It is not a condition assessment of the tower and its foundation. It is the responsibility of SBA Network Services, Inc. to verify that the tower modeled and analyzed is the correct structure (with accurate antenna loading information) modeled. If there are substantial modifications to be made or the assumptions made in this analysis are not accurate, FDH Velocitel should be notified immediately to perform a revised analysis.

LIMITATIONS

All opinions and conclusions are considered accurate to a reasonable degree of engineering certainty based upon the evidence available at the time of this report. All opinions and conclusions are subject to revision based upon receipt of new or additional/updated information. All services are provided exercising a level of care and diligence equivalent to the standard and care of our profession. No other warranty or guarantee, expressed or implied, is offered. Our services are confidential in nature and we will not release this report to any other party without the client's consent. The use of this engineering work is limited to the express purpose for which it was commissioned and it may not be reused, copied, or distributed for any other purpose without the written consent of FDH Velocitel.

APPENDIX

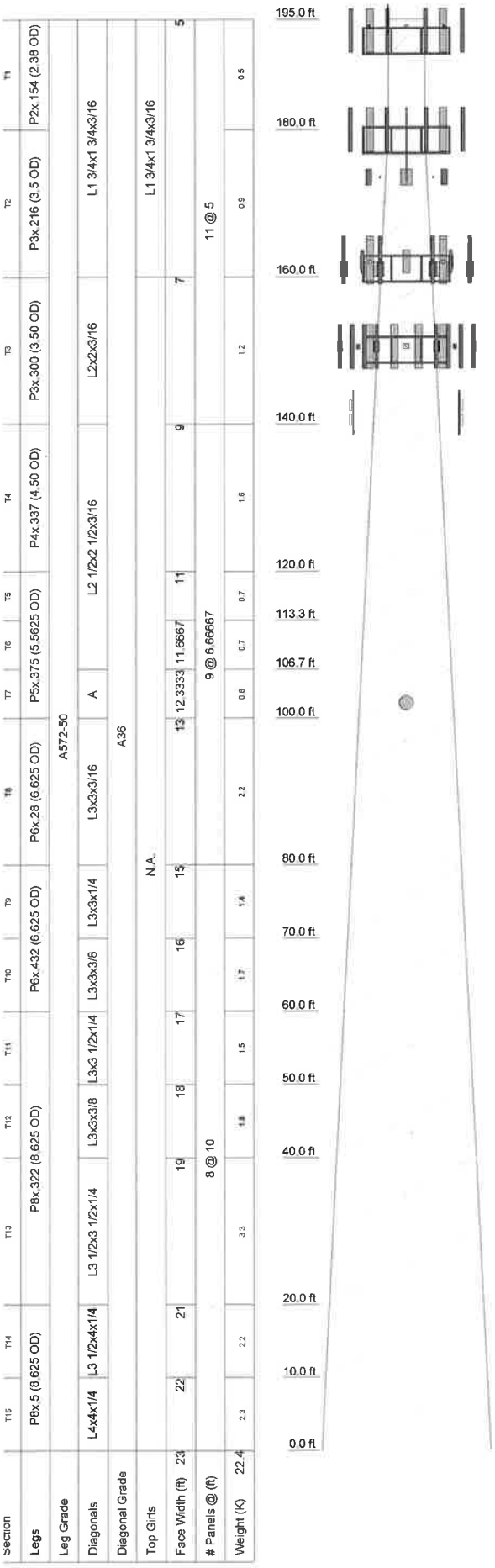

DESIGNED APPURTENANCE LOADING

TYPE	ELEVATION	TYPE	ELEVATION
Lightning Rod	195	(3) T-Frames	161
AIR 21 B2A/B4P w/ Mount Pipe	192	(2) SBNHH-1D65B w/ Mount Pipe	161
AIR 21 B2A/B4P w/ Mount Pipe	192	(2) SBNHH-1D65B w/ Mount Pipe	161
AIR 21 B2A/B4P w/ Mount Pipe	192	(2) SBNHH-1D65B w/ Mount Pipe	161
AIR 21 B4A/B2P w/ Mount Pipe	192	RRH2X60-AWS	161
AIR 21 B4A/B2P w/ Mount Pipe	192	RRH2X60-AWS	161
AIR 21 B4A/B2P w/ Mount Pipe	192	RRH2X60-AWS	161
KRY 112 144/1	192	RRH2X60-PCS	161
KRY 112 144/1	192	RRH2X60-PCS	161
KRY 112 144/1	192	RRH2X60-PCS	161
(3) T-Frames	192	RRH2x60-700	161
APXVTM14-C-I20 w/Mount Pipe	178.5	RRH2x60-700	161
APXVTM14-C-I20 w/Mount Pipe	178.5	RRH2x60-700	161
APXVTM14-C-I20 w/Mount Pipe	178.5	(2) FD9R6004/2CL-3CL Diplexer	161
TD-RRH8x20-25	178.5	(2) FD9R6004/2CL-3CL Diplexer	161
TD-RRH8x20-25	178.5	(2) FD9R6004/2CL-3CL Diplexer	161
TD-RRH8x20-25	178.5	DC6-48-60-18-8F	150.5
APXVSPP18-C-A20 w/Mount Pipe	178.5	(3) AM-X-CD-14-65-00T w/ Mount Pipe	150
APXVSPP18-C-A20 w/Mount Pipe	178.5	(3) AM-X-CD-14-65-00T w/ Mount Pipe	150
APXVSPP18-C-A20 w/Mount Pipe	178.5	(3) AM-X-CD-14-65-00T w/ Mount Pipe	150
(3) T-Frames	178.5	7770 w/Mount Pipe	150
PD1151	178	7770 w/Mount Pipe	150
1900 MHz RRU	175	7770 w/Mount Pipe	150
1900 MHz RRU	175	(2) TT19-08BP111-001 TMA	150
800 MHz RRU	175	(2) TT19-08BP111-001 TMA	150
800 MHz RRU	175	(2) TT19-08BP111-001 TMA	150
800 MHz RRU	175	LGP13519 Diplexer	150
800 MHz Filter	175	LGP13519 Diplexer	150
800 MHz Filter	175	LGP13519 Diplexer	150
800 MHz Filter	175	DBC-750	150
(2) ACU-A20-N RET	175	DBC-750	150
ACU-A20-N RET	175	DBC-750	150
ACU-A20-N RET	175	(2) RRUS-11	150
1900 MHz RRU	175	(2) RRUS-11	150
Pipe Mount [PM 601-3]	175	(2) RRUS-11	150
(2) LPA-80063/4CF w/ Mount Pipe	161	(3) T-Frames	150
LPA-80063/4CF w/ Mount Pipe	161	Sinclair SD312HL	138
LPA-80063/4CF w/ Mount Pipe	161	Sinclair SD312HL	138
LPA-80063/6CF w/ Mount Pipe	161	Sinclair SD312HL	138
LPA-80063/6CF w/ Mount Pipe	161	(3) Standoffs	138
(2) DB-T1-6Z-8AB-0Z	161	Pipe Mount	101
(2) DB-T1-6Z-8AB-0Z	161	RDH4518A	101
(2) DB-T1-6Z-8AB-0Z	161		

SYMBOL LIST

MARK	SIZE	MARK	SIZE
A	L2 1/2x2 1/2x1/4		

MATERIAL STRENGTH

GRADE	Fy	Fu	GRADE	Fy	Fu
A572-50	50 ksi	65 ksi	A36	36 ksi	58 ksi

TOWER DESIGN NOTES

1. Tower is located in Middlesex County, Connecticut.
2. Tower designed for a 85 mph basic wind in accordance with the TIA/EIA-222-F Standard.
3. Tower is also designed for a 38 mph basic wind with 0.75 in ice. Ice is considered to increase in thickness with height.
4. Deflections are based upon a 50 mph wind.
5. TOWER RATING: 99.7%

MAX. COR
DOWN:
SHEAR

UPLIFT: -274 K
SHEAR: 29 K

AXIAL 86 K
SHEAR 15 K
MOMENT 1740 kip-ft
TORQUE 2 kip-ft
38 mph WIND - 0.7500 in ICE

AXIAL 42 K
SHEAR 51 K
MOMENT 5899 kip-ft
TORQUE 6 kip-ft
REACTIONS - 85 mph WIND

FDH VELOCITEL
Tower Analyst
FDH Velocitel
6521 Merdien Dr
Raleigh, NC 27616
Phone: (919) 755-1012
FAX: (919) 755-1031

Job: **Clinton 4 CT, CT01879-S-02**			
Project: **15BZTJ1400**			
Client: SBA Network Services, Inc.	Drawn by: Byron K Webb		App'd:
Code: TIA/EIA-222-F	Date: 09/24/15		Scale: N
Path:			Dwg No.

Tower Input Data

The main tower is a 3x free standing tower with an overall height of 195.00 ft above the ground line.
The base of the tower is set at an elevation of 0.00 ft above the ground line.
The face width of the tower is 5.00 ft at the top and 23.00 ft at the base.
This tower is designed using the TIA/EIA-222-F standard.
The following design criteria apply:

Tower is located in Middlesex County, Connecticut.
Basic wind speed of 85 mph.
Nominal ice thickness of 0.7500 in.
Ice thickness is considered to increase with height.
Ice density of 56 pcf.
A wind speed of 38 mph is used in combination with ice.
Temperature drop of 50 °F.
Deflections calculated using a wind speed of 50 mph.
Pressures are calculated at each section.
Stress ratio used in tower member design is 1.333.
Local bending stresses due to climbing loads, feed line supports, and appurtenance mounts are not considered.

Options

Consider Moments - Legs
Consider Moments - Horizontals
Consider Moments - Diagonals
Use Moment Magnification
√ Use Code Stress Ratios
√ Use Code Safety Factors - Guys
√ Escalate Ice
Always Use Max Kz
Use Special Wind Profile
√ Include Bolts In Member Capacity
Leg Bolts Are At Top Of Section
√ Secondary Horizontal Braces Leg
Use Diamond Inner Bracing (4 Sided)
Add IBC .6D+W Combination

Distribute Leg Loads As Uniform
Assume Legs Pinned
√ Assume Rigid Index Plate
√ Use Clear Spans For Wind Area
√ Use Clear Spans For KL/r
Retension Guys To Initial Tension
√ Bypass Mast Stability Checks
√ Use Azimuth Dish Coefficients
√ Project Wind Area of Appurt.
Autocalc Torque Arm Areas
SR Members Have Cut Ends
√ Sort Capacity Reports By Component
Triangulate Diamond Inner Bracing
Use TIA-222-G Tension Splice Capacity Exemption

Treat Feedline Bundles As Cylinder
Use ASCE 10 X-Brace Ly Rules
√ Calculate Redundant Bracing Forces
Ignore Redundant Members in FEA
√ SR Leg Bolts Resist Compression
√ All Leg Panels Have Same Allowable
Offset Girt At Foundation
√ Consider Feedline Torque
√ Include Angle Block Shear Check

Poles

Include Shear-Torsion Interaction
Always Use Sub-Critical Flow
Use Top Mounted Sockets

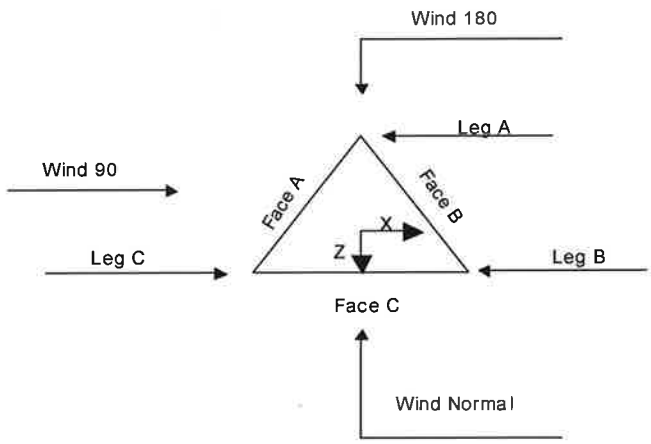

Triangular Tower

Tower Section Geometry

Tower Section	Tower Elevation ft	Assembly Database	Description	Section Width ft	Number of Sections	Section Length ft
T1	195.00-180.00			5.00	1	15.00
T2	180.00-160.00			5.00	1	20.00
T3	160.00-140.00			7.00	1	20.00
T4	140.00-120.00			9.00	1	20.00
T5	120.00-113.33			11.00	1	6.67
T6	113.33-106.67			11.67	1	6.67
T7	106.67-100.00			12.33	1	6.67
T8	100.00-80.00			13.00	1	20.00
T9	80.00-70.00			15.00	1	10.00
T10	70.00-60.00			16.00	1	10.00
T11	60.00-50.00			17.00	1	10.00
T12	50.00-40.00			18.00	1	10.00
T13	40.00-20.00			19.00	1	20.00
T14	20.00-10.00			21.00	1	10.00
T15	10.00-0.00			22.00	1	10.00

Tower Section Geometry *(cont'd)*

Tower Section	Tower Elevation ft	Diagonal Spacing ft	Bracing Type	Has K Brace End Panels	Has Horizontals	Top Girt Offset in	Bottom Girt Offset in

Tower Section	Tower Elevation ft	Diagonal Spacing ft	Bracing Type	Has K Brace End Panels	Has Horizontals	Top Girt Offset in	Bottom Girt Offset in
T1	195.00-180.00	5.00	X Brace	No	No	0.0000	0.0000
T2	180.00-160.00	5.00	X Brace	No	No	0.0000	0.0000
T3	160.00-140.00	5.00	X Brace	No	No	0.0000	0.0000
T4	140.00-120.00	6.67	X Brace	No	No	0.0000	0.0000
T5	120.00-113.33	6.67	X Brace	No	No	0.0000	0.0000
T6	113.33-106.67	6.67	X Brace	No	No	0.0000	0.0000
T7	106.67-100.00	6.67	X Brace	No	No	0.0000	0.0000
T8	100.00-80.00	6.67	X Brace	No	No	0.0000	0.0000
T9	80.00-70.00	10.00	X Brace	No	No	0.0000	0.0000
T10	70.00-60.00	10.00	X Brace	No	No	0.0000	0.0000
T11	60.00-50.00	10.00	X Brace	No	No	0.0000	0.0000
T12	50.00-40.00	10.00	X Brace	No	No	0.0000	0.0000
T13	40.00-20.00	10.00	X Brace	No	No	0.0000	0.0000
T14	20.00-10.00	10.00	X Brace	No	No	0.0000	0.0000
T15	10.00-0.00	10.00	X Brace	No	No	0.0000	0.0000

Tower Section Geometry *(cont'd)*

Tower Elevation ft	Leg Type	Leg Size	Leg Grade	Diagonal Type	Diagonal Size	Diagonal Grade
T1 195.00-180.00	Pipe	P2x.154 (2.38 OD)	A572-50 (50 ksi)	Equal Angle	L1 3/4x1 3/4x3/16	A36 (36 ksi)
T2 180.00-160.00	Pipe	P3x.216 (3.5 OD)	A572-50 (50 ksi)	Equal Angle	L1 3/4x1 3/4x3/16	A36 (36 ksi)
T3 160.00-140.00	Pipe	P3x.300 (3.50 OD)	A572-50 (50 ksi)	Equal Angle	L2x2x3/16	A36 (36 ksi)
T4 140.00-120.00	Pipe	P4x.337 (4.50 OD)	A572-50 (50 ksi)	Equal Angle	L2 1/2x2 1/2x3/16	A36 (36 ksi)
T5 120.00-113.33	Pipe	P5x.375 (5.5625 OD)	A572-50 (50 ksi)	Equal Angle	L2 1/2x2 1/2x3/16	A36 (36 ksi)
T6 113.33-106.67	Pipe	P5x.375 (5.5625 OD)	A572-50 (50 ksi)	Equal Angle	L2 1/2x2 1/2x3/16	A36 (36 ksi)
T7 106.67-100.00	Pipe	P5x.375 (5.5625 OD)	A572-50 (50 ksi)	Equal Angle	L2 1/2x2 1/2x1/4	A36 (36 ksi)
T8 100.00-80.00	Pipe	P6x.28 (6.625 OD)	A572-50 (50 ksi)	Equal Angle	L3x3x3/16	A36 (36 ksi)
T9 80.00-70.00	Pipe	P6x.432 (6.625 OD)	A572-50 (50 ksi)	Equal Angle	L3x3x1/4	A36 (36 ksi)
T10 70.00-60.00	Pipe	P6x.432 (6.625 OD)	A572-50 (50 ksi)	Equal Angle	L3x3x3/8	A36 (36 ksi)
T11 60.00-50.00	Pipe	P8x.322 (8.625 OD)	A572-50 (50 ksi)	Single Angle	L3x3 1/2x1/4	A36 (36 ksi)
T12 50.00-40.00	Pipe	P8x.322 (8.625 OD)	A572-50 (50 ksi)	Single Angle	L3x3x3/8	A36 (36 ksi)
T13 40.00-20.00	Pipe	P8x.322 (8.625 OD)	A572-50 (50 ksi)	Equal Angle	L3 1/2x3 1/2x1/4	A36 (36 ksi)
T14 20.00-10.00	Pipe	P8x.5 (8.625 OD)	A572-50 (50 ksi)	Single Angle	L3 1/2x4x1/4	A36 (36 ksi)
T15 10.00-0.00	Pipe	P8x.5 (8.625 OD)	A572-50 (50 ksi)	Single Angle	L4x4x1/4	A36 (36 ksi)

Tower Section Geometry *(cont'd)*

Tower Elevation ft	Top Girt Type	Top Girt Size	Top Girt Grade	Bottom Girt Type	Bottom Girt Size	Bottom Girt Grade
T1 195.00-180.00	Equal Angle	L1 3/4x1 3/4x3/16	A36 (36 ksi)	Solid Round		A36 (36 ksi)
T2 180.00-160.00	Equal Angle	L1 3/4x1 3/4x3/16	A36 (36 ksi)	Solid Round		A36 (36 ksi)

Tower Section Geometry *(cont'd)*

Tower Elevation ft	Gusset Area (per face) ft^2	Gusset Thickness in	Gusset Grade	Adjust. Factor A_f	Adjust. Factor A_r	Weight Mult.	Double Angle Stitch Bolt Spacing Diagonals in	Double Angle Stitch Bolt Spacing Horizontals in
T1 195.00-180.00	0.00	0.0000	A36 (36 ksi)	1	1	1	36.0000	36.0000
T2 180.00-160.00	0.00	0.0000	A36 (36 ksi)	1	1	1	36.0000	36.0000
T3 160.00-140.00	0.00	0.0000	A36 (36 ksi)	1	1	1	36.0000	36.0000
T4 140.00-120.00	0.00	0.0000	A36 (36 ksi)	1	1	1	36.0000	36.0000
T5 120.00-113.33	0.00	0.0000	A36 (36 ksi)	1	1	1	36.0000	36.0000
T6 113.33-106.67	0.00	0.0000	A36 (36 ksi)	1	1	1	36.0000	36.0000
T7 106.67-100.00	0.00	0.0000	A36 (36 ksi)	1	1	1	36.0000	36.0000
T8 100.00-80.00	0.00	0.0000	A36 (36 ksi)	1	1	1	36.0000	36.0000
T9 80.00-70.00	0.00	0.0000	A36 (36 ksi)	1	1	1	36.0000	36.0000
T10 70.00-60.00	0.00	0.0000	A36 (36 ksi)	1	1	1	36.0000	36.0000
T11 60.00-50.00	0.00	0.0000	A36 (36 ksi)	1	1	1	36.0000	36.0000
T12 50.00-40.00	0.00	0.0000	A36 (36 ksi)	1	1	1	36.0000	36.0000
T13 40.00-20.00	0.00	0.0000	A36 (36 ksi)	1	1	1	36.0000	36.0000
T14 20.00-10.00	0.00	0.0000	A36 (36 ksi)	1	1	1	36.0000	36.0000
T15 10.00-0.00	0.00	0.0000	A36 (36 ksi)	1	1	1	36.0000	36.0000

Tower Section Geometry *(cont'd)*

K Factors[1]

Tower Elevation ft	Calc K Single Angles	Calc K Solid Rounds	Legs	X Brace Diags X Y	K Brace Diags X Y	Single Diags X Y	Girts X Y	Horiz. X Y	Sec. Horiz. X Y	Inner Brace X Y
T1	Yes	No	1	1	1	1	1	1	1	1
195.00-180.00				1	1	1	1	1	1	1
T2	Yes	No	1	1	1	1	1	1	1	1
180.00-160.00				1	1	1	1	1	1	1
T3	Yes	No	1	1	1	1	1	1	1	1
160.00-140.00				1	1	1	1	1	1	1
T4	Yes	No	1	1	1	1	1	1	1	1
140.00-120.00				1	1	1	1	1	1	1
T5	Yes	No	1	1	1	1	1	1	1	1
120.00-113.33				1	1	1	1	1	1	1
T6	Yes	No	1	1	1	1	1	1	1	1
113.33-106.67				1	1	1	1	1	1	1
T7	Yes	No	1	1	1	1	1	1	1	1
106.67-100.00				1	1	1	1	1	1	1
T8	Yes	No	1	1	1	1	1	1	1	1
100.00-80.00				1	1	1	1	1	1	1
T9	Yes	No	1	1	1	1	1	1	1	1
80.00-70.00				1	1	1	1	1	1	1
T10	Yes	No	1	1	1	1	1	1	1	1
70.00-60.00				1	1	1	1	1	1	1
T11	Yes	No	1	1	1	1	1	1	1	1
60.00-50.00				1	1	1	1	1	1	1
T12	Yes	No	1	1	1	1	1	1	1	1
50.00-40.00				1	1	1	1	1	1	1
T13	Yes	No	1	1	1	1	1	1	1	1
40.00-20.00				1	1	1	1	1	1	1
T14	Yes	No	1	1	1	1	1	1	1	1
20.00-10.00				1	1	1	1	1	1	1
T15	Yes	No	1	1	1	1	1	1	1	1
10.00-0.00				1	1	1	1	1	1	1

[1]*Note: K factors are applied to member segment lengths. K-braces without inner supporting members will have the K factor in the out-of-plane direction applied to the overall length.*

Tower Section Geometry *(cont'd)*

Tower Elevation ft	Leg		Diagonal		Top Girt		Bottom Girt		Mid Girt		Long Horizontal		Short Horizontal	
	Net Width Deduct in	U	Net Width Deduct in	U	Net Width Deduct in	U	Net Width Deduct in	U	Net Width Deduct in	U	Net Width Deduct in	U	Net Width Deduct in	U
T1	0.0000	1	0.0000	0.75	0.0000	0.75	0.0000	0.75	0.0000	0.75	0.0000	0.75	0.0000	0.75
195.00-180.00														
T2	0.0000	1	0.0000	0.75	0.0000	0.75	0.0000	0.75	0.0000	0.75	0.0000	0.75	0.0000	0.75
180.00-160.00														
T3	0.0000	1	0.0000	0.75	0.0000	0.75	0.0000	0.75	0.0000	0.75	0.0000	0.75	0.0000	0.75
160.00-140.00														
T4	0.0000	1	0.0000	0.75	0.0000	0.75	0.0000	0.75	0.0000	0.75	0.0000	0.75	0.0000	0.75
140.00-120.00														
T5	0.0000	1	0.0000	0.75	0.0000	0.75	0.0000	0.75	0.0000	0.75	0.0000	0.75	0.0000	0.75
120.00-113.33														
T6	0.0000	1	0.0000	0.75	0.0000	0.75	0.0000	0.75	0.0000	0.75	0.0000	0.75	0.0000	0.75
113.33-106.67														

Tower Elevation ft	Leg		Diagonal		Top Girt		Bottom Girt		Mid Girt		Long Horizontal		Short Horizontal	
	Net Width Deduct in	U	Net Width Deduct in	U	Net Width Deduct in	U	Net Width Deduct in	U	Net Width Deduct in	U	Net Width Deduct in	U	Net Width Deduct in	U
T7 106.67-100.00	0.0000	1	0.0000	0.75	0.0000	0.75	0.0000	0.75	0.0000	0.75	0.0000	0.75	0.0000	0.75
T8 100.00-80.00	0.0000	1	0.0000	0.75	0.0000	0.75	0.0000	0.75	0.0000	0.75	0.0000	0.75	0.0000	0.75
T9 80.00-70.00	0.0000	1	0.0000	0.75	0.0000	0.75	0.0000	0.75	0.0000	0.75	0.0000	0.75	0.0000	0.75
T10 70.00-60.00	0.0000	1	0.0000	0.75	0.0000	0.75	0.0000	0.75	0.0000	0.75	0.0000	0.75	0.0000	0.75
T11 60.00-50.00	0.0000	1	0.0000	0.75	0.0000	0.75	0.0000	0.75	0.0000	0.75	0.0000	0.75	0.0000	0.75
T12 50.00-40.00	0.0000	1	0.0000	0.75	0.0000	0.75	0.0000	0.75	0.0000	0.75	0.0000	0.75	0.0000	0.75
T13 40.00-20.00	0.0000	1	0.0000	0.75	0.0000	0.75	0.0000	0.75	0.0000	0.75	0.0000	0.75	0.0000	0.75
T14 20.00-10.00	0.0000	1	0.0000	0.75	0.0000	0.75	0.0000	0.75	0.0000	0.75	0.0000	0.75	0.0000	0.75
T15 10.00-0.00	0.0000	1	0.0000	0.75	0.0000	0.75	0.0000	0.75	0.0000	0.75	0.0000	0.75	0.0000	0.75

Tower Section Geometry *(cont'd)*

Tower Elevation ft	Leg Connection Type	Leg		Diagonal		Top Girt		Bottom Girt		Mid Girt		Long Horizontal		Short Horizontal	
		Bolt Size in	No.	Bolt Size in	No.	Bolt Size in	No.	Bolt Size in	No.	Bolt Size in	No.	Bolt Size in	No.	Bolt Size in	No.
T1 195.00-180.00	Flange	0.7500 A325N	0	0.6250 A325X	1	0.6250 A325X	1	0.6250 A325N	0	0.6250 A325N	0	0.6250 A325N	0	0.6250 A325N	0
T2 180.00-160.00	Flange	0.7500 A325N	0	0.6250 A325X	1	0.6250 A325X	1	0.6250 A325N	0	0.6250 A325N	0	0.6250 A325N	0	0.6250 A325N	0
T3 160.00-140.00	Flange	0.7500 A325N	0	0.6250 A325X	1	0.6250 A325N	0	0.6250 A325N	0	0.6250 A325N	0	0.6250 A325N	0	0.6250 A325N	0
T4 140.00-120.00	Flange	0.7500 A325N	0	0.6250 A325X	1	0.6250 A325N	0	0.6250 A325N	0	0.6250 A325N	0	0.6250 A325N	0	0.6250 A325N	0
T5 120.00-113.33	Flange	0.7500 A325N	0	0.6250 A325X	1	0.6250 A325N	0	0.0000 A325N	0	0.6250 A325N	0	0.6250 A325N	0	0.6250 A325N	0
T6 113.33-106.67	Flange	0.7500 A325N	0	0.6250 A325X	1	0.6250 A325N	0	0.0000 A325N	0	0.6250 A325N	0	0.6250 A325N	0	0.6250 A325N	0
T7 106.67-100.00	Flange	0.7500 A325N	0	0.6250 A325X	1	0.6250 A325N	0	0.6250 A325N	0	0.6250 A325N	0	0.6250 A325N	0	0.6250 A325N	0
T8 100.00-80.00	Flange	0.7500 A325N	0	0.7500 A325X	1	0.6250 A325N	0	0.6250 A325N	0	0.6250 A325N	0	0.6250 A325N	0	0.6250 A325N	0
T9 80.00-70.00	Flange	0.7500 A325N	0	0.7500 A325X	1	0.6250 A325N	0	0.0000 A325N	0	0.6250 A325N	0	0.6250 A325N	0	0.6250 A325N	0
T10 70.00-60.00	Flange	0.7500 A325N	0	0.7500 A325X	1	0.6250 A325N	0	0.0000 A325N	0	0.6250 A325N	0	0.6250 A325N	0	0.6250 A325N	0
T11 60.00-50.00	Flange	0.7500 A325N	0	0.7500 A325X	1	0.6250 A325N	0	0.0000 A325N	0	0.6250 A325N	0	0.6250 A325N	0	0.6250 A325N	0
T12 50.00-40.00	Flange	0.7500 A325N	0	0.7500 A325X	1	0.6250 A325N	0	0.6250 A325N	0	0.6250 A325N	0	0.6250 A325N	0	0.6250 A325N	0
T13 40.00-20.00	Flange	0.7500 A325N	0	0.7500 A325X	1	0.6250 A325N	0	0.0000 A325N	0	0.6250 A325N	0	0.6250 A325N	0	0.6250 A325N	0
T14 20.00-10.00	Flange	1.5000 A572-50	8	0.7500 A325X	1	0.6250 A325N	0	0.0000 A325N	0	0.6250 A325N	0	0.6250 A325N	0	0.6250 A325N	0

Tower Elevation ft	Leg Connection Type	Leg Bolt Size in	Leg No.	Diagonal Bolt Size in	Diagonal No.	Top Girt Bolt Size in	Top Girt No.	Bottom Girt Bolt Size in	Bottom Girt No.	Mid Girt Bolt Size in	Mid Girt No.	Long Horizontal Bolt Size in	Long Horizontal No.	Short Horizontal Bolt Size in	Short Horizontal No.
T15 10.00-0.00	Flange	1.5000 A572-50	8	0.7500 A325X	1	0.6250 A325N	0	0.6250 A325N	0	0.6250 A325N	0	0.6250 A325N	0	0.6250 A325N	0

Feed Line/Linear Appurtenances - Entered As Round Or Flat

Description	Face or Leg	Allow Shield	Component Type	Placement ft	Face Offset in	Lateral Offset (Frac FW)	#	# Per Row	Clear Spacing in	Width or Diameter in	Perimeter in	Weight plf
1-5/8"	A	Yes	Ar (CfAe)	192.00 - 10.00	0.0000	-0.15	7	7	0.5000	1.9800		0.82
1-5/8"	A	Yes	Ar (CfAe)	192.00 - 10.00	0.0000	-0.05	6	6	0.5000	1.9800		0.82
Feedline Ladder (Af) 1.5" ***	A	Yes	Af (CfAe)	192.00 - 10.00	0.0000	-0.1	1	1	0.5000	1.5000	6.0000	4.20
7/8" ***	B	Yes	Ar (CfAe)	184.00 - 140.00	0.0000	-0.3	1	1	0.5000	1.1100		0.54
1-1/4"	C	Yes	Ar (CfAe)	182.00 - 10.00	0.0000	0.1	4	4	0.5000	1.5500		0.66
Feedline Ladder (Af) 1.5" ***	C	Yes	Af (CfAe)	182.00 - 10.00	0.0000	0.1	1	1	0.5000	1.5000	6.0000	4.20
1-5/8"	B	Yes	Ar (CfAe)	152.00 - 10.00	-2.0000	0.15	12	9	0.5000	1.9800		0.82
3" Rigid Conduit	B	Yes	Ar (CfAe)	152.00 - 10.00	-4.0000	0.15	1	1	0.5000	3.0000		1.78
Feedline Ladder (Af) 1.5" ***	B	Yes	Af (CfAe)	152.00 - 10.00	-2.0000	0.15	1	1	0.5000	0.0000	1.5000	4.20
7/8	B	Yes	Ar (CfAe)	140.00 - 10.00	0.0000	-0.3	4	2	0.5000	1.1100		0.54
CATEGORY 5e (1 WIRE) ***	B	Yes	Ar (CfAe)	100.00 - 10.00	0.0000	-0.29	2	1	0.5000	1.0000		0.21
1-5/8"	B	Yes	Ar (CfAe)	162.00 - 10.00	0.0000	0.25	12	6	0.5000	1.9800		0.82
Feedline Ladder (Af) 1.5" *	B	Yes	Af (CfAe)	162.00 - 10.00	0.0000	0.25	1	1	0.5000	1.5000	6.0000	4.20
Climbing Ladder	B	Yes	Af (CfAe)	195.00 - 10.00	0.0000	0	1	1	0.5000	1.5000	6.0000	4.20
Safety Line 3/8	B	Yes	Ar (CfAe)	195.00 - 10.00	0.0000	0	1	1	0.3750	0.3750		0.22

Feed Line/Linear Appurtenances Section Areas

Tower Section	Tower Elevation ft	Face	A_R ft^2	A_F ft^2	C_AA_A In Face ft^2	C_AA_A Out Face ft^2	Weight K
T1	195.00-180.00	A	25.740	1.500	0.000	0.000	0.18
		B	0.839	1.875	0.000	0.000	0.07
		C	1.033	0.250	0.000	0.000	0.01

Tower Section	Tower Elevation ft	Face	A_R ft^2	A_F ft^2	C_AA_A In Face ft^2	C_AA_A Out Face ft^2	Weight K
T2	180.00-160.00	A	42.900	2.500	0.000	0.000	0.30
		B	4.455	2.750	0.000	0.000	0.13
		C	10.333	2.500	0.000	0.000	0.14
T3	160.00-140.00	A	42.900	2.500	0.000	0.000	0.30
		B	43.095	5.000	0.000	0.000	0.57
		C	10.333	2.500	0.000	0.000	0.14
T4	140.00-120.00	A	42.900	2.500	0.000	0.000	0.30
		B	58.825	5.000	0.000	0.000	0.73
		C	10.333	2.500	0.000	0.000	0.14
T5	120.00-113.33	A	14.300	0.833	0.000	0.000	0.10
		B	19.608	1.667	0.000	0.000	0.24
		C	3.444	0.833	0.000	0.000	0.05
T6	113.33-106.67	A	14.300	0.833	0.000	0.000	0.10
		B	19.608	1.667	0.000	0.000	0.24
		C	3.444	0.833	0.000	0.000	0.05
T7	106.67-100.00	A	14.300	0.833	0.000	0.000	0.10
		B	19.608	1.667	0.000	0.000	0.24
		C	3.444	0.833	0.000	0.000	0.05
T8	100.00-80.00	A	42.900	2.500	0.000	0.000	0.30
		B	60.492	5.000	0.000	0.000	0.74
		C	10.333	2.500	0.000	0.000	0.14
T9	80.00-70.00	A	21.450	1.250	0.000	0.000	0.15
		B	30.246	2.500	0.000	0.000	0.37
		C	5.167	1.250	0.000	0.000	0.07
T10	70.00-60.00	A	21.450	1.250	0.000	0.000	0.15
		B	30.246	2.500	0.000	0.000	0.37
		C	5.167	1.250	0.000	0.000	0.07
T11	60.00-50.00	A	21.450	1.250	0.000	0.000	0.15
		B	30.246	2.500	0.000	0.000	0.37
		C	5.167	1.250	0.000	0.000	0.07
T12	50.00-40.00	A	21.450	1.250	0.000	0.000	0.15
		B	30.246	2.500	0.000	0.000	0.37
		C	5.167	1.250	0.000	0.000	0.07
T13	40.00-20.00	A	42.900	2.500	0.000	0.000	0.30
		B	60.492	5.000	0.000	0.000	0.74
		C	10.333	2.500	0.000	0.000	0.14
T14	20.00-10.00	A	21.450	1.250	0.000	0.000	0.15
		B	30.246	2.500	0.000	0.000	0.37
		C	5.167	1.250	0.000	0.000	0.07
T15	10.00-0.00	A	0.000	0.000	0.000	0.000	0.00
		B	0.000	0.000	0.000	0.000	0.00
		C	0.000	0.000	0.000	0.000	0.00

Feed Line/Linear Appurtenances Section Areas - With Ice

Tower Section	Tower Elevation ft	Face or Leg	Ice Thickness in	A_R ft^2	A_F ft^2	C_AA_A In Face ft^2	C_AA_A Out Face ft^2	Weight K
T1	195.00-180.00	A	0.924	7.655	30.012	0.000	0.000	0.63
		B		3.764	3.415	0.000	0.000	0.15
		C		0.566	1.480	0.000	0.000	0.04
T2	180.00-160.00	A	0.913	12.687	49.996	0.000	0.000	1.04
		B		9.196	7.049	0.000	0.000	0.32
		C		5.627	14.779	0.000	0.000	0.38
T3	160.00-140.00	A	0.899	12.596	49.965	0.000	0.000	1.03
		B		23.347	50.703	0.000	0.000	1.65
		C		5.581	14.749	0.000	0.000	0.37
T4	140.00-120.00	A	0.884	12.494	49.931	0.000	0.000	1.02

Tower Section	Tower Elevation ft	Face or Leg	Ice Thickness in	A_R ft^2	A_F ft^2	C_AA_A In Face ft^2	C_AA_A Out Face ft^2	Weight K
		B		28.810	67.311	0.000	0.000	2.12
		C		5.530	14.715	0.000	0.000	0.37
T5	120.00-113.33	A	0.873	4.139	16.635	0.000	0.000	0.34
		B		9.540	22.412	0.000	0.000	0.70
		C		1.831	4.896	0.000	0.000	0.12
T6	113.33-106.67	A	0.867	4.126	16.631	0.000	0.000	0.33
		B		9.506	22.398	0.000	0.000	0.70
		C		1.824	4.892	0.000	0.000	0.12
T7	106.67-100.00	A	0.860	4.111	16.626	0.000	0.000	0.33
		B		9.470	22.384	0.000	0.000	0.70
		C		1.817	4.887	0.000	0.000	0.12
T8	100.00-80.00	A	0.846	12.240	49.847	0.000	0.000	0.99
		B		32.661	67.056	0.000	0.000	2.16
		C		5.403	14.630	0.000	0.000	0.36
T9	80.00-70.00	A	0.828	6.059	24.903	0.000	0.000	0.49
		B		16.147	33.467	0.000	0.000	1.07
		C		2.671	7.295	0.000	0.000	0.18
T10	70.00-60.00	A	0.814	6.012	24.887	0.000	0.000	0.48
		B		16.006	33.420	0.000	0.000	1.06
		C		2.648	7.279	0.000	0.000	0.17
T11	60.00-50.00	A	0.797	5.958	24.869	0.000	0.000	0.48
		B		15.845	33.366	0.000	0.000	1.05
		C		2.621	7.261	0.000	0.000	0.17
T12	50.00-40.00	A	0.778	5.895	24.848	0.000	0.000	0.47
		B		15.655	33.303	0.000	0.000	1.03
		C		2.589	7.240	0.000	0.000	0.17
T13	40.00-20.00	A	0.750	11.600	49.633	0.000	0.000	0.92
		B		30.742	66.417	0.000	0.000	2.03
		C		5.083	14.417	0.000	0.000	0.33
T14	20.00-10.00	A	0.750	5.800	24.817	0.000	0.000	0.46
		B		15.371	33.208	0.000	0.000	1.01
		C		2.542	7.208	0.000	0.000	0.17
T15	10.00-0.00	A	0.750	0.000	0.000	0.000	0.000	0.00
		B		0.000	0.000	0.000	0.000	0.00
		C		0.000	0.000	0.000	0.000	0.00

Feed Line Shielding

Section	Elevation ft	Face	A_R ft^2	A_R Ice ft^2	A_F ft^2	A_F Ice ft^2
T1	195.00-180.00	A	0.000	3.727	2.512	3.530
		B	0.000	0.774	0.250	0.733
		C	0.000	0.209	0.118	0.198
T2	180.00-160.00	A	0.000	5.555	3.794	5.323
		B	0.000	1.514	0.602	1.451
		C	0.000	1.868	1.072	1.790
T3	160.00-140.00	A	0.000	4.503	3.576	5.006
		B	0.000	5.430	3.788	6.037
		C	0.000	1.511	1.011	1.680
T4	140.00-120.00	A	0.000	3.373	3.414	4.769
		B	0.000	5.270	4.800	7.450
		C	0.000	1.129	0.965	1.596
T5	120.00-113.33	A	0.000	1.068	1.097	1.530
		B	0.000	1.667	1.543	2.387
		C	0.000	0.357	0.310	0.511
T6	113.33-106.67	A	0.000	1.045	1.082	1.507

Section	Elevation ft	Face	A_R ft^2	A_R Ice ft^2	A_F ft^2	A_F Ice ft^2
		B	0.000	1.629	1.521	2.350
		C	0.000	0.349	0.306	0.503
T7	106.67-100.00	A	0.000	1.023	1.069	1.487
		B	0.000	1.594	1.503	2.317
		C	0.000	0.341	0.302	0.496
T8	100.00-80.00	A	0.000	2.954	3.773	5.238
		B	0.000	4.806	5.442	8.521
		C	0.000	0.983	1.066	1.743
T9	80.00-70.00	A	0.000	1.032	1.351	1.870
		B	0.000	1.674	1.948	3.034
		C	0.000	0.342	0.382	0.620
T10	70.00-60.00	A	0.000	0.994	1.327	1.833
		B	0.000	1.610	1.914	2.969
		C	0.000	0.329	0.375	0.607
T11	60.00-50.00	A	0.000	0.957	1.307	1.801
		B	0.000	1.547	1.886	2.910
		C	0.000	0.316	0.370	0.595
T12	50.00-40.00	A	0.000	0.920	1.290	1.772
		B	0.000	1.482	1.861	2.856
		C	0.000	0.303	0.365	0.583
T13	40.00-20.00	A	0.000	1.735	2.961	4.049
		B	0.000	2.786	4.272	6.501
		C	0.000	0.568	0.837	1.326
T14	20.00-10.00	A	0.000	0.856	1.460	1.996
		B	0.000	1.374	2.107	3.206
		C	0.000	0.280	0.413	0.654
T15	10.00-0.00	A	0.000	0.000	0.000	0.000
		B	0.000	0.000	0.000	0.000
		C	0.000	0.000	0.000	0.000

Feed Line Center of Pressure

Section	Elevation ft	CP_X in	CP_Z in	CP_X Ice in	CP_Z Ice in
T1	195.00-180.00	-6.6636	-1.5029	-3.2417	-1.1617
T2	180.00-160.00	-7.2289	-0.0058	-3.8718	-0.5760
T3	160.00-140.00	0.5534	0.6194	1.2006	-0.1572
T4	140.00-120.00	2.9173	0.2183	2.9552	0.2434
T5	120.00-113.33	3.1211	0.2304	3.2014	0.2559
T6	113.33-106.67	3.2914	0.2416	3.3706	0.2663
T7	106.67-100.00	3.4551	0.2524	3.5320	0.2762
T8	100.00-80.00	3.5100	-0.1693	3.7372	-0.4803
T9	80.00-70.00	4.1942	-0.2010	4.5454	-0.5853
T10	70.00-60.00	4.4342	-0.2117	4.7953	-0.6102
T11	60.00-50.00	4.3155	-0.2054	4.7594	-0.5971
T12	50.00-40.00	4.5353	-0.2153	4.9886	-0.6151
T13	40.00-20.00	4.6344	-0.2192	5.1223	-0.6120
T14	20.00-10.00	4.9154	-0.2318	5.4262	-0.6486
T15	10.00-0.00	0.0000	0.0000	0.0000	0.0000

Discrete Tower Loads

Description	Face or Leg	Offset Type	Offsets: Horz Lateral Vert ft ft ft	Azimuth Adjustment °	Placement ft		C_AA_A Front ft^2	C_AA_A Side ft^2	Weight K
Lightning Rod	C	From Leg	0.00 0.00 0.00	0.0000	195.00	No Ice 1/2" Ice 1" Ice 2" Ice 4" Ice	0.25 0.66 0.97 1.49 2.68	0.25 0.66 0.97 1.49 2.68	0.03 0.03 0.04 0.06 0.14
***									
AIR 21 B2A/B4P w/ Mount Pipe	A	From Leg	3.00 0.00 1.50	0.0000	192.00	No Ice 1/2" Ice 1" Ice 2" Ice 4" Ice	7.09 7.78 8.37 9.60 12.20	6.02 7.17 8.03 9.79 13.53	0.12 0.18 0.25 0.40 0.86
AIR 21 B2A/B4P w/ Mount Pipe	B	From Leg	3.00 0.00 1.50	0.0000	192.00	No Ice 1/2" Ice 1" Ice 2" Ice 4" Ice	7.09 7.78 8.37 9.60 12.20	6.02 7.17 8.03 9.79 13.53	0.12 0.18 0.25 0.40 0.86
AIR 21 B2A/B4P w/ Mount Pipe	C	From Leg	3.00 0.00 1.50	0.0000	192.00	No Ice 1/2" Ice 1" Ice 2" Ice 4" Ice	7.09 7.78 8.37 9.60 12.20	6.02 7.17 8.03 9.79 13.53	0.12 0.18 0.25 0.40 0.86
AIR 21 B4A/B2P w/ Mount Pipe	A	From Leg	3.00 0.00 1.50	0.0000	192.00	No Ice 1/2" Ice 1" Ice 2" Ice 4" Ice	7.09 7.78 8.37 9.60 12.20	6.02 7.17 8.03 9.79 13.53	0.12 0.18 0.24 0.40 0.86
AIR 21 B4A/B2P w/ Mount Pipe	B	From Leg	3.00 0.00 1.50	0.0000	192.00	No Ice 1/2" Ice 1" Ice 2" Ice 4" Ice	7.09 7.78 8.37 9.60 12.20	6.02 7.17 8.03 9.79 13.53	0.12 0.18 0.24 0.40 0.86
AIR 21 B4A/B2P w/ Mount Pipe	C	From Leg	3.00 0.00 1.50	0.0000	192.00	No Ice 1/2" Ice 1" Ice 2" Ice 4" Ice	7.09 7.78 8.37 9.60 12.20	6.02 7.17 8.03 9.79 13.53	0.12 0.18 0.24 0.40 0.86
KRY 112 144/1	A	From Leg	3.00 0.00 2.00	0.0000	192.00	No Ice 1/2" Ice 1" Ice 2" Ice 4" Ice	0.41 0.50 0.60 0.82 1.36	0.19 0.26 0.33 0.51 0.97	0.01 0.01 0.02 0.03 0.08
KRY 112 144/1	B	From Leg	3.00 0.00 2.00	0.0000	192.00	No Ice 1/2" Ice 1" Ice 2" Ice 4" Ice	0.41 0.50 0.60 0.82 1.36	0.19 0.26 0.33 0.51 0.97	0.01 0.01 0.02 0.03 0.08
KRY 112 144/1	C	From Leg	3.00 0.00 2.00	0.0000	192.00	No Ice 1/2" Ice 1" Ice 2" Ice 4" Ice	0.41 0.50 0.60 0.82 1.36	0.19 0.26 0.33 0.51 0.97	0.01 0.01 0.02 0.03 0.08
(3) T-Frames	C	None		0.0000	192.00	No Ice 1/2" Ice 1" Ice 2" Ice 4" Ice	30.27 41.24 52.21 74.15 118.03	30.27 41.24 52.21 74.15 118.03	1.42 1.99 2.56 3.69 5.96

Description	Face or Leg	Offset Type	Offsets: Horz Lateral Vert ft ft ft	Azimuth Adjustment °	Placement ft		C_AA_A Front ft^2	C_AA_A Side ft^2	Weight K
***									
PD1151	A	From Leg	3.00	0.0000	178.00	No Ice	2.11	2.11	0.02
			0.00			1/2" Ice	4.74	4.74	0.04
			0.00			1" Ice	7.37	7.37	0.07
						2" Ice	12.63	12.63	0.12
						4" Ice	23.15	23.15	0.22
***									
APXVTM14-C-I20 w/Mount Pipe	A	From Leg	3.00	0.0000	178.50	No Ice	7.13	4.96	0.08
			0.00			1/2" Ice	7.66	5.75	0.13
			1.50			1" Ice	8.18	6.47	0.19
						2" Ice	9.26	8.01	0.34
						4" Ice	11.53	11.41	0.75
APXVTM14-C-I20 w/Mount Pipe	B	From Leg	3.00	0.0000	178.50	No Ice	7.13	4.96	0.08
			0.00			1/2" Ice	7.66	5.75	0.13
			1.50			1" Ice	8.18	6.47	0.19
						2" Ice	9.26	8.01	0.34
						4" Ice	11.53	11.41	0.75
APXVTM14-C-I20 w/Mount Pipe	C	From Leg	3.00	0.0000	178.50	No Ice	7.13	4.96	0.08
			0.00			1/2" Ice	7.66	5.75	0.13
			1.50			1" Ice	8.18	6.47	0.19
						2" Ice	9.26	8.01	0.34
						4" Ice	11.53	11.41	0.75
TD-RRH8x20-25	A	From Leg	3.00	0.0000	178.50	No Ice	4.72	1.70	0.07
			0.00			1/2" Ice	5.01	1.92	0.10
			-5.00			1" Ice	5.32	2.14	0.13
						2" Ice	5.95	2.62	0.20
						4" Ice	7.31	3.68	0.40
TD-RRH8x20-25	B	From Leg	3.00	0.0000	178.50	No Ice	4.72	1.70	0.07
			0.00			1/2" Ice	5.01	1.92	0.10
			-5.00			1" Ice	5.32	2.14	0.13
						2" Ice	5.95	2.62	0.20
						4" Ice	7.31	3.68	0.40
TD-RRH8x20-25	C	From Leg	3.00	0.0000	178.50	No Ice	4.72	1.70	0.07
			0.00			1/2" Ice	5.01	1.92	0.10
			-5.00			1" Ice	5.32	2.14	0.13
						2" Ice	5.95	2.62	0.20
						4" Ice	7.31	3.68	0.40
APXVSPP18-C-A20 w/Mount Pipe	A	From Leg	3.00	0.0000	178.50	No Ice	8.50	6.95	0.08
			0.00			1/2" Ice	9.15	8.13	0.15
			1.50			1" Ice	9.77	9.02	0.23
						2" Ice	11.03	10.84	0.41
						4" Ice	13.68	14.85	0.91
APXVSPP18-C-A20 w/Mount Pipe	B	From Leg	3.00	0.0000	178.50	No Ice	8.50	6.95	0.08
			0.00			1/2" Ice	9.15	8.13	0.15
			1.50			1" Ice	9.77	9.02	0.23
						2" Ice	11.03	10.84	0.41
						4" Ice	13.68	14.85	0.91
APXVSPP18-C-A20 w/Mount Pipe	C	From Leg	3.00	0.0000	178.50	No Ice	8.50	6.95	0.08
			0.00			1/2" Ice	9.15	8.13	0.15
			1.50			1" Ice	9.77	9.02	0.23
						2" Ice	11.03	10.84	0.41
						4" Ice	13.68	14.85	0.91
1900 MHz RRU	A	From Leg	1.00	0.0000	175.00	No Ice	2.70	2.77	0.06
			0.00			1/2" Ice	2.94	3.01	0.08
			2.00			1" Ice	3.18	3.26	0.11
						2" Ice	3.70	3.78	0.18
						4" Ice	4.85	4.93	0.35

Description	Face or Leg	Offset Type	Offsets: Horz Lateral Vert ft ft ft	Azimuth Adjustment °	Placement ft		C_AA_A Front ft^2	C_AA_A Side ft^2	Weight K
1900 MHz RRU	B	From Leg	1.00	0.0000	175.00	No Ice	2.70	2.77	0.06
			0.00			1/2" Ice	2.94	3.01	0.08
			2.00			1" Ice	3.18	3.26	0.11
						2" Ice	3.70	3.78	0.18
						4" Ice	4.85	4.93	0.35
1900 MHz RRU	C	From Leg	1.00	0.0000	175.00	No Ice	2.70	2.77	0.06
			0.00			1/2" Ice	2.94	3.01	0.08
			2.00			1" Ice	3.18	3.26	0.11
						2" Ice	3.70	3.78	0.18
						4" Ice	4.85	4.93	0.35
800 MHz RRU	A	From Leg	1.00	0.0000	175.00	No Ice	2.49	2.07	0.05
			0.00			1/2" Ice	2.71	2.27	0.07
			-1.50			1" Ice	2.93	2.48	0.10
						2" Ice	3.41	2.93	0.16
						4" Ice	4.46	3.93	0.32
800 MHz RRU	B	From Leg	1.00	0.0000	175.00	No Ice	2.49	2.07	0.05
			0.00			1/2" Ice	2.71	2.27	0.07
			-1.50			1" Ice	2.93	2.48	0.10
						2" Ice	3.41	2.93	0.16
						4" Ice	4.46	3.93	0.32
800 MHz RRU	C	From Leg	1.00	0.0000	175.00	No Ice	2.49	2.07	0.05
			0.00			1/2" Ice	2.71	2.27	0.07
			-1.50			1" Ice	2.93	2.48	0.10
						2" Ice	3.41	2.93	0.16
						4" Ice	4.46	3.93	0.32
800 MHz Filter	A	From Leg	1.00	0.0000	175.00	No Ice	0.78	0.29	0.01
			0.00			1/2" Ice	0.90	0.38	0.01
			-1.50			1" Ice	1.03	0.48	0.02
						2" Ice	1.31	0.70	0.04
						4" Ice	1.99	1.24	0.10
800 MHz Filter	B	From Leg	1.00	0.0000	175.00	No Ice	0.78	0.29	0.01
			0.00			1/2" Ice	0.90	0.38	0.01
			-1.50			1" Ice	1.03	0.48	0.02
						2" Ice	1.31	0.70	0.04
						4" Ice	1.99	1.24	0.10
800 MHz Filter	C	From Leg	1.00	0.0000	175.00	No Ice	0.78	0.29	0.01
			0.00			1/2" Ice	0.90	0.38	0.01
			-1.50			1" Ice	1.03	0.48	0.02
						2" Ice	1.31	0.70	0.04
						4" Ice	1.99	1.24	0.10
(2) ACU-A20-N RET	A	From Leg	1.00	0.0000	175.00	No Ice	0.08	0.14	0.00
			0.00			1/2" Ice	0.12	0.19	0.00
			-1.50			1" Ice	0.17	0.25	0.00
						2" Ice	0.30	0.40	0.01
						4" Ice	0.67	0.80	0.04
ACU-A20-N RET	B	From Leg	1.00	0.0000	175.00	No Ice	0.08	0.14	0.00
			0.00			1/2" Ice	0.12	0.19	0.00
			-1.50			1" Ice	0.17	0.25	0.00
						2" Ice	0.30	0.40	0.01
						4" Ice	0.67	0.80	0.04
ACU-A20-N RET	C	From Leg	1.00	0.0000	175.00	No Ice	0.08	0.14	0.00
			0.00			1/2" Ice	0.12	0.19	0.00
			-1.50			1" Ice	0.17	0.25	0.00
						2" Ice	0.30	0.40	0.01
						4" Ice	0.67	0.80	0.04
(3) T-Frames	C	None		0.0000	178.50	No Ice	30.27	30.27	1.42
						1/2" Ice	41.24	41.24	1.99

Description	Face or Leg	Offset Type	Offsets: Horz Lateral Vert ft ft ft	Azimuth Adjustment °	Placement ft		C_AA_A Front ft^2	C_AA_A Side ft^2	Weight K
						1" Ice	52.21	52.21	2.56
						2" Ice	74.15	74.15	3.69
						4" Ice	118.03	118.03	5.96
Pipe Mount [PM 601-3]	C	None		0.0000	175.00	No Ice	4.39	4.39	0.20
						1/2" Ice	5.48	5.48	0.24
						1" Ice	6.57	6.57	0.28
						2" Ice	8.75	8.75	0.36
						4" Ice	13.11	13.11	0.53
***									
(3) AM-X-CD-14-65-00T w/ Mount Pipe	A	From Leg	3.00 0.00 0.50	0.0000	150.00	No Ice	6.22	4.49	0.06
						1/2" Ice	6.92	5.53	0.11
						1" Ice	7.51	6.29	0.17
						2" Ice	8.71	7.93	0.31
						4" Ice	11.27	11.40	0.70
(3) AM-X-CD-14-65-00T w/ Mount Pipe	B	From Leg	3.00 0.00 0.50	0.0000	150.00	No Ice	6.22	4.49	0.06
						1/2" Ice	6.92	5.53	0.11
						1" Ice	7.51	6.29	0.17
						2" Ice	8.71	7.93	0.31
						4" Ice	11.27	11.40	0.70
(3) AM-X-CD-14-65-00T w/ Mount Pipe	C	From Leg	3.00 0.00 0.50	0.0000	150.00	No Ice	6.22	4.49	0.06
						1/2" Ice	6.92	5.53	0.11
						1" Ice	7.51	6.29	0.17
						2" Ice	8.71	7.93	0.31
						4" Ice	11.27	11.40	0.70
7770 w/Mount Pipe	A	From Leg	3.00 0.00 0.50	0.0000	150.00	No Ice	6.58	4.94	0.07
						1/2" Ice	7.21	5.86	0.12
						1" Ice	7.80	6.64	0.19
						2" Ice	9.01	8.25	0.33
						4" Ice	11.58	11.84	0.75
7770 w/Mount Pipe	B	From Leg	3.00 0.00 0.50	0.0000	150.00	No Ice	6.58	4.94	0.07
						1/2" Ice	7.21	5.86	0.12
						1" Ice	7.80	6.64	0.19
						2" Ice	9.01	8.25	0.33
						4" Ice	11.58	11.84	0.75
7770 w/Mount Pipe	C	From Leg	3.00 0.00 0.50	0.0000	150.00	No Ice	6.58	4.94	0.07
						1/2" Ice	7.21	5.86	0.12
						1" Ice	7.80	6.64	0.19
						2" Ice	9.01	8.25	0.33
						4" Ice	11.58	11.84	0.75
(2) TT19-08BP111-001 TMA	A	From Leg	3.00 0.00 0.50	0.0000	150.00	No Ice	0.00	0.52	0.02
						1/2" Ice	0.00	0.62	0.02
						1" Ice	0.00	0.74	0.03
						2" Ice	0.00	0.99	0.05
						4" Ice	0.00	1.59	0.12
(2) TT19-08BP111-001 TMA	B	From Leg	3.00 0.00 0.50	0.0000	150.00	No Ice	0.00	0.52	0.02
						1/2" Ice	0.00	0.62	0.02
						1" Ice	0.00	0.74	0.03
						2" Ice	0.00	0.99	0.05
						4" Ice	0.00	1.59	0.12
(2) TT19-08BP111-001 TMA	C	From Leg	3.00 0.00 0.50	0.0000	150.00	No Ice	0.00	0.52	0.02
						1/2" Ice	0.00	0.62	0.02
						1" Ice	0.00	0.74	0.03
						2" Ice	0.00	0.99	0.05
						4" Ice	0.00	1.59	0.12
LGP13519 Diplexer	A	From Leg	3.00 0.00 0.50	0.0000	150.00	No Ice	0.34	0.21	0.01
						1/2" Ice	0.42	0.28	0.01
						1" Ice	0.51	0.36	0.01

Description	Face or Leg	Offset Type	Offsets: Horz Lateral Vert ft ft ft	Azimuth Adjustment °	Placement ft		C_AA_A Front ft^2	C_AA_A Side ft^2	Weight K
						2" Ice	0.73	0.55	0.02
						4" Ice	1.25	1.03	0.07
LGP13519 Diplexer	B	From Leg	3.00	0.0000	150.00	No Ice	0.34	0.21	0.01
			0.00			1/2" Ice	0.42	0.28	0.01
			0.50			1" Ice	0.51	0.36	0.01
						2" Ice	0.73	0.55	0.02
						4" Ice	1.25	1.03	0.07
LGP13519 Diplexer	C	From Leg	3.00	0.0000	150.00	No Ice	0.34	0.21	0.01
			0.00			1/2" Ice	0.42	0.28	0.01
			0.50			1" Ice	0.51	0.36	0.01
						2" Ice	0.73	0.55	0.02
						4" Ice	1.25	1.03	0.07
DBC-750	A	From Leg	3.00	0.0000	150.00	No Ice	0.72	0.13	0.01
			0.00			1/2" Ice	0.83	0.19	0.01
			0.50			1" Ice	0.96	0.26	0.02
						2" Ice	1.24	0.43	0.03
						4" Ice	1.90	0.87	0.09
DBC-750	B	From Leg	3.00	0.0000	150.00	No Ice	0.72	0.13	0.01
			0.00			1/2" Ice	0.83	0.19	0.01
			0.50			1" Ice	0.96	0.26	0.02
						2" Ice	1.24	0.43	0.03
						4" Ice	1.90	0.87	0.09
DBC-750	C	From Leg	3.00	0.0000	150.00	No Ice	0.72	0.13	0.01
			0.00			1/2" Ice	0.83	0.19	0.01
			0.50			1" Ice	0.96	0.26	0.02
						2" Ice	1.24	0.43	0.03
						4" Ice	1.90	0.87	0.09
(2) RRUS-11	A	From Leg	3.00	0.0000	150.00	No Ice	2.94	1.25	0.06
			0.00			1/2" Ice	3.17	1.41	0.07
			0.50			1" Ice	3.41	1.59	0.10
						2" Ice	3.91	1.96	0.15
						4" Ice	5.02	2.82	0.30
(2) RRUS-11	B	From Leg	3.00	0.0000	150.00	No Ice	2.94	1.25	0.06
			0.00			1/2" Ice	3.17	1.41	0.07
			0.50			1" Ice	3.41	1.59	0.10
						2" Ice	3.91	1.96	0.15
						4" Ice	5.02	2.82	0.30
(2) RRUS-11	C	From Leg	3.00	0.0000	150.00	No Ice	2.94	1.25	0.06
			0.00			1/2" Ice	3.17	1.41	0.07
			0.50			1" Ice	3.41	1.59	0.10
						2" Ice	3.91	1.96	0.15
						4" Ice	5.02	2.82	0.30
DC6-48-60-18-8F	A	From Leg	3.00	0.0000	150.50	No Ice	1.28	4.32	0.03
			0.00			1/2" Ice	1.40	4.60	0.06
			1.00			1" Ice	1.51	4.88	0.10
						2" Ice	1.75	5.49	0.18
						4" Ice	2.21	6.80	0.40
(3) T-Frames	C	None		0.0000	150.00	No Ice	21.88	21.88	1.07
						1/2" Ice	30.68	30.68	1.48
						1" Ice	39.48	39.48	1.90
						2" Ice	57.08	57.08	2.73
						4" Ice	92.28	92.28	4.40
***									
Sinclair SD312HL	A	From Leg	3.00	0.0000	138.00	No Ice	2.24	2.24	0.01
			0.00			1/2" Ice	2.64	2.64	0.03
			3.50			1" Ice	3.06	3.06	0.05
						2" Ice	3.91	3.91	0.11

Description	Face or Leg	Offset Type	Offsets: Horz Lateral Vert ft ft ft	Azimuth Adjustment °	Placement ft		C_AA_A Front ft^2	C_AA_A Side ft^2	Weight K
						4" Ice	5.72	5.72	0.28
Sinclair SD312HL	B	From Leg	3.00 0.00 3.50	0.0000	138.00	No Ice 1/2" Ice 1" Ice 2" Ice 4" Ice	2.24 2.64 3.06 3.91 5.72	2.24 2.64 3.06 3.91 5.72	0.01 0.03 0.05 0.11 0.28
Sinclair SD312HL	C	From Leg	3.00 0.00 3.50	0.0000	138.00	No Ice 1/2" Ice 1" Ice 2" Ice 4" Ice	2.24 2.64 3.06 3.91 5.72	2.24 2.64 3.06 3.91 5.72	0.01 0.03 0.05 0.11 0.28
(3) Standoffs	C	None		0.0000	138.00	No Ice 1/2" Ice 1" Ice 2" Ice 4" Ice	3.55 6.19 8.83 14.11 24.67	3.55 6.19 8.83 14.11 24.67	0.13 0.19 0.25 0.37 0.61
***									
Pipe Mount	A	From Leg	0.00 0.00 0.00	0.0000	101.00	No Ice 1/2" Ice 1" Ice 2" Ice 4" Ice	0.00 0.00 0.00 0.00 0.00	0.87 1.11 1.36 1.90 3.23	0.02 0.02 0.03 0.06 0.16
***									
(2) LPA-80063/4CF w/ Mount Pipe	A	From Leg	3.00 0.00 1.50	0.0000	161.00	No Ice 1/2" Ice 1" Ice 2" Ice 4" Ice	7.11 7.58 8.07 9.06 11.19	7.13 7.83 8.54 10.02 13.25	0.04 0.10 0.17 0.34 0.79
LPA-80063/4CF w/ Mount Pipe	B	From Leg	3.00 0.00 1.50	0.0000	161.00	No Ice 1/2" Ice 1" Ice 2" Ice 4" Ice	7.11 7.58 8.07 9.06 11.19	7.13 7.83 8.54 10.02 13.25	0.04 0.10 0.17 0.34 0.79
LPA-80063/4CF w/ Mount Pipe	C	From Leg	3.00 0.00 1.50	0.0000	161.00	No Ice 1/2" Ice 1" Ice 2" Ice 4" Ice	7.11 7.58 8.07 9.06 11.19	7.13 7.83 8.54 10.02 13.25	0.04 0.10 0.17 0.34 0.79
LPA-80063/6CF w/ Mount Pipe	B	From Leg	3.00 0.00 1.00	0.0000	161.00	No Ice 1/2" Ice 1" Ice 2" Ice 4" Ice	10.58 11.24 11.87 13.16 15.87	10.67 11.93 12.91 14.92 19.16	0.05 0.14 0.25 0.48 1.09
LPA-80063/6CF w/ Mount Pipe	C	From Leg	3.00 0.00 1.00	0.0000	161.00	No Ice 1/2" Ice 1" Ice 2" Ice 4" Ice	10.58 11.24 11.87 13.16 15.87	10.67 11.93 12.91 14.92 19.16	0.05 0.14 0.25 0.48 1.09
(2) DB-T1-6Z-8AB-0Z	A	From Leg	3.00 0.00 0.00	0.0000	161.00	No Ice 1/2" Ice 1" Ice 2" Ice 4" Ice	5.60 5.92 6.24 6.91 8.37	2.33 2.56 2.79 3.28 4.37	0.04 0.08 0.12 0.21 0.45
(2) DB-T1-6Z-8AB-0Z	B	From Leg	3.00 0.00 0.00	0.0000	161.00	No Ice 1/2" Ice 1" Ice 2" Ice	5.60 5.92 6.24 6.91	2.33 2.56 2.79 3.28	0.04 0.08 0.12 0.21

Description	Face or Leg	Offset Type	Offsets: Horz Lateral Vert ft ft ft	Azimuth Adjustment °	Placement ft		C_AA_A Front ft^2	C_AA_A Side ft^2	Weight K
						4" Ice	8.37	4.37	0.45
(2) DB-T1-6Z-8AB-0Z	C	From Leg	3.00 0.00 0.00	0.0000	161.00	No Ice 1/2" Ice 1" Ice 2" Ice 4" Ice	5.60 5.92 6.24 6.91 8.37	2.33 2.56 2.79 3.28 4.37	0.04 0.08 0.12 0.21 0.45
(3) T-Frames	C	None		0.0000	161.00	No Ice 1/2" Ice 1" Ice 2" Ice 4" Ice	33.11 44.90 56.69 80.27 127.43	33.11 44.90 56.69 80.27 127.43	1.54 2.16 2.78 4.01 6.49
(2) SBNHH-1D65B w/ Mount Pipe	A	From Leg	3.00 0.00 1.00	0.0000	161.00	No Ice 1/2" Ice 1" Ice 2" Ice 4" Ice	8.53 9.18 9.80 11.07 13.72	7.00 8.19 9.08 10.90 14.93	0.08 0.14 0.22 0.40 0.91
(2) SBNHH-1D65B w/ Mount Pipe	B	From Leg	3.00 0.00 1.00	0.0000	161.00	No Ice 1/2" Ice 1" Ice 2" Ice 4" Ice	8.53 9.18 9.80 11.07 13.72	7.00 8.19 9.08 10.90 14.93	0.08 0.14 0.22 0.40 0.91
(2) SBNHH-1D65B w/ Mount Pipe	C	From Leg	3.00 0.00 1.00	0.0000	161.00	No Ice 1/2" Ice 1" Ice 2" Ice 4" Ice	8.53 9.18 9.80 11.07 13.72	7.00 8.19 9.08 10.90 14.93	0.08 0.14 0.22 0.40 0.91
RRH2X60-AWS	A	From Leg	3.00 0.00 1.00	0.0000	161.00	No Ice 1/2" Ice 1" Ice 2" Ice 4" Ice	2.19 2.40 2.61 3.07 4.09	1.43 1.61 1.80 2.21 3.13	0.04 0.06 0.08 0.13 0.26
RRH2X60-AWS	B	From Leg	3.00 0.00 1.00	0.0000	161.00	No Ice 1/2" Ice 1" Ice 2" Ice 4" Ice	2.19 2.40 2.61 3.07 4.09	1.43 1.61 1.80 2.21 3.13	0.04 0.06 0.08 0.13 0.26
RRH2X60-AWS	C	From Leg	3.00 0.00 1.00	0.0000	161.00	No Ice 1/2" Ice 1" Ice 2" Ice 4" Ice	2.19 2.40 2.61 3.07 4.09	1.43 1.61 1.80 2.21 3.13	0.04 0.06 0.08 0.13 0.26
RRH2X60-PCS	A	From Leg	3.00 0.00 1.00	0.0000	161.00	No Ice 1/2" Ice 1" Ice 2" Ice 4" Ice	2.57 2.79 3.02 3.52 4.61	1.93 2.13 2.34 2.80 3.81	0.05 0.07 0.09 0.14 0.30
RRH2X60-PCS	B	From Leg	3.00 0.00 1.00	0.0000	161.00	No Ice 1/2" Ice 1" Ice 2" Ice 4" Ice	2.57 2.79 3.02 3.52 4.61	1.93 2.13 2.34 2.80 3.81	0.05 0.07 0.09 0.14 0.30
RRH2X60-PCS	C	From Leg	3.00 0.00 1.00	0.0000	161.00	No Ice 1/2" Ice 1" Ice 2" Ice 4" Ice	2.57 2.79 3.02 3.52 4.61	1.93 2.13 2.34 2.80 3.81	0.05 0.07 0.09 0.14 0.30
RRH2x60-700	A	From Leg	3.00	0.0000	161.00	No Ice	3.96	1.82	0.06

Description	Face or Leg	Offset Type	Offsets: Horz Lateral ft	Offsets: Vert ft	Azimuth Adjustment °	Placement ft		C_AA_A Front ft^2	C_AA_A Side ft^2	Weight K
			0.00				1/2" Ice	4.27	2.08	0.08
			1.00				1" Ice	4.60	2.36	0.11
							2" Ice	5.27	2.96	0.17
							4" Ice	6.72	4.25	0.35
RRH2x60-700	B	From Leg	3.00	0.00	0.0000	161.00	No Ice	3.96	1.82	0.06
			0.00				1/2" Ice	4.27	2.08	0.08
			1.00				1" Ice	4.60	2.36	0.11
							2" Ice	5.27	2.96	0.17
							4" Ice	6.72	4.25	0.35
RRH2x60-700	C	From Leg	3.00	0.00	0.0000	161.00	No Ice	3.96	1.82	0.06
			0.00				1/2" Ice	4.27	2.08	0.08
			1.00				1" Ice	4.60	2.36	0.11
							2" Ice	5.27	2.96	0.17
							4" Ice	6.72	4.25	0.35
(2) FD9R6004/2CL-3CL Diplexer	A	From Leg	3.00	0.00	0.0000	161.00	No Ice	0.37	0.08	0.00
			0.00				1/2" Ice	0.45	0.14	0.01
			1.00				1" Ice	0.54	0.20	0.01
							2" Ice	0.75	0.34	0.02
							4" Ice	1.28	0.74	0.06
(2) FD9R6004/2CL-3CL Diplexer	B	From Leg	3.00	0.00	0.0000	161.00	No Ice	0.37	0.08	0.00
			0.00				1/2" Ice	0.45	0.14	0.01
			1.00				1" Ice	0.54	0.20	0.01
							2" Ice	0.75	0.34	0.02
							4" Ice	1.28	0.74	0.06
(2) FD9R6004/2CL-3CL Diplexer	C	From Leg	3.00	0.00	0.0000	161.00	No Ice	0.37	0.08	0.00
			0.00				1/2" Ice	0.45	0.14	0.01
			1.00				1" Ice	0.54	0.20	0.01
							2" Ice	0.75	0.34	0.02
							4" Ice	1.28	0.74	0.06
***										

Dishes

Description	Face or Leg	Dish Type	Offset Type	Offsets: Horz Lateral ft	Offsets: Vert ft	Azimuth Adjustment °	3 dB Beam Width °	Elevation ft	Outside Diameter ft		Aperture Area ft^2	Weight K
RDH4518A	A	Paraboloid w/o Radome	From Leg	0.00		0.0000		101.00	2.00	No Ice	3.14	0.03
				0.00						1/2" Ice	3.41	0.04
				1.00						1" Ice	3.68	0.05
										2" Ice	4.21	0.08
										4" Ice	5.28	0.13

Load Combinations

Comb. No.	Description

Comb. No.	Description
1	Dead Only
2	Dead+Wind 0 deg - No Ice
3	Dead+Wind 30 deg - No Ice
4	Dead+Wind 60 deg - No Ice
5	Dead+Wind 90 deg - No Ice
6	Dead+Wind 120 deg - No Ice
7	Dead+Wind 150 deg - No Ice
8	Dead+Wind 180 deg - No Ice
9	Dead+Wind 210 deg - No Ice
10	Dead+Wind 240 deg - No Ice
11	Dead+Wind 270 deg - No Ice
12	Dead+Wind 300 deg - No Ice
13	Dead+Wind 330 deg - No Ice
14	Dead+Ice+Temp
15	Dead+Wind 0 deg+Ice+Temp
16	Dead+Wind 30 deg+Ice+Temp
17	Dead+Wind 60 deg+Ice+Temp
18	Dead+Wind 90 deg+Ice+Temp
19	Dead+Wind 120 deg+Ice+Temp
20	Dead+Wind 150 deg+Ice+Temp
21	Dead+Wind 180 deg+Ice+Temp
22	Dead+Wind 210 deg+Ice+Temp
23	Dead+Wind 240 deg+Ice+Temp
24	Dead+Wind 270 deg+Ice+Temp
25	Dead+Wind 300 deg+Ice+Temp
26	Dead+Wind 330 deg+Ice+Temp
27	Dead+Wind 0 deg - Service
28	Dead+Wind 30 deg - Service
29	Dead+Wind 60 deg - Service
30	Dead+Wind 90 deg - Service
31	Dead+Wind 120 deg - Service
32	Dead+Wind 150 deg - Service
33	Dead+Wind 180 deg - Service
34	Dead+Wind 210 deg - Service
35	Dead+Wind 240 deg - Service
36	Dead+Wind 270 deg - Service
37	Dead+Wind 300 deg - Service
38	Dead+Wind 330 deg - Service

Maximum Member Forces

Section No.	Elevation ft	Component Type	Condition	Gov. Load Comb.	Force K	Major Axis Moment kip-ft	Minor Axis Moment kip-ft
T1	195 - 180	Leg	Max Tension	12	7.04	-0.12	-0.08
			Max. Compression	10	-8.92	0.19	-0.13
			Max. Mx	5	-0.75	0.74	0.00
			Max. My	2	-0.48	-0.01	-0.74
			Max. Vy	11	-0.58	0.41	0.00
			Max. Vx	2	-0.60	-0.01	0.43
		Diagonal	Max Tension	3	1.84	0.00	0.00
			Max. Compression	3	-1.90	0.00	0.00
			Max. Mx	11	0.84	0.01	0.00
			Max. My	9	-1.75	-0.00	-0.00
			Max. Vy	24	-0.01	0.01	0.00
			Max. Vx	9	-0.00	0.00	0.00
		Top Girt	Max Tension	12	0.27	0.00	0.00
			Max. Compression	10	-0.25	0.00	0.00
			Max. Mx	14	0.02	-0.02	0.00

Section No.	Elevation ft	Component Type	Condition	Gov. Load Comb.	Force K	Major Axis Moment kip-ft	Minor Axis Moment kip-ft
			Max. Vy	14	-0.01	0.00	0.00
T2	180 - 160	Leg	Max Tension	12	30.30	-0.35	0.02
			Max. Compression	10	-37.12	0.86	0.01
			Max. Mx	12	30.11	-0.88	0.02
			Max. My	7	-2.32	-0.02	1.05
			Max. Vy	4	1.66	-0.88	-0.01
			Max. Vx	7	1.57	-0.01	-0.52
		Diagonal	Max Tension	3	3.66	0.00	0.00
			Max. Compression	2	-3.73	0.00	0.00
			Max. Mx	9	0.69	0.02	-0.00
			Max. My	13	3.20	0.01	0.00
			Max. Vy	24	-0.01	0.02	0.00
			Max. Vx	13	-0.00	0.00	0.00
		Top Girt	Max Tension	6	0.25	0.00	0.00
			Max. Compression	4	-0.24	0.00	0.00
			Max. Mx	14	0.00	-0.02	0.00
			Max. My	14	0.00	0.00	0.00
			Max. Vy	14	-0.01	0.00	0.00
			Max. Vx	14	-0.00	0.00	0.00
T3	160 - 140	Leg	Max Tension	12	69.22	-0.04	0.00
			Max. Compression	6	-79.76	0.34	0.00
			Max. Mx	12	38.99	-0.88	0.02
			Max. My	13	-3.49	-0.01	0.52
			Max. Vy	12	-1.20	-0.25	-0.01
			Max. Vx	11	-1.03	0.01	0.15
		Diagonal	Max Tension	3	6.40	0.00	0.00
			Max. Compression	9	-6.48	0.00	0.00
			Max. Mx	11	2.52	0.03	0.00
			Max. My	9	-5.60	-0.01	-0.01
			Max. Vy	23	-0.02	0.02	0.00
			Max. Vx	9	0.00	0.00	0.00
T4	140 - 120	Leg	Max Tension	4	105.07	-0.27	-0.00
			Max. Compression	6	-118.08	0.34	0.00
			Max. Mx	12	104.77	-0.35	-0.00
			Max. My	3	-5.48	-0.01	-0.41
			Max. Vy	12	-0.11	-0.32	-0.00
			Max. Vx	3	0.12	-0.01	-0.41
		Diagonal	Max Tension	3	6.72	0.00	0.00
			Max. Compression	9	-6.79	0.00	0.00
			Max. Mx	6	5.56	0.04	0.00
			Max. My	23	1.50	0.04	-0.00
			Max. Vy	17	0.03	0.04	0.00
			Max. Vx	24	0.00	0.00	0.00
T5	120 - 113.333	Leg	Max Tension	4	116.50	-0.35	-0.01
			Max. Compression	6	-130.49	0.48	-0.00
			Max. Mx	10	-130.18	0.48	0.01
			Max. My	3	-6.39	0.00	-0.41
			Max. Vy	12	0.07	-0.47	-0.00
			Max. Vx	3	0.06	0.00	-0.41
		Diagonal	Max Tension	9	6.59	0.00	0.00
			Max. Compression	9	-6.58	0.00	0.00
			Max. Mx	19	1.73	0.04	-0.00
			Max. My	24	1.77	0.04	-0.00
			Max. Vy	17	0.03	0.04	0.00
			Max. Vx	24	0.00	0.00	0.00
T6	113.333 - 106.667	Leg	Max Tension	4	127.20	-0.47	-0.01
			Max. Compression	6	-142.12	0.62	0.02
			Max. Mx	8	126.63	-0.63	0.01
			Max. My	9	-6.44	-0.00	0.64
			Max. Vy	8	0.07	-0.63	0.01

Section No.	Elevation ft	Component Type	Condition	Gov. Load Comb.	Force K	Major Axis Moment kip-ft	Minor Axis Moment kip-ft
			Max. Vx	9	-0.09	-0.00	0.64
		Diagonal	Max Tension	9	6.57	0.00	0.00
			Max. Compression	9	-6.61	0.00	0.00
			Max. Mx	19	1.63	0.04	0.01
			Max. My	19	-1.82	0.03	0.01
			Max. Vy	17	0.03	0.04	0.01
			Max. Vx	19	-0.00	0.00	0.00
T7	106.667 - 100	Leg	Max Tension	4	137.67	-0.62	0.00
			Max. Compression	6	-153.65	0.54	0.02
			Max. Mx	8	137.18	-0.63	0.01
			Max. My	9	-6.65	-0.00	0.64
			Max. Vy	8	-0.08	-0.63	0.01
			Max. Vx	9	0.08	-0.00	0.64
		Diagonal	Max Tension	9	6.71	0.00	0.00
			Max. Compression	9	-6.72	0.00	0.00
			Max. Mx	19	1.70	0.06	0.01
			Max. My	26	-1.98	0.04	-0.01
			Max. Vy	17	0.04	0.06	0.01
			Max. Vx	26	0.00	0.00	0.00
T8	100 - 80	Leg	Max Tension	4	167.35	-0.69	-0.00
			Max. Compression	6	-186.63	0.94	0.01
			Max. Mx	12	166.63	-0.99	-0.01
			Max. My	9	-8.12	-0.04	1.01
			Max. Vy	12	0.10	-0.99	-0.01
			Max. Vx	9	-0.13	-0.04	1.01
		Diagonal	Max Tension	13	7.03	0.00	0.00
			Max. Compression	13	-7.01	0.00	0.00
			Max. Mx	19	1.90	0.07	0.01
			Max. My	26	-2.03	0.05	-0.01
			Max. Vy	17	0.04	0.07	-0.01
			Max. Vx	26	0.00	0.00	0.00
T9	80 - 70	Leg	Max Tension	4	178.94	-0.99	-0.01
			Max. Compression	6	-199.62	0.92	0.01
			Max. Mx	12	178.34	-0.99	-0.01
			Max. My	3	-9.09	0.00	-1.05
			Max. Vy	12	-0.09	-0.99	-0.01
			Max. Vx	3	0.09	0.00	-1.05
		Diagonal	Max Tension	13	7.90	0.00	0.00
			Max. Compression	13	-7.99	0.00	0.00
			Max. Mx	17	1.71	0.10	-0.01
			Max. My	26	-2.46	0.08	-0.01
			Max. Vy	17	0.05	0.10	-0.01
			Max. Vx	26	0.00	0.00	0.00
T10	70 - 60	Leg	Max Tension	4	192.84	-0.89	-0.01
			Max. Compression	6	-215.60	0.73	0.00
			Max. Mx	10	-214.55	0.93	0.01
			Max. My	3	-9.55	0.00	-1.05
			Max. Vy	12	-0.09	-0.89	-0.01
			Max. Vx	9	0.12	0.00	1.05
		Diagonal	Max Tension	13	8.16	0.00	0.00
			Max. Compression	13	-8.19	0.00	0.00
			Max. Mx	17	1.84	0.13	0.02
			Max. My	26	-2.34	0.11	-0.02
			Max. Vy	17	0.06	0.13	0.02
			Max. Vx	26	0.00	0.00	0.00
T11	60 - 50	Leg	Max Tension	4	205.97	-0.78	-0.01
			Max. Compression	6	-230.76	1.87	0.02
			Max. Mx	10	-229.86	1.87	0.01
			Max. My	3	-10.69	0.01	-1.89
			Max. Vy	10	-0.20	1.87	0.01
			Max. Vx	9	-0.22	0.00	1.89

Section No.	Elevation ft	Component Type	Condition	Gov. Load Comb.	Force K	Major Axis Moment kip-ft	Minor Axis Moment kip-ft
		Diagonal	Max Tension	13	8.17	0.00	0.00
			Max. Compression	13	-8.19	0.00	0.00
			Max. Mx	17	1.61	0.13	0.01
			Max. My	26	-2.61	0.11	-0.02
			Max. Vy	17	0.06	0.13	0.01
			Max. Vx	26	0.00	0.00	0.00
T12	50 - 40	Leg	Max Tension	4	218.94	-1.80	-0.01
			Max. Compression	6	-245.71	1.14	0.00
			Max. Mx	10	-244.50	1.87	0.01
			Max. My	3	-11.10	0.01	-1.89
			Max. Vy	23	0.19	1.08	-0.00
			Max. Vx	9	0.19	0.00	1.89
		Diagonal	Max Tension	13	8.59	0.00	0.00
			Max. Compression	13	-8.69	0.00	0.00
			Max. Mx	17	2.13	0.15	0.02
			Max. My	26	-2.31	0.13	-0.02
			Max. Vy	17	0.07	0.15	0.02
			Max. Vx	26	0.00	0.00	0.00
T13	40 - 20	Leg	Max Tension	4	243.98	-1.35	-0.01
			Max. Compression	6	-274.92	1.55	0.01
			Max. Mx	25	43.06	-3.49	-0.00
			Max. My	3	-12.34	-0.05	-1.89
			Max. Vy	25	0.52	-3.49	-0.00
			Max. Vx	3	-0.21	-0.05	-1.89
		Diagonal	Max Tension	13	8.89	0.00	0.00
			Max. Compression	13	-9.04	0.00	0.00
			Max. Mx	17	1.26	0.17	-0.02
			Max. My	15	2.93	0.15	-0.02
			Max. Vy	17	0.07	0.15	0.02
			Max. Vx	15	0.00	0.00	0.00
T14	20 - 10	Leg	Max Tension	4	256.54	-1.43	-0.01
			Max. Compression	6	-289.97	1.36	0.00
			Max. Mx	19	-107.31	4.65	-0.01
			Max. My	5	-13.15	-0.10	2.61
			Max. Vy	25	-0.77	-3.49	-0.00
			Max. Vx	3	0.28	-0.10	-2.61
		Diagonal	Max Tension	13	9.08	0.00	0.00
			Max. Compression	13	-9.01	0.00	0.00
			Max. Mx	17	0.02	0.24	-0.02
			Max. My	20	-4.41	0.22	0.02
			Max. Vy	17	0.08	0.24	-0.02
			Max. Vx	20	-0.00	0.00	0.00
T15	10 - 0	Leg	Max Tension	4	267.85	-1.51	-0.01
			Max. Compression	6	-303.30	0.00	0.00
			Max. Mx	19	-115.09	4.65	-0.01
			Max. My	5	-13.45	-0.10	2.61
			Max. Vy	19	0.47	4.65	-0.01
			Max. Vx	5	0.36	-0.10	2.61
		Diagonal	Max Tension	13	9.39	0.00	0.00
			Max. Compression	13	-9.59	0.00	0.00
			Max. Mx	6	7.50	0.17	0.02
			Max. My	16	4.99	0.13	-0.03
			Max. Vy	18	0.08	0.14	0.03
			Max. Vx	16	0.00	0.00	0.00

Maximum Reactions

Location	Condition	Gov. Load Comb.	Vertical K	Horizontal, X K	Horizontal, Z K
Leg C	Max. Vert	10	309.11	27.77	-15.98
	Max. H_x	10	309.11	27.77	-15.98
	Max. H_z	4	-273.60	-24.77	14.26
	Min. Vert	4	-273.60	-24.77	14.26
	Min. H_x	4	-273.60	-24.77	14.26
	Min. H_z	10	309.11	27.77	-15.98
Leg B	Max. Vert	6	310.25	-27.71	-16.13
	Max. H_x	12	-272.46	24.69	14.36
	Max. H_z	12	-272.46	24.69	14.36
	Min. Vert	12	-272.46	24.69	14.36
	Min. H_x	6	310.25	-27.71	-16.13
	Min. H_z	6	310.25	-27.71	-16.13
Leg A	Max. Vert	2	309.03	0.16	31.99
	Max. H_x	11	14.10	3.17	1.15
	Max. H_z	2	309.03	0.16	31.99
	Min. Vert	8	-272.82	-0.13	-28.56
	Min. H_x	5	14.10	-3.14	1.15
	Min. H_z	8	-272.82	-0.13	-28.56

Tower Mast Reaction Summary

Load Combination	Vertical K	$Shear_x$ K	$Shear_z$ K	Overturning Moment, M_x kip-ft	Overturning Moment, M_z kip-ft	Torque kip-ft
Dead Only	42.31	0.00	0.00	0.13	-13.13	0.00
Dead+Wind 0 deg - No Ice	42.31	0.00	-51.17	-5874.61	-13.13	6.06
Dead+Wind 30 deg - No Ice	42.31	24.87	-42.99	-4979.57	-2896.19	4.17
Dead+Wind 60 deg - No Ice	42.31	42.62	-24.57	-2854.47	-4969.17	1.58
Dead+Wind 90 deg - No Ice	42.31	49.71	-0.00	0.02	-5775.26	-1.32
Dead+Wind 120 deg - No Ice	42.31	44.36	25.68	2947.73	-5109.47	-4.10
Dead+Wind 150 deg - No Ice	42.31	24.84	43.06	4986.96	-2892.34	-5.49
Dead+Wind 180 deg - No Ice	42.31	0.00	49.19	5715.13	-13.13	-5.66
Dead+Wind 210 deg - No Ice	42.31	-24.84	43.06	4986.96	2866.07	-4.48
Dead+Wind 240 deg - No Ice	42.31	-44.36	25.68	2947.73	5083.20	-1.95
Dead+Wind 270 deg - No Ice	42.31	-49.71	-0.00	0.02	5748.99	1.32
Dead+Wind 300 deg - No Ice	42.31	-42.62	-24.57	-2854.47	4942.90	4.08
Dead+Wind 330 deg - No Ice	42.31	-24.87	-42.99	-4979.57	2869.92	5.80
Dead+Ice+Temp	85.81	0.00	0.00	-2.79	-32.17	-0.00
Dead+Wind 0 deg+Ice+Temp	85.81	0.00	-14.87	-1713.38	-32.17	2.40
Dead+Wind 30 deg+Ice+Temp	85.81	6.93	-11.98	-1397.98	-839.27	1.49
Dead+Wind 60 deg+Ice+Temp	85.81	11.70	-6.74	-791.78	-1401.01	0.41
Dead+Wind 90 deg+Ice+Temp	85.81	13.85	-0.00	-2.81	-1645.48	-0.71
Dead+Wind 120 deg+Ice+Temp	85.81	12.88	7.46	854.80	-1515.16	-1.82
Dead+Wind 150 deg+Ice+Temp	85.81	6.92	11.99	1394.00	-838.41	-2.20
Dead+Wind 180 deg+Ice+Temp	85.81	0.00	13.50	1576.50	-32.17	-2.09
Dead+Wind 210 deg+Ice+Temp	85.81	-6.92	11.99	1394.00	774.07	-1.56
Dead+Wind 240 deg+Ice+Temp	85.81	-12.88	7.46	854.80	1450.82	-0.57
Dead+Wind 270 deg+Ice+Temp	85.81	-13.85	-0.00	-2.81	1581.13	0.71
Dead+Wind 300 deg+Ice+Temp	85.81	-11.70	-6.74	-791.78	1336.67	1.68
Dead+Wind 330 deg+Ice+Temp	85.81	-6.93	-11.98	-1397.98	774.93	2.27
Dead+Wind 0 deg - Service	42.31	0.00	-17.70	-2032.65	-13.13	2.10
Dead+Wind 30 deg - Service	42.31	8.61	-14.87	-1722.95	-1010.73	1.44
Dead+Wind 60 deg - Service	42.31	14.75	-8.50	-987.62	-1728.02	0.55
Dead+Wind 90 deg - Service	42.31	17.20	-0.00	0.09	-2006.95	-0.46
Dead+Wind 120 deg - Service	42.31	15.35	8.89	1020.06	-1776.57	-1.42
Dead+Wind 150 deg - Service	42.31	8.59	14.90	1725.68	-1009.40	-1.90
Dead+Wind 180 deg - Service	42.31	0.00	17.02	1977.64	-13.13	-1.96

Load Combination	Vertical K	$Shear_x$ K	$Shear_z$ K	Overturning Moment, M_x kip-ft	Overturning Moment, M_z kip-ft	Torque kip-ft
Dead+Wind 210 deg - Service	42.31	-8.59	14.90	1725.68	983.13	-1.55
Dead+Wind 240 deg - Service	42.31	-15.35	8.89	1020.06	1750.30	-0.68
Dead+Wind 270 deg - Service	42.31	-17.20	-0.00	0.09	1980.68	0.46
Dead+Wind 300 deg - Service	42.31	-14.75	-8.50	-987.62	1701.76	1.41
Dead+Wind 330 deg - Service	42.31	-8.61	-14.87	-1722.95	984.46	2.01

Solution Summary

	Sum of Applied Forces			Sum of Reactions			
Load Comb.	PX K	PY K	PZ K	PX K	PY K	PZ K	% Error
1	0.00	-42.31	0.00	0.00	42.31	0.00	0.000%
2	0.00	-42.31	-51.17	0.00	42.31	51.17	0.000%
3	24.87	-42.31	-42.99	-24.87	42.31	42.99	0.000%
4	42.62	-42.31	-24.57	-42.62	42.31	24.57	0.000%
5	49.71	-42.31	-0.00	-49.71	42.31	0.00	0.000%
6	44.36	-42.31	25.68	-44.36	42.31	-25.68	0.000%
7	24.84	-42.31	43.06	-24.84	42.31	-43.06	0.000%
8	0.00	-42.31	49.19	0.00	42.31	-49.19	0.000%
9	-24.84	-42.31	43.06	24.84	42.31	-43.06	0.000%
10	-44.36	-42.31	25.68	44.36	42.31	-25.68	0.000%
11	-49.71	-42.31	-0.00	49.71	42.31	0.00	0.000%
12	-42.62	-42.31	-24.57	42.62	42.31	24.57	0.000%
13	-24.87	-42.31	-42.99	24.87	42.31	42.99	0.000%
14	0.00	-85.81	0.00	0.00	85.81	0.00	0.000%
15	0.00	-85.81	-14.87	0.00	85.81	14.87	0.000%
16	6.93	-85.81	-11.98	-6.93	85.81	11.98	0.000%
17	11.70	-85.81	-6.74	-11.70	85.81	6.74	0.000%
18	13.85	-85.81	-0.00	-13.85	85.81	0.00	0.000%
19	12.88	-85.81	7.46	-12.88	85.81	-7.46	0.000%
20	6.92	-85.81	11.99	-6.92	85.81	-11.99	0.000%
21	0.00	-85.81	13.50	0.00	85.81	-13.50	0.000%
22	-6.92	-85.81	11.99	6.92	85.81	-11.99	0.000%
23	-12.88	-85.81	7.46	12.88	85.81	-7.46	0.000%
24	-13.85	-85.81	-0.00	13.85	85.81	0.00	0.000%
25	-11.70	-85.81	-6.74	11.70	85.81	6.74	0.000%
26	-6.93	-85.81	-11.98	6.93	85.81	11.98	0.000%
27	0.00	-42.31	-17.70	0.00	42.31	17.70	0.000%
28	8.61	-42.31	-14.87	-8.61	42.31	14.87	0.000%
29	14.75	-42.31	-8.50	-14.75	42.31	8.50	0.000%
30	17.20	-42.31	-0.00	-17.20	42.31	0.00	0.000%
31	15.35	-42.31	8.89	-15.35	42.31	-8.89	0.000%
32	8.59	-42.31	14.90	-8.59	42.31	-14.90	0.000%
33	0.00	-42.31	17.02	-0.00	42.31	-17.02	0.000%
34	-8.59	-42.31	14.90	8.59	42.31	-14.90	0.000%
35	-15.35	-42.31	8.89	15.35	42.31	-8.89	0.000%
36	-17.20	-42.31	-0.00	17.20	42.31	0.00	0.000%
37	-14.75	-42.31	-8.50	14.75	42.31	8.50	0.000%
38	-8.61	-42.31	-14.87	8.61	42.31	14.87	0.000%

Maximum Tower Deflections - Service Wind

Section No.	Elevation ft	Horz. Deflection in	Gov. Load Comb.	Tilt °	Twist °
T1	195 - 180	7.754	31	0.3760	0.0132
T2	180 - 160	6.576	31	0.3631	0.0114
T3	160 - 140	5.095	31	0.3257	0.0055
T4	140 - 120	3.783	31	0.2715	0.0021
T5	120 - 113.333	2.704	31	0.2200	0.0017
T6	113.333 - 106.667	2.391	31	0.2064	0.0018
T7	106.667 - 100	2.097	31	0.1924	0.0019
T8	100 - 80	1.825	31	0.1778	0.0020
T9	80 - 70	1.136	31	0.1281	0.0017
T10	70 - 60	0.868	31	0.1111	0.0015
T11	60 - 50	0.641	31	0.0938	0.0014
T12	50 - 40	0.446	31	0.0763	0.0012
T13	40 - 20	0.291	31	0.0586	0.0010
T14	20 - 10	0.084	31	0.0232	0.0005
T15	10 - 0	0.028	35	0.0116	0.0003

Critical Deflections and Radius of Curvature - Service Wind

Elevation ft	Appurtenance	Gov. Load Comb.	Deflection in	Tilt °	Twist °	Radius of Curvature ft
195.00	Lightning Rod	31	7.754	0.3760	0.0132	125791
192.00	AIR 21 B2A/B4P w/ Mount Pipe	31	7.517	0.3739	0.0130	125791
178.50	APXVTM14-C-I20 w/Mount Pipe	31	6.460	0.3612	0.0111	41174
178.00	PD1151	31	6.422	0.3605	0.0110	40564
175.00	1900 MHz RRU	31	6.193	0.3561	0.0102	37953
161.00	(2) LPA-80063/4CF w/ Mount Pipe	31	5.166	0.3281	0.0058	29784
150.50	DC6-48-60-18-8F	31	4.445	0.3010	0.0034	22882
150.00	(3) AM-X-CD-14-65-00T w/ Mount Pipe	31	4.412	0.2996	0.0033	22614
138.00	Sinclair SD312HL	31	3.664	0.2659	0.0020	18872
102.00	RDH4518A	31	1.904	0.1824	0.0020	24771
101.00	Pipe Mount	31	1.864	0.1801	0.0020	25652

Maximum Tower Deflections - Design Wind

Section No.	Elevation ft	Horz. Deflection in	Gov. Load Comb.	Tilt °	Twist °
T1	195 - 180	22.358	6	1.0859	0.0381
T2	180 - 160	18.954	6	1.0481	0.0330
T3	160 - 140	14.681	6	0.9392	0.0160
T4	140 - 120	10.897	6	0.7823	0.0061
T5	120 - 113.333	7.791	6	0.6336	0.0049
T6	113.333 - 106.667	6.889	6	0.5944	0.0052
T7	106.667 - 100	6.040	6	0.5540	0.0056
T8	100 - 80	5.257	6	0.5119	0.0057
T9	80 - 70	3.273	6	0.3688	0.0049
T10	70 - 60	2.500	6	0.3199	0.0044
T11	60 - 50	1.848	6	0.2699	0.0040
T12	50 - 40	1.285	6	0.2197	0.0035
T13	40 - 20	0.838	6	0.1688	0.0029

Section No.	Elevation ft	Horz. Deflection in	Gov. Load Comb.	Tilt °	Twist °
T14	20 - 10	0.241	6	0.0668	0.0015
T15	10 - 0	0.081	10	0.0333	0.0007

Critical Deflections and Radius of Curvature - Design Wind

Elevation ft	Appurtenance	Gov. Load Comb.	Deflection in	Tilt °	Twist °	Radius of Curvature ft
195.00	Lightning Rod	6	22.358	1.0859	0.0381	44109
192.00	AIR 21 B2A/B4P w/ Mount Pipe	6	21.671	1.0799	0.0375	44109
178.50	APXVTM14-C-I20 w/Mount Pipe	6	18.620	1.0424	0.0320	14423
178.00	PD1151	6	18.510	1.0405	0.0317	14206
175.00	1900 MHz RRU	6	17.850	1.0276	0.0294	13273
161.00	(2) LPA-80063/4CF w/ Mount Pipe	6	14.884	0.9462	0.0168	10360
150.50	DC6-48-60-18-8F	6	12.807	0.8676	0.0098	7932
150.00	(3) AM-X-CD-14-65-00T w/ Mount Pipe	6	12.712	0.8636	0.0096	7838
138.00	Sinclair SD312HL	6	10.556	0.7660	0.0056	6535
102.00	RDH4518A	6	5.485	0.5251	0.0057	8599
101.00	Pipe Mount	6	5.371	0.5186	0.0057	8907

Bolt Design Data

Section No.	Elevation ft	Component Type	Bolt Grade	Bolt Size in	Number Of Bolts	Maximum Load per Bolt K	Allowable Load K	Ratio Load / Allowable	Allowable Ratio	Criteria
T1	195	Diagonal	A325X	0.6250	1	1.84	4.89	0.375 ✔	1.333	Member Block Shear
		Top Girt	A325X	0.6250	1	0.27	4.89	0.056 ✔	1.333	Member Block Shear
T2	180	Diagonal	A325X	0.6250	1	3.66	4.89	0.749 ✔	1.333	Member Block Shear
		Top Girt	A325X	0.6250	1	0.25	4.89	0.051 ✔	1.333	Member Block Shear
T3	160	Diagonal	A325X	0.6250	1	6.40	5.57	1.148 ✔	1.333	Member Block Shear
T4	140	Diagonal	A325X	0.6250	1	6.72	6.80	0.989 ✔	1.333	Member Bearing
T5	120	Diagonal	A325X	0.6250	1	6.59	6.80	0.970 ✔	1.333	Member Bearing
T6	113.333	Diagonal	A325X	0.6250	1	6.57	6.80	0.966 ✔	1.333	Member Bearing
T7	106.667	Diagonal	A325X	0.6250	1	6.71	9.06	0.740 ✔	1.333	Member Bearing
T8	100	Diagonal	A325X	0.7500	1	7.03	6.80	1.034 ✔	1.333	Member Bearing
T9	80	Diagonal	A325X	0.7500	1	7.90	9.06	0.871 ✔	1.333	Member Bearing
T10	70	Diagonal	A325X	0.7500	1	8.19	13.25	0.618 ✔	1.333	Bolt Shear
T11	60	Diagonal	A325X	0.7500	1	8.17	9.06	0.901 ✔	1.333	Member Bearing
T12	50	Diagonal	A325X	0.7500	1	8.69	13.25	0.656 ✔	1.333	Bolt Shear
T13	40	Diagonal	A325X	0.7500	1	8.89	9.06	0.981 ✔	1.333	Member Bearing

Section No.	Elevation ft	Component Type	Bolt Grade	Bolt Size in	Number Of Bolts	Maximum Load per Bolt K	Allowable Load K	Ratio Load / Allowable	Allowable Ratio	Criteria
T14	20	Leg	A572-50	1.5000	8	32.07	37.91	0.846 ✔	1.333	Bolt Tension
		Diagonal	A325X	0.7500	1	9.08	9.06	1.002 ✔	1.333	Member Bearing
T15	10	Leg	A572-50	1.5000	8	33.48	37.91	0.883 ✔	1.333	Bolt Tension
		Diagonal	A325X	0.7500	1	9.39	9.06	1.036 ✔	1.333	Member Bearing

Compression Checks

Leg Design Data (Compression)

Section No.	Elevation ft	Size	L ft	L_u ft	Kl/r	F_a ksi	A in^2	Actual P K	Allow. P_a K	Ratio P / P_a
T1	195 - 180	P2x.154 (2.38 OD)	15.00	5.00	76.2 K=1.00	19.756	1.0745	-8.92	21.23	0.420 ✔
T2	180 - 160	P3x.216 (3.5 OD)	20.03	5.01	51.7 K=1.00	24.091	2.2285	-37.12	53.69	0.691 ✔
T3	160 - 140	P3x.300 (3.50 OD)	20.03	5.01	52.9 K=1.00	23.894	3.0159	-79.76	72.06	1.107 ✔
T4	140 - 120	P4x.337 (4.50 OD)	20.03	6.68	54.3 K=1.00	23.672	4.4074	-118.08	104.33	1.132 ✔
T5	120 - 113.333	P5x.375 (5.5625 OD)	6.68	6.68	43.6 K=1.00	25.320	6.1114	-130.49	154.74	0.843 ✔
T6	113.333 - 106.667	P5x.375 (5.5625 OD)	6.68	6.68	43.6 K=1.00	25.320	6.1114	-142.12	154.74	0.918 ✔
T7	106.667 - 100	P5x.375 (5.5625 OD)	6.68	6.68	43.6 K=1.00	25.320	6.1114	-153.65	154.74	0.993 ✔
T8	100 - 80	P6x.28 (6.625 OD)	20.03	6.68	35.7 K=1.00	26.422	5.5813	-186.63	147.47	1.266 ✔
T9	80 - 70	P6x.432 (6.625 OD)	10.02	10.02	54.8 K=1.00	23.591	8.4049	-199.62	198.28	1.007 ✔
T10	70 - 60	P6x.432 (6.625 OD)	10.02	10.02	54.8 K=1.00	23.591	8.4049	-215.60	198.28	1.087 ✔
T11	60 - 50	P8x.322 (8.625 OD)	10.02	10.02	40.9 K=1.00	25.703	8.3993	-230.76	215.89	1.069 ✔
T12	50 - 40	P8x.322 (8.625 OD)	10.02	10.02	40.9 K=1.00	25.703	8.3993	-245.71	215.89	1.138 ✔
T13	40 - 20	P8x.322 (8.625 OD)	20.03	10.02	40.9 K=1.00	25.703	8.3993	-274.92	215.89	1.273 ✔
T14	20 - 10	P8x.5 (8.625 OD)	10.02	10.02	41.8 K=1.00	25.582	12.7627	-289.97	326.50	0.888 ✔
T15	10 - 0	P8x.5 (8.625 OD)	10.02	10.02	41.8 K=1.00	25.582	12.7627	-303.30	326.50	0.929 ✔

Diagonal Design Data (Compression)

Section No.	Elevation ft	Size	L ft	L_u ft	Kl/r	F_a ksi	A in^2	Actual P K	Allow. P_a K	Ratio $\frac{P}{P_a}$
T1	195 - 180	L1 3/4x1 3/4x3/16	7.07	3.25	115.2 K=1.01	10.966	0.6211	-1.90	6.81	0.279 ✔
T2	180 - 160	L1 3/4x1 3/4x3/16	8.40	4.03	140.8 K=1.00	7.536	0.6211	-3.73	4.68	0.798 ✔
T3	160 - 140	L2x2x3/16	10.08	4.87	148.3 K=1.00	6.789	0.7150	-6.25	4.85	1.288 ✔
T4	140 - 120	L2 1/2x2 1/2x3/16	12.58	6.12	148.4 K=1.00	6.785	0.9020	-6.63	6.12	1.084 ✔
T5	120 - 113.333	L2 1/2x2 1/2x3/16	13.15	6.35	154.0 K=1.00	6.294	0.9020	-6.58	5.68	1.160 ✔
T6	113.333 - 106.667	L2 1/2x2 1/2x3/16	13.73	6.64	161.1 K=1.00	5.756	0.9020	-6.61	5.19	1.273 ✔
T7	106.667 - 100	L2 1/2x2 1/2x1/4	14.32	6.94	169.6 K=1.00	5.193	1.1900	-6.72	6.18	1.087 ✔
T8	100 - 80	L3x3x3/16	16.11	7.79	156.8 K=1.00	6.070	1.0900	-7.01	6.62	1.059 ✔
T9	80 - 70	L3x3x1/4	18.45	9.05	183.4 K=1.00	4.440	1.4400	-7.99	6.39	1.250 ✔
T10	70 - 60	L3x3x3/8	19.30	9.47	193.6 K=1.00	3.983	2.1100	-8.19	8.40	0.974 ✔
T11	60 - 50	L3x3 1/2x1/4	20.16	9.81	186.5 K=1.00	4.293	1.5600	-8.19	6.70	1.222 ✔
T12	50 - 40	L3x3x3/8	21.03	10.25	209.5 K=1.00	3.404	2.1100	-8.69	7.18	1.210 ✔
T13	40 - 20	KL/R > 200 (C) - 184 L3 1/2x3 1/2x1/4	22.81	11.14	192.6 K=1.00	4.026	1.6900	-9.04	6.80	1.329 ✔
T14	20 - 10	L3 1/2x4x1/4	23.71	11.59	189.5 K=1.00	4.159	1.8100	-9.01	7.53	1.196 ✔
T15	10 - 0	L4x4x1/4	24.62	12.05	181.8 K=1.00	4.517	1.9400	-9.59	8.76	1.095 ✔

Top Girt Design Data (Compression)

Section No.	Elevation ft	Size	L ft	L_u ft	Kl/r	F_a ksi	A in^2	Actual P K	Allow. P_a K	Ratio $\frac{P}{P_a}$
T1	195 - 180	L1 3/4x1 3/4x3/16	5.00	4.51	157.6 K=1.00	6.013	0.6211	-0.25	3.73	0.066 ✔
T2	180 - 160	L1 3/4x1 3/4x3/16	5.00	4.51	157.6 K=1.00	6.013	0.6211	-0.24	3.73	0.065 ✔

Tension Checks

Leg Design Data (Tension)

Section No.	Elevation ft	Size	L ft	L_u ft	Kl/r	F_a ksi	A in^2	Actual P K	Allow. P_a K	Ratio $\frac{P}{P_a}$
T1	195 - 180	P2x.154 (2.38 OD)	15.00	5.00	76.2	30.000	1.0745	7.04	32.24	0.218 ✓
T2	180 - 160	P3x.216 (3.5 OD)	20.03	5.01	51.7	30.000	2.2285	30.30	66.85	0.453 ✓
T3	160 - 140	P3x.300 (3.50 OD)	20.03	5.01	52.9	30.000	3.0159	69.22	90.48	0.765 ✓
T4	140 - 120	P4x.337 (4.50 OD)	20.03	6.68	54.3	30.000	4.4074	105.07	132.22	0.795 ✓
T5	120 - 113.333	P5x.375 (5.5625 OD)	6.68	6.68	43.6	30.000	6.1114	116.50	183.34	0.635 ✓
T6	113.333 - 106.667	P5x.375 (5.5625 OD)	6.68	6.68	43.6	30.000	6.1114	127.20	183.34	0.694 ✓
T7	106.667 - 100	P5x.375 (5.5625 OD)	6.68	6.68	43.6	30.000	6.1114	137.67	183.34	0.751 ✓
T8	100 - 80	P6x.28 (6.625 OD)	20.03	6.68	35.7	30.000	5.5813	167.35	167.44	0.999 ✓
T9	80 - 70	P6x.432 (6.625 OD)	10.02	10.02	54.8	30.000	8.4049	178.94	252.15	0.710 ✓
T10	70 - 60	P6x.432 (6.625 OD)	10.02	10.02	54.8	30.000	8.4049	192.84	252.15	0.765 ✓
T11	60 - 50	P8x.322 (8.625 OD)	10.02	10.02	40.9	30.000	8.3993	205.97	251.98	0.817 ✓
T12	50 - 40	P8x.322 (8.625 OD)	10.02	10.02	40.9	30.000	8.3993	218.94	251.98	0.869 ✓
T13	40 - 20	P8x.322 (8.625 OD)	20.03	10.02	40.9	30.000	8.3993	243.98	251.98	0.968 ✓
T14	20 - 10	P8x.5 (8.625 OD)	10.02	10.02	41.8	30.000	12.7627	256.54	382.88	0.670 ✓
T15	10 - 0	P8x.5 (8.625 OD)	10.02	10.02	41.8	30.000	12.7627	267.85	382.88	0.700 ✓

Diagonal Design Data (Tension)

Section No.	Elevation ft	Size	L ft	L_u ft	Kl/r	F_a ksi	A in^2	Actual P K	Allow. P_a K	Ratio $\frac{P}{P_a}$
T1	195 - 180	L1 3/4x1 3/4x3/16	7.07	3.25	75.9	29.000	0.3604	1.84	10.45	0.176 ✓
T2	180 - 160	L1 3/4x1 3/4x3/16	8.40	4.03	93.3	29.000	0.3604	3.66	10.45	0.351 ✓
T3	160 - 140	L2x2x3/16	9.65	4.66	93.4	29.000	0.4308	6.40	12.49	0.512 ✓
T4	140 - 120	L2 1/2x2 1/2x3/16	11.47	5.57	88.2	29.000	0.5710	6.72	16.56	0.406 ✓
T5	120 - 113.333	L2 1/2x2 1/2x3/16	13.15	6.35	100.3	29.000	0.5710	6.59	16.56	0.398 ✓

Section No.	Elevation ft	Size	L ft	L_u ft	Kl/r	F_a ksi	A in^2	Actual P K	Allow. P_a K	Ratio $\frac{P}{P_a}$
T6	113.333 - 106.667	L2 1/2x2 1/2x3/16	13.73	6.64	104.7	29.000	0.5710	6.57	16.56	0.397 ✔
T7	106.667 - 100	L2 1/2x2 1/2x1/4	14.32	6.94	110.5	29.000	0.7519	6.71	21.80	0.308 ✔
T8	100 - 80	L3x3x3/16	16.11	7.79	101.4	29.000	0.6945	7.03	20.14	0.349 ✔
T9	80 - 70	L3x3x1/4	18.45	9.05	118.6	29.000	0.9159	7.90	26.56	0.297 ✔
T10	70 - 60	L3x3x3/8	19.30	9.47	126.4	29.000	1.3364	8.16	38.76	0.210 ✔
T11	60 - 50	L3x3 1/2x1/4	20.16	9.81	130.8	29.000	1.0059	8.17	29.17	0.280 ✔
T12	50 - 40	L3x3x3/8	21.03	10.25	136.6	29.000	1.3364	8.59	38.76	0.222 ✔
T13	40 - 20	L3 1/2x3 1/2x1/4	22.81	11.14	124.2	29.000	1.1034	8.89	32.00	0.278 ✔
T14	20 - 10	L3 1/2x4x1/4	23.71	11.59	131.1	29.000	1.1934	9.08	34.61	0.262 ✔
T15	10 - 0	L4x4x1/4	24.62	12.05	117.0	29.000	1.2909	9.39	37.44	0.251 ✔

Top Girt Design Data (Tension)

Section No.	Elevation ft	Size	L ft	L_u ft	Kl/r	F_a ksi	A in^2	Actual P K	Allow. P_a K	Ratio $\frac{P}{P_a}$
T1	195 - 180	L1 3/4x1 3/4x3/16	5.00	4.51	107.3	29.000	0.3604	0.27	10.45	0.026 ✔
T2	180 - 160	L1 3/4x1 3/4x3/16	5.00	4.51	107.3	29.000	0.3604	0.25	10.45	0.024 ✔

Section Capacity Table

Section No.	Elevation ft	Component Type	Size	Critical Element	P K	$SF*P_{allow}$ K	% Capacity	Pass Fail
T1	195 - 180	Leg	P2x.154 (2.38 OD)	1	-8.92	28.30	31.5	Pass
T2	180 - 160	Leg	P3x.216 (3.5 OD)	25	-37.12	71.56	51.9	Pass
T3	160 - 140	Leg	P3x.300 (3.50 OD)	56	-79.76	96.06	83.0	Pass
T4	140 - 120	Leg	P4x.337 (4.50 OD)	83	-118.08	139.08	84.9	Pass
T5	120 - 113.333	Leg	P5x.375 (5.5625 OD)	104	-130.49	206.27	63.3	Pass
T6	113.333 - 106.667	Leg	P5x.375 (5.5625 OD)	113	-142.12	206.27	68.9	Pass
T7	106.667 - 100	Leg	P5x.375 (5.5625 OD)	122	-153.65	206.27	74.5	Pass
T8	100 - 80	Leg	P6x.28 (6.625 OD)	131	-186.63	196.58	94.9	Pass
T9	80 - 70	Leg	P6x.432 (6.625 OD)	152	-199.62	264.31	75.5	Pass
T10	70 - 60	Leg	P6x.432 (6.625 OD)	161	-215.60	264.31	81.6	Pass
T11	60 - 50	Leg	P8x.322 (8.625 OD)	170	-230.76	287.78	80.2	Pass
T12	50 - 40	Leg	P8x.322 (8.625 OD)	179	-245.71	287.78	85.4	Pass
T13	40 - 20	Leg	P8x.322 (8.625 OD)	188	-274.92	287.78	95.5	Pass

Section No.	Elevation ft	Component Type	Size	Critical Element	P K	SF*P_{allow} K	% Capacity	Pass Fail
T14	20 - 10	Leg	P8x.5 (8.625 OD)	203	-289.97	435.22	66.6	Pass
T15	10 - 0	Leg	P8x.5 (8.625 OD)	212	-303.30	435.22	69.7	Pass
T1	195 - 180	Diagonal	L1 3/4x1 3/4x3/16	11	-1.90	9.08	21.0 28.1 (b)	Pass
T2	180 - 160	Diagonal	L1 3/4x1 3/4x3/16	35	-3.73	6.24	59.9	Pass
T3	160 - 140	Diagonal	L2x2x3/16	62	-6.25	6.47	96.7	Pass
T4	140 - 120	Diagonal	L2 1/2x2 1/2x3/16	90	-6.63	8.16	81.3	Pass
T5	120 - 113.333	Diagonal	L2 1/2x2 1/2x3/16	111	-6.58	7.57	87.0	Pass
T6	113.333 - 106.667	Diagonal	L2 1/2x2 1/2x3/16	120	-6.61	6.92	95.5	Pass
T7	106.667 - 100	Diagonal	L2 1/2x2 1/2x1/4	129	-6.72	8.24	81.5	Pass
T8	100 - 80	Diagonal	L3x3x3/16	136	-7.01	8.82	79.4	Pass
T9	80 - 70	Diagonal	L3x3x1/4	157	-7.99	8.52	93.8	Pass
T10	70 - 60	Diagonal	L3x3x3/8	166	-8.19	11.20	73.1	Pass
T11	60 - 50	Diagonal	L3x3 1/2x1/4	175	-8.19	8.93	91.7	Pass
T12	50 - 40	Diagonal	L3x3x3/8	184	-8.69	9.57	90.8	Pass
T13	40 - 20	Diagonal	L3 1/2x3 1/2x1/4	193	-9.04	9.07	99.7	Pass
T14	20 - 10	Diagonal	L3 1/2x4x1/4	208	-9.01	10.03	89.8	Pass
T15	10 - 0	Diagonal	L4x4x1/4	217	-9.59	11.68	82.1	Pass
T1	195 - 180	Top Girt	L1 3/4x1 3/4x3/16	5	-0.25	4.98	4.9	Pass
T2	180 - 160	Top Girt	L1 3/4x1 3/4x3/16	29	-0.24	4.98	4.9	Pass
							Summary	
						Leg (T13)	95.5	Pass
						Diagonal (T13)	99.7	Pass
						Top Girt (T1)	4.9	Pass
						Bolt Checks	86.1	Pass
						RATING =	**99.7**	**Pass**

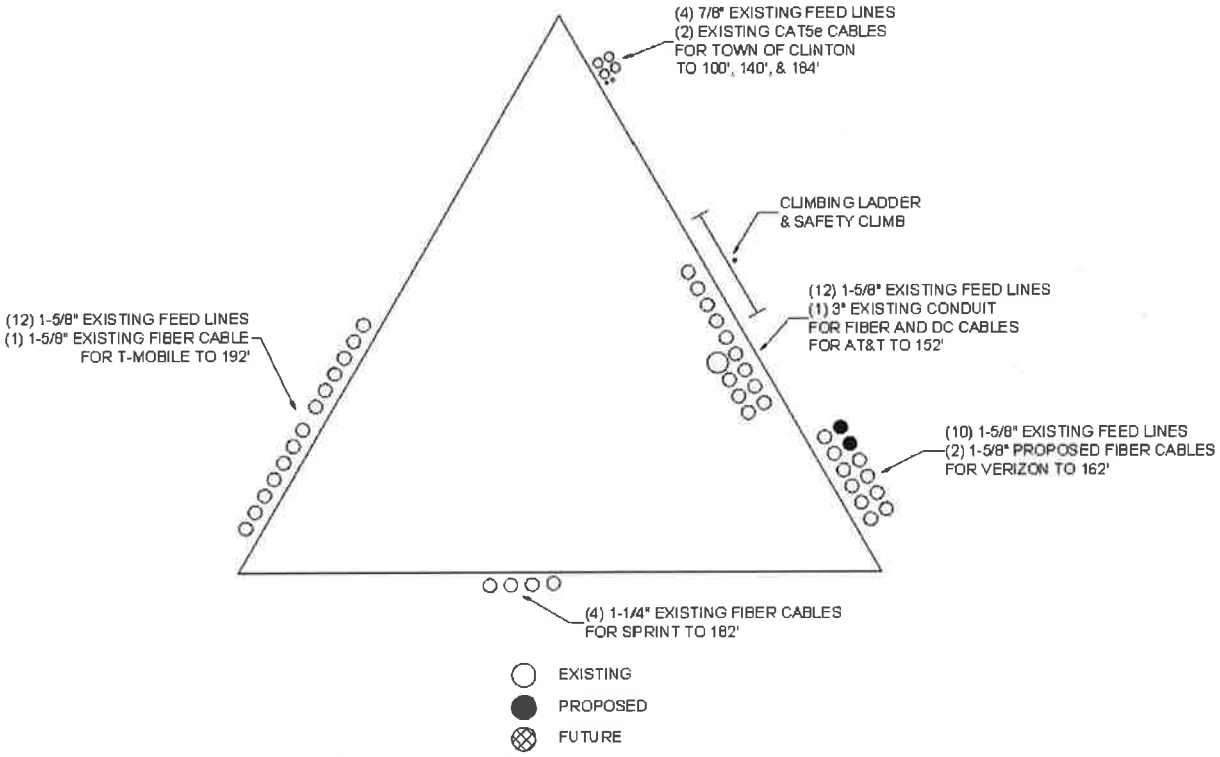

Figure 1 – Feed Line Layout

Moment Capacity of Drilled Concrete Shaft (Caisson) for TIA Rev F or G

Note: Shaft assumed to have ties, not spiral, transverse reinforcing

Site Data

BU#:	
Site Name:	
App #:	

Loads Already Factored		
For M (WL)	1.3	<----Disregard
For P (DL)	1.3	<----Disregard

Pier Properties

Concrete:

Pier Diameter =	6.0	ft
Concrete Area =	4071.5	in^2

Reinforcement:

Clear Cover to **Tie**=	3.00	in
Horiz. **Tie** Bar Size=	4	
Vert. Cage Diameter =	5.33	ft
Vert. Cage Diameter =	64.00	in
Vertical Bar Size =	8	
Bar Diameter =	1.00	in
Bar Area =	0.79	in^2
Number of Bars =	28	
As Total=	22.12	in^2
A s/ Aconc, Rho:	0.0054	0.54%

ACI 10.5 , ACI 21.10.4, and IBC 1810.

Min As for Flexural, Tension Controlled, Shafts:

(3)*(Sqrt(f'c)/Fy:	0.0027
200 / Fy:	0.0033

Minimum Rho Check:

Actual Req'd Min. Rho:	0.33%	Flexural
Provided Rho:	0.54%	**OK**

Ref. Shaft Max Axial Capacities, ϕ Max(Pn or Tn):		
Max Pu = (φ=0.65) Pn.		
Pn per ACI 318 (10-2)	6059.63	kips
at Mu=(ϕ=0.65)Mn=	3162.85	ft-kips
Max Tu, (φ=0.9) Tn =	1194.48	kips
at Mu=ϕ=(0.90)Mn=	0.00	ft-kips

Maximum Shaft Superimposed Forces

TIA Revision:	G	
Max. Factored Shaft Mu:	575.6	ft-kips **(* Note)**
Max. Factored Shaft Pu:	274	kips
Max Axial Force Type:	Tension	

(*) Note: Max Shaft Superimposed Moment does not necessarily equal to the shaft top reaction moment

Load Factor	**Shaft Factored Loads**		
1.00	Mu:	575.6	ft-kips
1.00	Pu:	274	kips

Material Properties

Concrete Comp. strength, f'c =	3000	psi
Reinforcement yield strength, Fy =	60	ksi
Reinforcing Modulus of Elasticity, E =	29000	ksi
Reinforcement yield strain =	0.00207	
Limiting compressive strain =	0.003	

ACI 318 Code

Select Analysis ACI Code=	2005

Seismic Properties

Seismic Design Category =	B
Seismic Risk =	**Low**

Solve (Run) <-- Press Upon Completing All Input

Results:

Governing Orientation Case: **2**

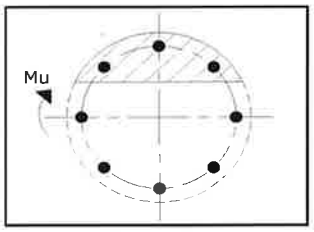

Case 1

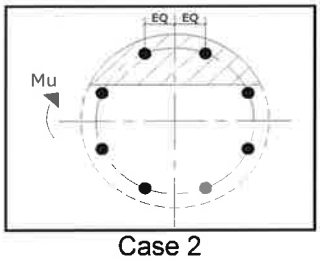

Case 2

Dist. From Edge to Neutral Axis:	**9.03**	in
Extreme Steel Strain, εt:	**0.0195**	
	εt > 0.0050, Tension Controlled	
Reduction Factor,φ:	**0.900**	

Output Note: Negative Pu=Tension

For Axial Compression, φ Pn = Pu:	-274.00	kips
Drilled Shaft Moment Capacity, φMn:	**2352.05**	ft-kips
Drilled Shaft Superimposed Mu:	**575.60**	ft-kips

(Mu/φMn, Drilled Shaft Flexure CSR:	**24.5%**

Self Support Tower Caisson Foundation Analysis

Code (F or G)	F

Reactions	
Uplift (Per Leg) (k)	274
Comp. (Per Leg) (k)	310

Legend	
	Input
	Output
	Input Error
	Notes

Caisson Properties	
Diameter (ft)	6.0
Overall Length (ft)	51.5
Height Above Grade (ft)	0.5
γ Unit Weight of Conc. (kcf)	0.150
Foundation Modified?	No

Soil Properties	
Type of Soil Parameter Input	Caisson Capacities Per FDH Geo
Frost Depth (ft)	3.33
Water Table Level (ft)	5
Number of Soil Layers Below Grade	0
Ult. Tip Bearing Pressure (ksf)	12.55
Net or Gross Bearing?	Net

Normal Soils Inputs
Normal Soils
Determine Per County
100
0
6 ksf (F)/ksf (G)
Net

FDH Geo Inputs
Caisson Capacities Per FDH Geo
Determine Per County
Per FDH Geo
0
Per FDH Geo
Net

FDH Geo Skin Friction Resistance	
Ult. Uplift Resistance (k)	727.00
Ult. Comp. Skin Friction Resistance (k)	969.00
γ Recommended Unit Weight of Soil (kcf)	0.105

Soil Profile

Soil Layers	Clay or Sand (C or S)	Depth to Bottom of Soil Layer (ft)	Soil Unit Weight (pcf)	Friction Angle (Φ)	Cohesion (ksf)	Ult. Comp. Skin Friction (ksf)	Ult. Uplift Skin Friction (ksf)
Grade	---	0	0	0	0.00	0.00	0.00

Input Parameter Checks	
Last Soil Layer Depth @ Caisson Tip	OK
Moist Soil Unit Weights Used	OK
Only Φ/Cu Input or Skin Friction Input	OK

Uplift Resistance		
Weight of Conc. (k)	137.3	
Soil Type in Neglected Layer	S	
Top Soil Neglected (ft)	3.33	
Ult. Skin Friction Resistance (k)	727.0	
Ult. Modification Resistance (k)		
Total Allowable Uplift Resistance (k)	**473.3**	
Capacity (%)	**57.9%**	**Sufficient**

Compression Resistance		
Weight of Conc. (k)	65.5	
Soil Type Neglected at Top (C or S)	S	
Top Soil Neglected (ft)	3.33	
Soil Type Neglected at Bottom (C or S)	Do Not Neglect	
Bottom Soil Neglected (ft)	0	
Ult. Skin Friction Resistance (k)	969.0	
Ult. Tip Bearing Resistance (k)	354.8	
Ult. Modification Resistance (k)		
Total Allow. Compressive Resistance (k)	**661.9**	
Capacity (%)	**56.7%**	**Sufficient**

Notes:

1. The depth of the last soil layer entered must be the depth at which the caisson is bearing.
2. The soil unit weights should be the moist unit weight and is a necessary input to account for net bearing. All bouyant unit weights will be accounted for as necessary.
3. If the water table falls in between soil layers, break the soil layer up into two layers.
4. If the geotechnical report provides a skin friction value for each soil layer, make sure the friction angle and cohesion inputs are zero.

```
*****************************************************************************************
*                                                                                       *
* CAISSON - Pier Foundations Analysis and Design -  Copyright Power Line Systems, Inc. 1993-2010 *
*                                                                                       *
*****************************************************************************************
```

Project Title: Clinton 4 CT, CT1879-S-02
Project Notes: 15BYPZ1400

Calculation Method: Full 8CD

******* I N P U T D A T A

Pier Properties

Diameter (ft)	Distance of Top of Pier above Ground (ft)	Concrete Strength (ksi)	Steel Yield Strength (ksi)
6.00	0.50	3.00	60.00

Soil Properties

Layer	Type	Thickness (ft)	Depth at Top of Layer (ft)	Density (lbs/ft^3)	CU (psf)	KP	PHI (deg)
1	Clay	5.00	0.00	110.0			
2	Clay	5.00	5.00	47.6			
3	Sand	5.00	10.00	42.6		2.770	28.00
4	Sand	5.00	15.00	42.6		2.882	29.00
5	Sand	5.00	20.00	47.6		3.000	30.00
6	Sand	5.00	25.00	52.6		3.255	32.00
7	Sand	5.00	30.00	47.6		3.000	30.00
8	Sand	10.00	35.00	52.6		3.255	32.00
9	Sand	5.00	45.00	72.6		4.599	40.00
10	Sand	2.00	50.00	52.6		3.124	31.00

Design (Factored) Loads at Top of Pier

Moment (ft-k)	Axial Load (kips)	Shear Load (kips)	Additional Safety Factor Against Soil Failure
0.0	0.0	29.00	34.91

******* R E S U L T S

Calculated Pier Properties

Length (ft)	Weight (kips)	Pressure Due To Axial Load (psf)	Pressure Due To Weight (psf)	Total End-Bearing Pressure (psf)
51.500	218.419	0.0	7725.0	7725.0

Ultimate Resisting Forces Along Pier

Type	Distance of Top of Layer to Top of Pier (ft)	Thickness (ft)	Density (lbs/ft^3)	CU (psf)	KP	Force (kips)	Arm (ft)
Clay	0.50	5.00	110.0			0.00	3.00
Clay	5.50	5.00	47.6			0.00	8.00
Sand	10.50	5.00	42.6		2.770	223.00	13.10
Sand	15.50	5.00	42.6		2.882	287.26	18.08
Sand	20.50	5.00	47.6		3.000	359.91	23.07
Sand	25.50	5.00	52.6		3.255	463.89	28.07
Sand	30.50	5.00	47.6		3.000	495.18	33.05
Sand	35.50	6.97	52.6		3.255	872.05	39.08
Sand	42.47	3.03	52.6		3.255	-426.30	44.00
Sand	45.50	5.00	72.6		4.599	-1101.21	48.06
Sand	50.50	1.00	52.6		3.124	-161.29	51.00

Shear and Moments Along Pier

Distance below Top of Pier (ft)	Shear (with Safety Factor) (kips)	Moment (with Safety Factor) (ft-k)	Shear (without Safety Factor) (kips)	Moment (without Safety Factor) (ft-k)
0.00	1012.5	13.0	29.0	0.4

5.15	1012.5	5227.4	29.0	149.7
10.30	1012.5	10441.7	29.0	299.1
15.45	792.0	15131.8	22.7	433.5
20.60	495.7	18473.6	14.2	529.2
25.75	121.0	20094.8	3.5	575.6
30.90	-358.8	19509.8	-10.3	558.9
36.05	-880.1	16360.3	-25.2	468.6
41.20	-1519.0	10217.5	-43.5	292.7
46.35	-1085.9	2704.6	-31.1	77.5
51.50	-0.0	0.0	-0.0	0.0

Velocitel, Inc., d.b.a. FDH Velocitel, 6521 Meridien Drive Raleigh, NC 27616, Ph. 919.755.1012

Structural Modification Analysis for SBA Network Services, Inc.

195' Self-Support Tower

SBA Site Name: Clinton 4 CT
SBA Site ID: CT01879-S-02
Verizon Site Name: Clinton South
Site Address: 46 Meadow Road Clinton, CT 06413

FDH Project Number 15BZTJ1400 (R1)

Analysis Results

Tower Components	99.7%	Sufficient
Foundation	57.9%	Sufficient

Prepared By:

Brian Apple, EI
Project Engineer I

Reviewed By:

Dennis D. Abel, PE
Director of Structural Engineering
CT License No. 23247

Velocitel, Inc., d.b.a. FDH Velocitel
6521 Meridien Drive
Raleigh, NC, 27616
(919) 755-1012

STATE OF CONNECTICUT
DENNIS D. ABEL
No. 23247
LICENSED
PROFESSIONAL ENGINEER

11-20-2015

November 20, 2015

Prepared pursuant to the TIA/EIA-222-F Structural Standards for Steel Antenna Towers and Antenna Supporting Structures and 2005 Connecticut Building Code

TABLE OF CONTENTS

EXECUTIVE SUMMARY 3
Conclusions 3
Recommendations 3
APPURTENANCE LISTING 4
RESULTS 5
GENERAL COMMENTS 6
LIMITATIONS 6
APPENDIX 7

EXECUTIVE SUMMARY

At the request of SBA Network Services, Inc., FDH Velocitel performed a structural analysis of the existing self-supported tower located in Clinton, CT to determine whether the tower is structurally adequate to support the antenna configuration in place per **Table 1** pursuant to the *Structural Standards for Steel Antenna Towers and Antenna Supporting Structures, TIA/EIA-222-F* and the *2005 Connecticut State Building Code (CSBC)*. Information pertaining to the antenna loading, current tower geometry, member sizes, and below grade parameters was obtained from:

Source	Document Type	Reference	Date
Sabre Communications Corp.	Tower & Foundation Drawings	Job No. 00-10101	November 19, 1999
Jaworski Geotech, Inc.	Geotechnical Report	Job No. 99500G	December 13, 1999
FDH Engineering, Inc.	Modification Drawings	Project No. 1465YH1400	June 3, 2014
FDH Engineering, Inc.	Modification Inspection	Project No. 1466SS1400	February 13, 2015
FDH Engineering, Inc.	TIA Inspection	Project No. 1466SS1400	February 13, 2015
FDH Velocitel	Modification Drawings	Project No. 15BZTJ1400	September 24, 2015
SBA Network Services, Inc.	-	-	-

The *basic design wind speed* per the *TIA/EIA-222-F* standards and the *2005 CSBC* is 85 mph without ice and 38 mph with 3/4" radial ice. Ice is considered to increase in thickness with height.

Conclusions

With the antenna configuration in place per **Table 1** we have determined the tower stress level to be sufficient and the foundation(s) to be sufficient pursuant to the requirements stipulated by *Structural Standards for Steel Antenna Towers and Antenna Supporting Structures, TIA/EIA-222-F* and the *2005 CSBC* provided the **Recommendations** listed below are satisfied. For a more detailed description of the analysis of the tower, see the **Results** section of this report.

Our structural analysis has been performed assuming all information provided to FDH Velocitel is accurate (i.e., the structure member information, tower layout, existing antenna loading, and proposed antenna loading) and that the tower has been properly erected and maintained per the original design drawings.

Recommendations

To ensure the requirements of the current analysis standards are met with the antenna configuration in place per **Table 1**, we have the following recommendations:

1. Feed lines must be installed as shown in **Figure 1**.
2. RRH/RRU Stipulation: The proposed equipment may be installed in any arrangement as determined by the client.
3. The modifications listed in FDH Velocitel (Project No. 15BZTJ1400) Modification Drawings for a 195' Self-Support Tower dated September 24, 2015 must be installed as specified.

APPURTENANCE LISTING

The antennas and equipment, with their corresponding feed lines, considered for this analysis are shown in **Table 1**. *If the actual layout determined in the field deviates from the layout, FDH Velocitel should be contacted to perform a revised analysis.*

Table 1 - Appurtenance Loading

Existing Loading:

Antenna Elevation (ft)	Description	Feed Lines	Carrier	Mount Elevation (ft)	Mount Type
194	(3) Ericsson AIR B2A/B4P (3) Ericsson AIR B4A/B2P	(12) 1-5/8" (1) 1-5/8" Fiber	T-Mobile	192	(3) 13' T-Frames
193.5	(3) Ericsson KRY 112 144/1				
185	(1) Celwave PD1151	(1) 7/8"	Town of Clinton	178	Direct Mount
180	(3) RFS APXVTM14-C-I20 (3) Alcatel Lucent TD-RRH8x20-25 (3) RFS APXVSPP18-C-A20	(3) 1-1/4" Fiber	Sprint	178.5	(3) Pipe Mounts
177	(3) ALU 1900 MHZ RRUs			175	(3) 12' T-Frames
173.5	(3) ALU 800 MHZ RRUs (3) ALU 800 MHZ Filters (4) RFS ACU-A20-N				
162	(3) Antel BXA-70063/6CF (4) Antel LPA-80063/4CF (2) Antel BXA-171063/8BF (1) Antel BXA-171063/12CF (2) Antel LPA-80063/6CF (6) RFS FD9R6004/2C-3L	(12) 1-5/8"	Verizon	161	(3) 12' T-Frames
151.5	(1) Raycap DC6-48-60-18-8F	(12) 1-5/8" (1) 3" Rigid Conduit	AT&T	150.5	(3) 12' T-Frames
150.5	(9) KMW AM-X-CD-14-65-00T (3) Powerwave 7770 (6) Powerwave TT19-08BP111-001 (3) Powerwave LGP13519 (3) CSS DBC-750 (6) Ericsson RRUS-11			150	
141.5	(3) Sinclair SD312HL	(3) 7/8"	Town of Clinton	138	(3) 4' Standoffs
102	(1) Radiowaves RDH4518A	(2) CAT 5e		101	(1) Pipe Mount

Proposed Carrier Final Loading:

Antenna Elevation (ft.)	Description	Feed Lines	Carrier	Mount Elevation (ft.)	Mount Type
162.5	(2) Antel LPA-80063/6CF	(10) 1-5/8" (2) 1-5/8" Fiber	Verizon	161	(3) 12' T-Frames
162	(4) Antel LPA-80063/4CF (6) Commscope SBNHH-1D65B (3) Alcatel Lucent RRH2X60-AWS (3) Alcatel Lucent RRH2X60-PCS (3) Alcatel Lucent RRH2x60-700 (6) RFS FD9R6004/2C-3L (2) RFS DB-T1-6Z-8AB-0Z				

RESULTS

The following material grades for individual members were used for analysis:

Table 2 - Material Grade

Member Type	Material Grade
Legs	50 ksi
Bracing	36 ksi

Table 3 and **Table 4** display the summary of capacities for the analyzed structure and its additional components. Values greater than 100% indicate locations where the maximum force in the member exceeds its capacity. *Note: Capacities up to 105% are considered acceptable (except foundation soil interaction, up to 110% is considered acceptable).*

If the assumptions outlined in this report differ from actual field conditions, FDH Velocitel should be contacted to perform a revised analysis. Furthermore, as no information pertaining to the allowable twist and sway requirements for the appurtenances was provided, deflection and rotation were not taken into consideration when performing this analysis.

See the **Appendix** for detailed modeling information.

Table 3 - Structure Member Capacities

Section No.	Elevation (ft.)	Component Type	Size	% Capacity	Pass / Fail
T1	195 - 180	Leg	P2x.154 (2.38 OD)	31.5	Pass
T2	180 - 160	Leg	P3x.216 (3.5 OD)	51.9	Pass
T3	160 - 140	Leg	P3x.300 (3.50 OD)	83.0	Pass
T4	140 - 120	Leg	P4x.337 (4.50 OD)	84.9	Pass
T5	120 - 113.333	Leg	P5x.375 (5.5625 OD)	63.3	Pass
T6	113.333 - 106.667	Leg	P5x.375 (5.5625 OD)	68.9	Pass
T7	106.667 - 100	Leg	P5x.375 (5.5625 OD)	74.5	Pass
T8	100 - 80	Leg	P6x.28 (6.625 OD)	94.9	Pass
T9	80 - 70	Leg	P6x.432 (6.625 OD)	75.5	Pass
T10	70 - 60	Leg	P6x.432 (6.625 OD)	81.6	Pass
T11	60 - 50	Leg	P8x.322 (8.625 OD)	80.2	Pass
T12	50 - 40	Leg	P8x.322 (8.625 OD)	85.4	Pass
T13	40 - 20	Leg	P8x.322 (8.625 OD)	95.5	Pass
T14	20 - 10	Leg	P8x.5 (8.625 OD)	66.6	Pass
T15	10 - 0	Leg	P8x.5 (8.625 OD)	69.7	Pass
T1	195 - 180	Diagonal	L1 3/4x1 3/4x3/16	21.0 28.1 (b)	Pass
T2	180 - 160	Diagonal	L1 3/4x1 3/4x3/16	59.9	Pass
T3	160 - 140	Diagonal	L2x2x3/16	96.7	Pass
T4	140 - 120	Diagonal	L2 1/2x2 1/2x3/16	81.3	Pass
T5	120 - 113.333	Diagonal	L2 1/2x2 1/2x3/16	87.0	Pass
T6	113.333 - 106.667	Diagonal	L2 1/2x2 1/2x3/16	95.5	Pass
T7	106.667 - 100	Diagonal	L2 1/2x2 1/2x1/4	81.5	Pass
T8	100 - 80	Diagonal	L3x3x3/16	79.4	Pass
T9	80 - 70	Diagonal	L3x3x1/4	93.8	Pass
T10	70 - 60	Diagonal	L3x3x3/8	73.1	Pass
T11	60 - 50	Diagonal	L3x3 1/2x1/4	91.7	Pass
T12	50 - 40	Diagonal	L3x3x3/8	90.8	Pass
T13	40 - 20	Diagonal	L3 1/2x3 1/2x1/4	99.7	Pass
T14	20 - 10	Diagonal	L3 1/2x4x1/4	89.8	Pass
T15	10 - 0	Diagonal	L4x4x1/4	82.1	Pass
T1	195 - 180	Top Girt	L1 3/4x1 3/4x3/16	4.9	Pass
T2	180 - 160	Top Girt	L1 3/4x1 3/4x3/16	4.9	Pass

1. Capacities include 1/3 allowable stress increase for wind, per TIA/EIA-222-F standards.

Table 4 – Additional Structure Component Capacities

Elevation (ft.)	Component	% Capacity	Pass / Fail	Notes
0	Anchor Rods	62.6	Pass	-
0	Base Foundation (Soil Interaction)	57.9	Pass	-
0	Base Foundation (Structural)	24.5	Pass	-

1. Capacities include 1/3 allowable stress increase for wind, per TIA/EIA-222-F standards.

FDH Velocitel has considered the acceptability of the tower stress level with the existing and proposed loading prior to the installation of the proposed tower modifications referenced in this report. This opinion is consistent with section 4.5 of TIA-1019-A-2012, *Structural Standards for Installation, Alteration and Maintenance of Antenna Supporting Structures and Antennas*, using a non-operational, fastest-mile, basic design wind speed of 68 mph. This reduced loading is based upon the reduced statistical risk of a wind speed of that magnitude occurring for durations of up to 6 months.

GENERAL COMMENTS

This engineering analysis is based upon the theoretical capacity of the structure. It is not a condition assessment of the tower and its foundation. It is the responsibility of SBA Network Services, Inc. to verify that the tower modeled and analyzed is the correct structure (with accurate antenna loading information) modeled. If there are substantial modifications to be made or the assumptions made in this analysis are not accurate, FDH Velocitel should be notified immediately to perform a revised analysis.

LIMITATIONS

All opinions and conclusions are considered accurate to a reasonable degree of engineering certainty based upon the evidence available at the time of this report. All opinions and conclusions are subject to revision based upon receipt of new or additional/updated information. All services are provided exercising a level of care and diligence equivalent to the standard and care of our profession. No other warranty or guarantee, expressed or implied, is offered. Our services are confidential in nature and we will not release this report to any other party without the client's consent. The use of this engineering work is limited to the express purpose for which it was commissioned and it may not be reused, copied, or distributed for any other purpose without the written consent of FDH Velocitel.

APPENDIX

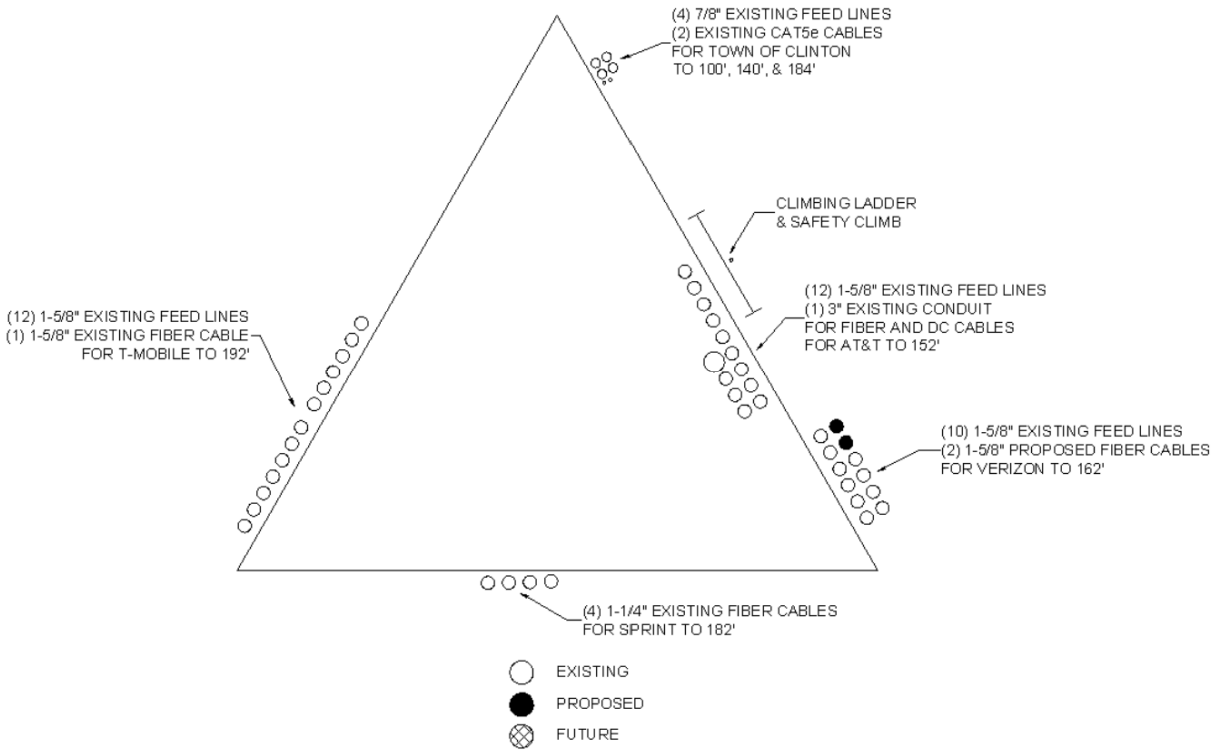

Figure 1 – Feed Line Layout

Section	T1	T2	T3	T4	T5	T6	T7	T8	T9	T10	T11	T12	T13	T14	T15
Legs	P2x.154 (2.38 OD)	P3x.216 (3.5 OD)	P3x.300 (3.50 OD)	P4x.337 (4.50 OD)	P5x.375 (5.5625 OD)			P6x.28 (6.625 OD)	P6x.432 (6.625 OD)		P8x.322 (8.625 OD)			P8x.5 (8.625 OD)	
Leg Grade	A572-50														
Diagonals	L1 3/4x1 3/4x3/16		L2x2x3/16	L2 1/2x2 1/2x3/16			A	L3x3x3/16	L3x3x1/4	L3x3x3/8	L3x3 1/2x1/4	L3x3x3/8	L3 1/2x3 1/2x1/4	L3 1/2x4x1/4	L4x4x1/4
Diagonal Grade	A36														
Top Girts	L1 3/4x1 3/4x3/16		N.A.												
Face Width (ft) 23	5		7	9	11	11.6667	12.3333	13	15	16	17	18	19	21	22
# Panels @ (ft)	11 @ 5			9 @ 6.66667					8 @ 10						
Weight (K) 22.4	0.5	0.9	1.2	1.6	0.7	0.7	0.8	2.2	1.4	1.7	1.5	1.8	3.3	2.2	2.3

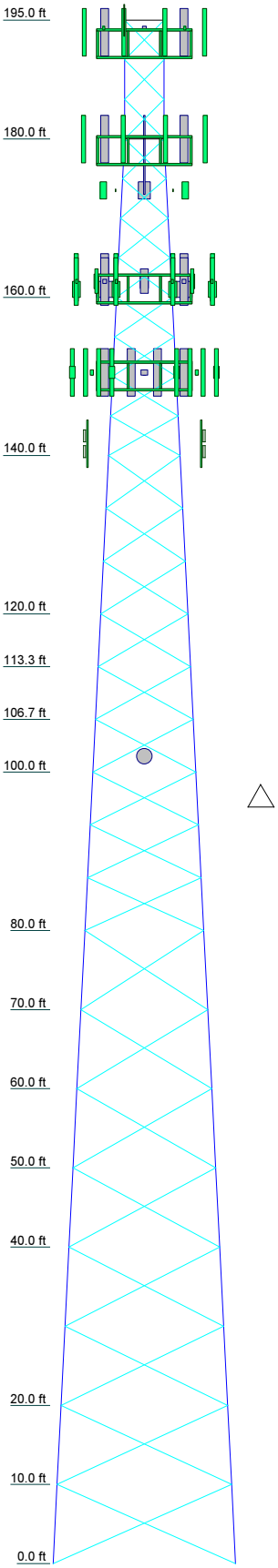

DESIGNED APPURTENANCE LOADING

TYPE	ELEVATION	TYPE	ELEVATION
Lightning Rod	195	(3) T-Frames	161
AIR 21 B2A/B4P w/ Mount Pipe	192	(2) SBNHH-1D65B w/ Mount Pipe	161
AIR 21 B2A/B4P w/ Mount Pipe	192	(2) SBNHH-1D65B w/ Mount Pipe	161
AIR 21 B2A/B4P w/ Mount Pipe	192	(2) SBNHH-1D65B w/ Mount Pipe	161
AIR 21 B4A/B2P w/ Mount Pipe	192	RRH2X60-AWS	161
AIR 21 B4A/B2P w/ Mount Pipe	192	RRH2X60-AWS	161
AIR 21 B4A/B2P w/ Mount Pipe	192	RRH2X60-AWS	161
KRY 112 144/1	192	RRH2X60-PCS	161
KRY 112 144/1	192	RRH2X60-PCS	161
KRY 112 144/1	192	RRH2X60-PCS	161
(3) T-Frames	192	RRH2x60-700	161
APXVTM14-C-I20 w/Mount Pipe	178.5	RRH2x60-700	161
APXVTM14-C-I20 w/Mount Pipe	178.5	RRH2x60-700	161
APXVTM14-C-I20 w/Mount Pipe	178.5	(2) FD9R6004/2CL-3CL Diplexer	161
TD-RRH8x20-25	178.5	(2) FD9R6004/2CL-3CL Diplexer	161
TD-RRH8x20-25	178.5	(2) FD9R6004/2CL-3CL Diplexer	161
TD-RRH8x20-25	178.5	DC6-48-60-18-8F	150.5
APXVSPP18-C-A20 w/Mount Pipe	178.5	(3) AM-X-CD-14-65-00T w/ Mount Pipe	150
APXVSPP18-C-A20 w/Mount Pipe	178.5	(3) AM-X-CD-14-65-00T w/ Mount Pipe	150
APXVSPP18-C-A20 w/Mount Pipe	178.5	(3) AM-X-CD-14-65-00T w/ Mount Pipe	150
(3) T-Frames	178.5	7770 w/Mount Pipe	150
PD1151	178	7770 w/Mount Pipe	150
1900 MHz RRU	175	7770 w/Mount Pipe	150
1900 MHz RRU	175	(2) TT19-08BP111-001 TMA	150
800 MHz RRU	175	(2) TT19-08BP111-001 TMA	150
800 MHz RRU	175	(2) TT19-08BP111-001 TMA	150
800 MHz RRU	175	LGP13519 Diplexer	150
800 MHz Filter	175	LGP13519 Diplexer	150
800 MHz Filter	175	LGP13519 Diplexer	150
800 MHz Filter	175	DBC-750	150
(2) ACU-A20-N RET	175	DBC-750	150
ACU-A20-N RET	175	DBC-750	150
ACU-A20-N RET	175	(2) RRUS-11	150
1900 MHz RRU	175	(2) RRUS-11	150
Pipe Mount [PM 601-3]	175	(2) RRUS-11	150
(2) LPA-80063/4CF w/ Mount Pipe	161	(3) T-Frames	150
LPA-80063/4CF w/ Mount Pipe	161	Sinclair SD312HL	138
LPA-80063/4CF w/ Mount Pipe	161	Sinclair SD312HL	138
LPA-80063/6CF w/ Mount Pipe	161	Sinclair SD312HL	138
LPA-80063/6CF w/ Mount Pipe	161	(3) Standoffs	138
(2) DB-T1-6Z-8AB-0Z	161	Pipe Mount	101
(2) DB-T1-6Z-8AB-0Z	161	RDH4518A	101
(2) DB-T1-6Z-8AB-0Z	161		

SYMBOL LIST

MARK	SIZE	MARK	SIZE
A	L2 1/2x2 1/2x1/4		

MATERIAL STRENGTH

GRADE	Fy	Fu	GRADE	Fy	Fu
A572-50	50 ksi	65 ksi	A36	36 ksi	58 ksi

TOWER DESIGN NOTES

1. Tower is located in Middlesex County, Connecticut.
2. Tower designed for a 85 mph basic wind in accordance with the TIA/EIA-222-F Standard.
3. Tower is also designed for a 38 mph basic wind with 0.75 in ice. Ice is considered to increase in thickness with height.
4. Deflections are based upon a 50 mph wind.

FDH VELOCITEL
ENGINEERING INNOVATION
Tower Analysis

Velocitel, Inc., d.b.a. FDH Velocitel
6521 Meridien Drive, Suite 107
Raleigh, North Carolina 27616
Phone: 9197551012
FAX: 9197551031

Job: *Clinton 4 CT, CT01879-S-02*			
Project: *15BZTJ1400 (R1)*			
Client: SBA Network Services, Inc.	Drawn by: BApple	App'd:	
Code: TIA/EIA-222-F	Date: 11/20/15	Scale: NTS	
Path:		Dwg No. E-1	

Section	T1	T2	T3	T4	T5	T6	T7	T8	T9	T10	T11	T12	T13	T14	T15
Legs	P2x.154 (2.38 OD)	P3x.216 (3.5 OD)	P3x.300 (3.50 OD)	P4x.337 (4.50 OD)	P5x.375 (5.5625 OD)			P6x.28 (6.625 OD)	P6x.432 (6.625 OD)		P8x.322 (8.625 OD)			P8x.5 (8.625 OD)	
Leg Grade	A572-50														
Diagonals	L1 3/4x1 3/4x3/16		L2x2x3/16	L2 1/2x2 1/2x3/16			A	L3x3x3/16	L3x3x1/4	L3x3x3/8	L3x3 1/2x1/4	L3x3x3/8	L3 1/2x3 1/2x1/4	L3 1/2x4x1/4	L4x4x1/4
Diagonal Grade	A36														
Top Girts	L1 3/4x1 3/4x3/16		N.A.												
Face Width (ft)	5		7	9	11	11.6667	12.3333	13	15	16	17	18	19	21	22	23
# Panels @ (ft)	11 @ 5			9 @ 6.66667					8 @ 10						
Weight (K)	0.5	0.9	1.2	1.6	0.7	0.7	0.8	2.2	1.4	1.7	1.5	1.8	3.3	2.2	2.3	22.4

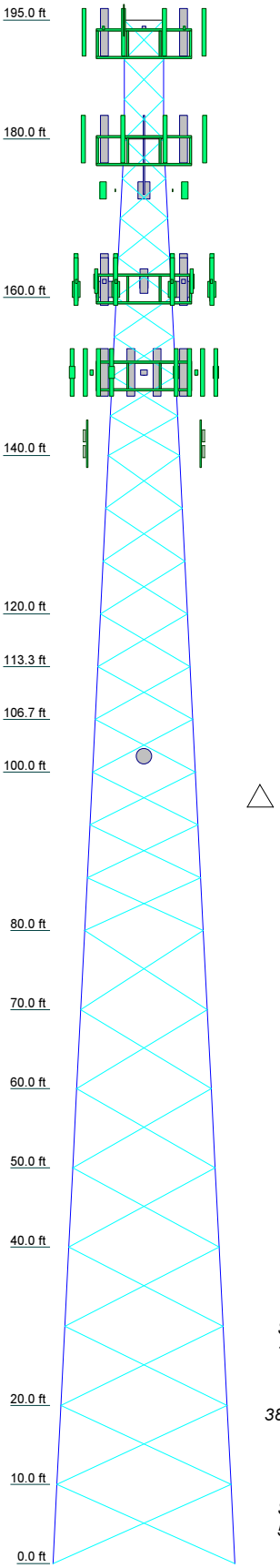

SYMBOL LIST

MARK	SIZE	MARK	SIZE
A	L2 1/2x2 1/2x1/4		

MATERIAL STRENGTH

GRADE	Fy	Fu	GRADE	Fy	Fu
A572-50	50 ksi	65 ksi	A36	36 ksi	58 ksi

TOWER DESIGN NOTES

1. Tower is located in Middlesex County, Connecticut.
2. Tower designed for a 85 mph basic wind in accordance with the TIA/EIA-222-F Standard.
3. Tower is also designed for a 38 mph basic wind with 0.75 in ice. Ice is considered to increase in thickness with height.
4. Deflections are based upon a 50 mph wind.
5. TOWER RATING: 99.7%

MAX. CORNER REACTIONS AT BASE:
DOWN: 310 K
SHEAR: 32 K

UPLIFT: -274 K
SHEAR: 29 K

AXIAL
86 K

SHEAR
15 K

MOMENT
1740 kip-ft

TORQUE 2 kip-ft
38 mph WIND - 0.7500 in ICE

AXIAL
42 K

SHEAR
51 K

MOMENT
5899 kip-ft

TORQUE 6 kip-ft
REACTIONS - 85 mph WIND

FDH VELOCITEL
ENGINEERING INNOVATION
Tower Analysis

Velocitel, Inc., d.b.a. FDH Velocitel
6521 Meridien Drive, Suite 107
Raleigh, North Carolina 27616
Phone: 9197551012
FAX: 9197551031

Job: *Clinton 4 CT, CT01879-S-02*			
Project: *15BZTJ1400 (R1)*			
Client: SBA Network Services, Inc.	Drawn by: BApple	App'd:	
Code: TIA/EIA-222-F	Date: 11/20/15	Scale: NTS	
Path:		Dwg No. E-1	

Tower Input Data

The main tower is a 3x free standing tower with an overall height of 195.00 ft above the ground line.
The base of the tower is set at an elevation of 0.00 ft above the ground line.
The face width of the tower is 5.00 ft at the top and 23.00 ft at the base.
This tower is designed using the TIA/EIA-222-F standard.
The following design criteria apply:

Tower is located in Middlesex County, Connecticut.
Basic wind speed of 85 mph.
Nominal ice thickness of 0.7500 in.
Ice thickness is considered to increase with height.
Ice density of 56 pcf.
A wind speed of 38 mph is used in combination with ice.
Temperature drop of 50 °F.
Deflections calculated using a wind speed of 50 mph.
Pressures are calculated at each section.
Stress ratio used in tower member design is 1.333.
Local bending stresses due to climbing loads, feed line supports, and appurtenance mounts are not considered.

Options

Consider Moments - Legs
Consider Moments - Horizontals
Consider Moments - Diagonals
Use Moment Magnification
√ Use Code Stress Ratios
√ Use Code Safety Factors - Guys
√ Escalate Ice
Always Use Max Kz
Use Special Wind Profile
√ Include Bolts In Member Capacity
Leg Bolts Are At Top Of Section
√ Secondary Horizontal Braces Leg
Use Diamond Inner Bracing (4 Sided)
Add IBC .6D+W Combination

Distribute Leg Loads As Uniform
Assume Legs Pinned
√ Assume Rigid Index Plate
√ Use Clear Spans For Wind Area
√ Use Clear Spans For KL/r
Retension Guys To Initial Tension
√ Bypass Mast Stability Checks
√ Use Azimuth Dish Coefficients
√ Project Wind Area of Appurt.
Autocalc Torque Arm Areas
SR Members Have Cut Ends
√ Sort Capacity Reports By Component
Triangulate Diamond Inner Bracing
Use TIA-222-G Tension Splice Capacity Exemption

Treat Feedline Bundles As Cylinder
Use ASCE 10 X-Brace Ly Rules
√ Calculate Redundant Bracing Forces
Ignore Redundant Members in FEA
√ SR Leg Bolts Resist Compression
√ All Leg Panels Have Same Allowable
Offset Girt At Foundation
√ Consider Feedline Torque
√ Include Angle Block Shear Check

Poles

Include Shear-Torsion Interaction
Always Use Sub-Critical Flow
Use Top Mounted Sockets

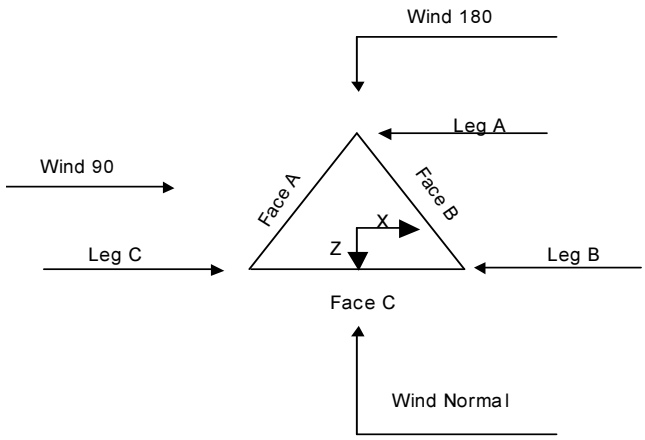

Triangular Tower

Tower Section Geometry

Tower Section	Tower Elevation ft	Assembly Database	Description	Section Width ft	Number of Sections	Section Length ft
T1	195.00-180.00			5.00	1	15.00
T2	180.00-160.00			5.00	1	20.00
T3	160.00-140.00			7.00	1	20.00
T4	140.00-120.00			9.00	1	20.00
T5	120.00-113.33			11.00	1	6.67
T6	113.33-106.67			11.67	1	6.67
T7	106.67-100.00			12.33	1	6.67
T8	100.00-80.00			13.00	1	20.00
T9	80.00-70.00			15.00	1	10.00
T10	70.00-60.00			16.00	1	10.00
T11	60.00-50.00			17.00	1	10.00
T12	50.00-40.00			18.00	1	10.00
T13	40.00-20.00			19.00	1	20.00
T14	20.00-10.00			21.00	1	10.00
T15	10.00-0.00			22.00	1	10.00

Tower Section Geometry *(cont'd)*

Tower Section	Tower Elevation ft	Diagonal Spacing ft	Bracing Type	Has K Brace End Panels	Has Horizontals	Top Girt Offset in	Bottom Girt Offset in

Tower Section	Tower Elevation ft	Diagonal Spacing ft	Bracing Type	Has K Brace End Panels	Has Horizontals	Top Girt Offset in	Bottom Girt Offset in
T1	195.00-180.00	5.00	X Brace	No	No	0.0000	0.0000
T2	180.00-160.00	5.00	X Brace	No	No	0.0000	0.0000
T3	160.00-140.00	5.00	X Brace	No	No	0.0000	0.0000
T4	140.00-120.00	6.67	X Brace	No	No	0.0000	0.0000
T5	120.00-113.33	6.67	X Brace	No	No	0.0000	0.0000
T6	113.33-106.67	6.67	X Brace	No	No	0.0000	0.0000
T7	106.67-100.00	6.67	X Brace	No	No	0.0000	0.0000
T8	100.00-80.00	6.67	X Brace	No	No	0.0000	0.0000
T9	80.00-70.00	10.00	X Brace	No	No	0.0000	0.0000
T10	70.00-60.00	10.00	X Brace	No	No	0.0000	0.0000
T11	60.00-50.00	10.00	X Brace	No	No	0.0000	0.0000
T12	50.00-40.00	10.00	X Brace	No	No	0.0000	0.0000
T13	40.00-20.00	10.00	X Brace	No	No	0.0000	0.0000
T14	20.00-10.00	10.00	X Brace	No	No	0.0000	0.0000
T15	10.00-0.00	10.00	X Brace	No	No	0.0000	0.0000

Tower Section Geometry *(cont'd)*

Tower Elevation ft	Leg Type	Leg Size	Leg Grade	Diagonal Type	Diagonal Size	Diagonal Grade
T1 195.00-180.00	Pipe	P2x.154 (2.38 OD)	A572-50 (50 ksi)	Equal Angle	L1 3/4x1 3/4x3/16	A36 (36 ksi)
T2 180.00-160.00	Pipe	P3x.216 (3.5 OD)	A572-50 (50 ksi)	Equal Angle	L1 3/4x1 3/4x3/16	A36 (36 ksi)
T3 160.00-140.00	Pipe	P3x.300 (3.50 OD)	A572-50 (50 ksi)	Equal Angle	L2x2x3/16	A36 (36 ksi)
T4 140.00-120.00	Pipe	P4x.337 (4.50 OD)	A572-50 (50 ksi)	Equal Angle	L2 1/2x2 1/2x3/16	A36 (36 ksi)
T5 120.00-113.33	Pipe	P5x.375 (5.5625 OD)	A572-50 (50 ksi)	Equal Angle	L2 1/2x2 1/2x3/16	A36 (36 ksi)
T6 113.33-106.67	Pipe	P5x.375 (5.5625 OD)	A572-50 (50 ksi)	Equal Angle	L2 1/2x2 1/2x3/16	A36 (36 ksi)
T7 106.67-100.00	Pipe	P5x.375 (5.5625 OD)	A572-50 (50 ksi)	Equal Angle	L2 1/2x2 1/2x1/4	A36 (36 ksi)
T8 100.00-80.00	Pipe	P6x.28 (6.625 OD)	A572-50 (50 ksi)	Equal Angle	L3x3x3/16	A36 (36 ksi)
T9 80.00-70.00	Pipe	P6x.432 (6.625 OD)	A572-50 (50 ksi)	Equal Angle	L3x3x1/4	A36 (36 ksi)
T10 70.00-60.00	Pipe	P6x.432 (6.625 OD)	A572-50 (50 ksi)	Equal Angle	L3x3x3/8	A36 (36 ksi)
T11 60.00-50.00	Pipe	P8x.322 (8.625 OD)	A572-50 (50 ksi)	Single Angle	L3x3 1/2x1/4	A36 (36 ksi)
T12 50.00-40.00	Pipe	P8x.322 (8.625 OD)	A572-50 (50 ksi)	Single Angle	L3x3x3/8	A36 (36 ksi)
T13 40.00-20.00	Pipe	P8x.322 (8.625 OD)	A572-50 (50 ksi)	Equal Angle	L3 1/2x3 1/2x1/4	A36 (36 ksi)
T14 20.00-10.00	Pipe	P8x.5 (8.625 OD)	A572-50 (50 ksi)	Single Angle	L3 1/2x4x1/4	A36 (36 ksi)
T15 10.00-0.00	Pipe	P8x.5 (8.625 OD)	A572-50 (50 ksi)	Single Angle	L4x4x1/4	A36 (36 ksi)

Tower Section Geometry *(cont'd)*

Tower Elevation ft	Top Girt Type	Top Girt Size	Top Girt Grade	Bottom Girt Type	Bottom Girt Size	Bottom Girt Grade
T1 195.00-180.00	Equal Angle	L1 3/4x1 3/4x3/16	A36 (36 ksi)	Solid Round		A36 (36 ksi)
T2 180.00-160.00	Equal Angle	L1 3/4x1 3/4x3/16	A36 (36 ksi)	Solid Round		A36 (36 ksi)

Tower Section Geometry *(cont'd)*

Tower Elevation ft	Gusset Area (per face) ft^2	Gusset Thickness in	Gusset Grade	Adjust. Factor A_f	Adjust. Factor A_r	Weight Mult.	Double Angle Stitch Bolt Spacing Diagonals in	Double Angle Stitch Bolt Spacing Horizontals in
T1 195.00-180.00	0.00	0.0000	A36 (36 ksi)	1	1	1	36.0000	36.0000
T2 180.00-160.00	0.00	0.0000	A36 (36 ksi)	1	1	1	36.0000	36.0000
T3 160.00-140.00	0.00	0.0000	A36 (36 ksi)	1	1	1	36.0000	36.0000
T4 140.00-120.00	0.00	0.0000	A36 (36 ksi)	1	1	1	36.0000	36.0000
T5 120.00-113.33	0.00	0.0000	A36 (36 ksi)	1	1	1	36.0000	36.0000
T6 113.33-106.67	0.00	0.0000	A36 (36 ksi)	1	1	1	36.0000	36.0000
T7 106.67-100.00	0.00	0.0000	A36 (36 ksi)	1	1	1	36.0000	36.0000
T8 100.00-80.00	0.00	0.0000	A36 (36 ksi)	1	1	1	36.0000	36.0000
T9 80.00-70.00	0.00	0.0000	A36 (36 ksi)	1	1	1	36.0000	36.0000
T10 70.00-60.00	0.00	0.0000	A36 (36 ksi)	1	1	1	36.0000	36.0000
T11 60.00-50.00	0.00	0.0000	A36 (36 ksi)	1	1	1	36.0000	36.0000
T12 50.00-40.00	0.00	0.0000	A36 (36 ksi)	1	1	1	36.0000	36.0000
T13 40.00-20.00	0.00	0.0000	A36 (36 ksi)	1	1	1	36.0000	36.0000
T14 20.00-10.00	0.00	0.0000	A36 (36 ksi)	1	1	1	36.0000	36.0000
T15 10.00-0.00	0.00	0.0000	A36 (36 ksi)	1	1	1	36.0000	36.0000

Tower Section Geometry *(cont'd)*

K Factors[1]

Tower Elevation ft	Calc K Single Angles	Calc K Solid Rounds	Legs	X Brace Diags X Y	K Brace Diags X Y	Single Diags X Y	Girts X Y	Horiz. X Y	Sec. Horiz. X Y	Inner Brace X Y
T1	Yes	No	1	1	1	1	1	1	1	1
195.00-180.00				1	1	1	1	1	1	1
T2	Yes	No	1	1	1	1	1	1	1	1
180.00-160.00				1	1	1	1	1	1	1
T3	Yes	No	1	1	1	1	1	1	1	1
160.00-140.00				1	1	1	1	1	1	1
T4	Yes	No	1	1	1	1	1	1	1	1
140.00-120.00				1	1	1	1	1	1	1
T5	Yes	No	1	1	1	1	1	1	1	1
120.00-113.33				1	1	1	1	1	1	1
T6	Yes	No	1	1	1	1	1	1	1	1
113.33-106.67				1	1	1	1	1	1	1
T7	Yes	No	1	1	1	1	1	1	1	1
106.67-100.00				1	1	1	1	1	1	1
T8	Yes	No	1	1	1	1	1	1	1	1
100.00-80.00				1	1	1	1	1	1	1
T9	Yes	No	1	1	1	1	1	1	1	1
80.00-70.00				1	1	1	1	1	1	1
T10	Yes	No	1	1	1	1	1	1	1	1
70.00-60.00				1	1	1	1	1	1	1
T11	Yes	No	1	1	1	1	1	1	1	1
60.00-50.00				1	1	1	1	1	1	1
T12	Yes	No	1	1	1	1	1	1	1	1
50.00-40.00				1	1	1	1	1	1	1
T13	Yes	No	1	1	1	1	1	1	1	1
40.00-20.00				1	1	1	1	1	1	1
T14	Yes	No	1	1	1	1	1	1	1	1
20.00-10.00				1	1	1	1	1	1	1
T15	Yes	No	1	1	1	1	1	1	1	1
10.00-0.00				1	1	1	1	1	1	1

[1]*Note: K factors are applied to member segment lengths. K-braces without inner supporting members will have the K factor in the out-of-plane direction applied to the overall length.*

Tower Section Geometry *(cont'd)*

Tower Elevation ft	Leg		Diagonal		Top Girt		Bottom Girt		Mid Girt		Long Horizontal		Short Horizontal	
	Net Width Deduct in	U	Net Width Deduct in	U	Net Width Deduct in	U	Net Width Deduct in	U	Net Width Deduct in	U	Net Width Deduct in	U	Net Width Deduct in	U
T1	0.0000	1	0.0000	0.75	0.0000	0.75	0.0000	0.75	0.0000	0.75	0.0000	0.75	0.0000	0.75
195.00-180.00														
T2	0.0000	1	0.0000	0.75	0.0000	0.75	0.0000	0.75	0.0000	0.75	0.0000	0.75	0.0000	0.75
180.00-160.00														
T3	0.0000	1	0.0000	0.75	0.0000	0.75	0.0000	0.75	0.0000	0.75	0.0000	0.75	0.0000	0.75
160.00-140.00														
T4	0.0000	1	0.0000	0.75	0.0000	0.75	0.0000	0.75	0.0000	0.75	0.0000	0.75	0.0000	0.75
140.00-120.00														
T5	0.0000	1	0.0000	0.75	0.0000	0.75	0.0000	0.75	0.0000	0.75	0.0000	0.75	0.0000	0.75
120.00-113.33														
T6	0.0000	1	0.0000	0.75	0.0000	0.75	0.0000	0.75	0.0000	0.75	0.0000	0.75	0.0000	0.75
113.33-106.67														

Tower Elevation ft	Leg		Diagonal		Top Girt		Bottom Girt		Mid Girt		Long Horizontal		Short Horizontal	
	Net Width Deduct in	U	Net Width Deduct in	U	Net Width Deduct in	U	Net Width Deduct in	U	Net Width Deduct in	U	Net Width Deduct in	U	Net Width Deduct in	U
T7 106.67-100.00	0.0000	1	0.0000	0.75	0.0000	0.75	0.0000	0.75	0.0000	0.75	0.0000	0.75	0.0000	0.75
T8 100.00-80.00	0.0000	1	0.0000	0.75	0.0000	0.75	0.0000	0.75	0.0000	0.75	0.0000	0.75	0.0000	0.75
T9 80.00-70.00	0.0000	1	0.0000	0.75	0.0000	0.75	0.0000	0.75	0.0000	0.75	0.0000	0.75	0.0000	0.75
T10 70.00-60.00	0.0000	1	0.0000	0.75	0.0000	0.75	0.0000	0.75	0.0000	0.75	0.0000	0.75	0.0000	0.75
T11 60.00-50.00	0.0000	1	0.0000	0.75	0.0000	0.75	0.0000	0.75	0.0000	0.75	0.0000	0.75	0.0000	0.75
T12 50.00-40.00	0.0000	1	0.0000	0.75	0.0000	0.75	0.0000	0.75	0.0000	0.75	0.0000	0.75	0.0000	0.75
T13 40.00-20.00	0.0000	1	0.0000	0.75	0.0000	0.75	0.0000	0.75	0.0000	0.75	0.0000	0.75	0.0000	0.75
T14 20.00-10.00	0.0000	1	0.0000	0.75	0.0000	0.75	0.0000	0.75	0.0000	0.75	0.0000	0.75	0.0000	0.75
T15 10.00-0.00	0.0000	1	0.0000	0.75	0.0000	0.75	0.0000	0.75	0.0000	0.75	0.0000	0.75	0.0000	0.75

Tower Section Geometry *(cont'd)*

Tower Elevation ft	Leg Connection Type	Leg		Diagonal		Top Girt		Bottom Girt		Mid Girt		Long Horizontal		Short Horizontal	
		Bolt Size in	No.	Bolt Size in	No.	Bolt Size in	No.	Bolt Size in	No.	Bolt Size in	No.	Bolt Size in	No.	Bolt Size in	No.
T1 195.00-180.00	Flange	0.7500 A325N	0	0.6250 A325X	1	0.6250 A325X	1	0.6250 A325N	0	0.6250 A325N	0	0.6250 A325N	0	0.6250 A325N	0
T2 180.00-160.00	Flange	0.7500 A325N	0	0.6250 A325X	1	0.6250 A325X	1	0.6250 A325N	0	0.6250 A325N	0	0.6250 A325N	0	0.6250 A325N	0
T3 160.00-140.00	Flange	0.7500 A325N	0	0.6250 A325X	1	0.6250 A325N	0	0.6250 A325N	0	0.6250 A325N	0	0.6250 A325N	0	0.6250 A325N	0
T4 140.00-120.00	Flange	0.7500 A325N	0	0.6250 A325X	1	0.6250 A325N	0	0.6250 A325N	0	0.6250 A325N	0	0.6250 A325N	0	0.6250 A325N	0
T5 120.00-113.33	Flange	0.7500 A325N	0	0.6250 A325X	1	0.6250 A325N	0	0.0000 A325N	0	0.6250 A325N	0	0.6250 A325N	0	0.6250 A325N	0
T6 113.33-106.67	Flange	0.7500 A325N	0	0.6250 A325X	1	0.6250 A325N	0	0.0000 A325N	0	0.6250 A325N	0	0.6250 A325N	0	0.6250 A325N	0
T7 106.67-100.00	Flange	0.7500 A325N	0	0.6250 A325X	1	0.6250 A325N	0	0.6250 A325N	0	0.6250 A325N	0	0.6250 A325N	0	0.6250 A325N	0
T8 100.00-80.00	Flange	0.7500 A325N	0	0.7500 A325X	1	0.6250 A325N	0	0.6250 A325N	0	0.6250 A325N	0	0.6250 A325N	0	0.6250 A325N	0
T9 80.00-70.00	Flange	0.7500 A325N	0	0.7500 A325X	1	0.6250 A325N	0	0.0000 A325N	0	0.6250 A325N	0	0.6250 A325N	0	0.6250 A325N	0
T10 70.00-60.00	Flange	0.7500 A325N	0	0.7500 A325X	1	0.6250 A325N	0	0.0000 A325N	0	0.6250 A325N	0	0.6250 A325N	0	0.6250 A325N	0
T11 60.00-50.00	Flange	0.7500 A325N	0	0.7500 A325X	1	0.6250 A325N	0	0.0000 A325N	0	0.6250 A325N	0	0.6250 A325N	0	0.6250 A325N	0
T12 50.00-40.00	Flange	0.7500 A325N	0	0.7500 A325X	1	0.6250 A325N	0	0.6250 A325N	0	0.6250 A325N	0	0.6250 A325N	0	0.6250 A325N	0
T13 40.00-20.00	Flange	0.7500 A325N	0	0.7500 A325X	1	0.6250 A325N	0	0.0000 A325N	0	0.6250 A325N	0	0.6250 A325N	0	0.6250 A325N	0
T14 20.00-10.00	Flange	1.5000 A572-50	8	0.7500 A325X	1	0.6250 A325N	0	0.0000 A325N	0	0.6250 A325N	0	0.6250 A325N	0	0.6250 A325N	0

Tower Elevation ft	Leg Connection Type	Leg Bolt Size in	Leg No.	Diagonal Bolt Size in	Diagonal No.	Top Girt Bolt Size in	Top Girt No.	Bottom Girt Bolt Size in	Bottom Girt No.	Mid Girt Bolt Size in	Mid Girt No.	Long Horizontal Bolt Size in	Long Horizontal No.	Short Horizontal Bolt Size in	Short Horizontal No.
T15 10.00-0.00	Flange	1.5000 A572-50	8	0.7500 A325X	1	0.6250 A325N	0	0.6250 A325N	0	0.6250 A325N	0	0.6250 A325N	0	0.6250 A325N	0

Feed Line/Linear Appurtenances - Entered As Round Or Flat

Description	Face or Leg	Allow Shield	Component Type	Placement ft	Face Offset in	Lateral Offset (Frac FW)	#	# Per Row	Clear Spacing in	Width or Diameter in	Perimeter in	Weight plf
1-5/8"	A	Yes	Ar (CfAe)	192.00 - 10.00	0.0000	-0.15	7	7	0.5000	1.9800		0.82
1-5/8"	A	Yes	Ar (CfAe)	192.00 - 10.00	0.0000	-0.05	6	6	0.5000	1.9800		0.82
Feedline Ladder (Af) 1.5" ***	A	Yes	Af (CfAe)	192.00 - 10.00	0.0000	-0.1	1	1	0.5000	1.5000	6.0000	4.20
7/8" ***	B	Yes	Ar (CfAe)	184.00 - 140.00	0.0000	-0.3	1	1	0.5000	1.1100		0.54
1-1/4"	C	Yes	Ar (CfAe)	182.00 - 10.00	0.0000	0.1	4	4	0.5000	1.5500		0.66
Feedline Ladder (Af) 1.5" ***	C	Yes	Af (CfAe)	182.00 - 10.00	0.0000	0.1	1	1	0.5000	1.5000	6.0000	4.20
1-5/8"	B	Yes	Ar (CfAe)	152.00 - 10.00	-2.0000	0.15	12	9	0.5000	1.9800		0.82
3" Rigid Conduit	B	Yes	Ar (CfAe)	152.00 - 10.00	-4.0000	0.15	1	1	0.5000	3.0000		1.78
Feedline Ladder (Af) 1.5" ***	B	Yes	Af (CfAe)	152.00 - 10.00	-2.0000	0.15	1	1	0.5000	0.0000	1.5000	4.20
7/8	B	Yes	Ar (CfAe)	140.00 - 10.00	0.0000	-0.3	4	2	0.5000	1.1100		0.54
CATEGORY 5e (1 WIRE) ***	B	Yes	Ar (CfAe)	100.00 - 10.00	0.0000	-0.29	2	1	0.5000	1.0000		0.21
1-5/8"	B	Yes	Ar (CfAe)	162.00 - 10.00	0.0000	0.25	12	6	0.5000	1.9800		0.82
Feedline Ladder (Af) 1.5" *	B	Yes	Af (CfAe)	162.00 - 10.00	0.0000	0.25	1	1	0.5000	1.5000	6.0000	4.20
Climbing Ladder	B	Yes	Af (CfAe)	195.00 - 10.00	0.0000	0	1	1	0.5000	1.5000	6.0000	4.20
Safety Line 3/8	B	Yes	Ar (CfAe)	195.00 - 10.00	0.0000	0	1	1	0.3750	0.3750		0.22

Feed Line/Linear Appurtenances Section Areas

Tower Section	Tower Elevation ft	Face	A_R ft^2	A_F ft^2	C_AA_A In Face ft^2	C_AA_A Out Face ft^2	Weight K
T1	195.00-180.00	A	25.740	1.500	0.000	0.000	0.18
		B	0.839	1.875	0.000	0.000	0.07
		C	1.033	0.250	0.000	0.000	0.01

Tower Section	Tower Elevation ft	Face	A_R ft^2	A_F ft^2	C_AA_A In Face ft^2	C_AA_A Out Face ft^2	Weight K
T2	180.00-160.00	A	42.900	2.500	0.000	0.000	0.30
		B	4.455	2.750	0.000	0.000	0.13
		C	10.333	2.500	0.000	0.000	0.14
T3	160.00-140.00	A	42.900	2.500	0.000	0.000	0.30
		B	43.095	5.000	0.000	0.000	0.57
		C	10.333	2.500	0.000	0.000	0.14
T4	140.00-120.00	A	42.900	2.500	0.000	0.000	0.30
		B	58.825	5.000	0.000	0.000	0.73
		C	10.333	2.500	0.000	0.000	0.14
T5	120.00-113.33	A	14.300	0.833	0.000	0.000	0.10
		B	19.608	1.667	0.000	0.000	0.24
		C	3.444	0.833	0.000	0.000	0.05
T6	113.33-106.67	A	14.300	0.833	0.000	0.000	0.10
		B	19.608	1.667	0.000	0.000	0.24
		C	3.444	0.833	0.000	0.000	0.05
T7	106.67-100.00	A	14.300	0.833	0.000	0.000	0.10
		B	19.608	1.667	0.000	0.000	0.24
		C	3.444	0.833	0.000	0.000	0.05
T8	100.00-80.00	A	42.900	2.500	0.000	0.000	0.30
		B	60.492	5.000	0.000	0.000	0.74
		C	10.333	2.500	0.000	0.000	0.14
T9	80.00-70.00	A	21.450	1.250	0.000	0.000	0.15
		B	30.246	2.500	0.000	0.000	0.37
		C	5.167	1.250	0.000	0.000	0.07
T10	70.00-60.00	A	21.450	1.250	0.000	0.000	0.15
		B	30.246	2.500	0.000	0.000	0.37
		C	5.167	1.250	0.000	0.000	0.07
T11	60.00-50.00	A	21.450	1.250	0.000	0.000	0.15
		B	30.246	2.500	0.000	0.000	0.37
		C	5.167	1.250	0.000	0.000	0.07
T12	50.00-40.00	A	21.450	1.250	0.000	0.000	0.15
		B	30.246	2.500	0.000	0.000	0.37
		C	5.167	1.250	0.000	0.000	0.07
T13	40.00-20.00	A	42.900	2.500	0.000	0.000	0.30
		B	60.492	5.000	0.000	0.000	0.74
		C	10.333	2.500	0.000	0.000	0.14
T14	20.00-10.00	A	21.450	1.250	0.000	0.000	0.15
		B	30.246	2.500	0.000	0.000	0.37
		C	5.167	1.250	0.000	0.000	0.07
T15	10.00-0.00	A	0.000	0.000	0.000	0.000	0.00
		B	0.000	0.000	0.000	0.000	0.00
		C	0.000	0.000	0.000	0.000	0.00

Feed Line/Linear Appurtenances Section Areas - With Ice

Tower Section	Tower Elevation ft	Face or Leg	Ice Thickness in	A_R ft^2	A_F ft^2	C_AA_A In Face ft^2	C_AA_A Out Face ft^2	Weight K
T1	195.00-180.00	A	0.924	7.655	30.012	0.000	0.000	0.63
		B		3.764	3.415	0.000	0.000	0.15
		C		0.566	1.480	0.000	0.000	0.04
T2	180.00-160.00	A	0.913	12.687	49.996	0.000	0.000	1.04
		B		9.196	7.049	0.000	0.000	0.32
		C		5.627	14.779	0.000	0.000	0.38
T3	160.00-140.00	A	0.899	12.596	49.965	0.000	0.000	1.03
		B		23.347	50.703	0.000	0.000	1.65
		C		5.581	14.749	0.000	0.000	0.37
T4	140.00-120.00	A	0.884	12.494	49.931	0.000	0.000	1.02

Tower Section	Tower Elevation ft	Face or Leg	Ice Thickness in	A_R ft^2	A_F ft^2	C_AA_A In Face ft^2	C_AA_A Out Face ft^2	Weight K
		B		28.810	67.311	0.000	0.000	2.12
		C		5.530	14.715	0.000	0.000	0.37
T5	120.00-113.33	A	0.873	4.139	16.635	0.000	0.000	0.34
		B		9.540	22.412	0.000	0.000	0.70
		C		1.831	4.896	0.000	0.000	0.12
T6	113.33-106.67	A	0.867	4.126	16.631	0.000	0.000	0.33
		B		9.506	22.398	0.000	0.000	0.70
		C		1.824	4.892	0.000	0.000	0.12
T7	106.67-100.00	A	0.860	4.111	16.626	0.000	0.000	0.33
		B		9.470	22.384	0.000	0.000	0.70
		C		1.817	4.887	0.000	0.000	0.12
T8	100.00-80.00	A	0.846	12.240	49.847	0.000	0.000	0.99
		B		32.661	67.056	0.000	0.000	2.16
		C		5.403	14.630	0.000	0.000	0.36
T9	80.00-70.00	A	0.828	6.059	24.903	0.000	0.000	0.49
		B		16.147	33.467	0.000	0.000	1.07
		C		2.671	7.295	0.000	0.000	0.18
T10	70.00-60.00	A	0.814	6.012	24.887	0.000	0.000	0.48
		B		16.006	33.420	0.000	0.000	1.06
		C		2.648	7.279	0.000	0.000	0.17
T11	60.00-50.00	A	0.797	5.958	24.869	0.000	0.000	0.48
		B		15.845	33.366	0.000	0.000	1.05
		C		2.621	7.261	0.000	0.000	0.17
T12	50.00-40.00	A	0.778	5.895	24.848	0.000	0.000	0.47
		B		15.655	33.303	0.000	0.000	1.03
		C		2.589	7.240	0.000	0.000	0.17
T13	40.00-20.00	A	0.750	11.600	49.633	0.000	0.000	0.92
		B		30.742	66.417	0.000	0.000	2.03
		C		5.083	14.417	0.000	0.000	0.33
T14	20.00-10.00	A	0.750	5.800	24.817	0.000	0.000	0.46
		B		15.371	33.208	0.000	0.000	1.01
		C		2.542	7.208	0.000	0.000	0.17
T15	10.00-0.00	A	0.750	0.000	0.000	0.000	0.000	0.00
		B		0.000	0.000	0.000	0.000	0.00
		C		0.000	0.000	0.000	0.000	0.00

Feed Line Shielding

Section	Elevation ft	Face	A_R ft^2	A_R Ice ft^2	A_F ft^2	A_F Ice ft^2
T1	195.00-180.00	A	0.000	3.727	2.512	3.530
		B	0.000	0.774	0.250	0.733
		C	0.000	0.209	0.118	0.198
T2	180.00-160.00	A	0.000	5.555	3.794	5.323
		B	0.000	1.514	0.602	1.451
		C	0.000	1.868	1.072	1.790
T3	160.00-140.00	A	0.000	4.503	3.576	5.006
		B	0.000	5.430	3.788	6.037
		C	0.000	1.511	1.011	1.680
T4	140.00-120.00	A	0.000	3.373	3.414	4.769
		B	0.000	5.270	4.800	7.450
		C	0.000	1.129	0.965	1.596
T5	120.00-113.33	A	0.000	1.068	1.097	1.530
		B	0.000	1.667	1.543	2.387
		C	0.000	0.357	0.310	0.511
T6	113.33-106.67	A	0.000	1.045	1.082	1.507

Section	Elevation ft	Face	A_R ft^2	A_R Ice ft^2	A_F ft^2	A_F Ice ft^2
		B	0.000	1.629	1.521	2.350
		C	0.000	0.349	0.306	0.503
T7	106.67-100.00	A	0.000	1.023	1.069	1.487
		B	0.000	1.594	1.503	2.317
		C	0.000	0.341	0.302	0.496
T8	100.00-80.00	A	0.000	2.954	3.773	5.238
		B	0.000	4.806	5.442	8.521
		C	0.000	0.983	1.066	1.743
T9	80.00-70.00	A	0.000	1.032	1.351	1.870
		B	0.000	1.674	1.948	3.034
		C	0.000	0.342	0.382	0.620
T10	70.00-60.00	A	0.000	0.994	1.327	1.833
		B	0.000	1.610	1.914	2.969
		C	0.000	0.329	0.375	0.607
T11	60.00-50.00	A	0.000	0.957	1.307	1.801
		B	0.000	1.547	1.886	2.910
		C	0.000	0.316	0.370	0.595
T12	50.00-40.00	A	0.000	0.920	1.290	1.772
		B	0.000	1.482	1.861	2.856
		C	0.000	0.303	0.365	0.583
T13	40.00-20.00	A	0.000	1.735	2.961	4.049
		B	0.000	2.786	4.272	6.501
		C	0.000	0.568	0.837	1.326
T14	20.00-10.00	A	0.000	0.856	1.460	1.996
		B	0.000	1.374	2.107	3.206
		C	0.000	0.280	0.413	0.654
T15	10.00-0.00	A	0.000	0.000	0.000	0.000
		B	0.000	0.000	0.000	0.000
		C	0.000	0.000	0.000	0.000

Feed Line Center of Pressure

Section	Elevation ft	CP_X in	CP_Z in	CP_X Ice in	CP_Z Ice in
T1	195.00-180.00	-6.6636	-1.5029	-3.2417	-1.1617
T2	180.00-160.00	-7.2289	-0.0058	-3.8718	-0.5760
T3	160.00-140.00	0.5534	0.6194	1.2006	-0.1572
T4	140.00-120.00	2.9173	0.2183	2.9552	0.2434
T5	120.00-113.33	3.1211	0.2304	3.2014	0.2559
T6	113.33-106.67	3.2914	0.2416	3.3706	0.2663
T7	106.67-100.00	3.4551	0.2524	3.5320	0.2762
T8	100.00-80.00	3.5100	-0.1693	3.7372	-0.4803
T9	80.00-70.00	4.1942	-0.2010	4.5454	-0.5853
T10	70.00-60.00	4.4342	-0.2117	4.7953	-0.6102
T11	60.00-50.00	4.3155	-0.2054	4.7594	-0.5971
T12	50.00-40.00	4.5353	-0.2153	4.9886	-0.6151
T13	40.00-20.00	4.6344	-0.2192	5.1223	-0.6120
T14	20.00-10.00	4.9154	-0.2318	5.4262	-0.6486
T15	10.00-0.00	0.0000	0.0000	0.0000	0.0000

Discrete Tower Loads

Description	Face or Leg	Offset Type	Offsets: Horz Lateral Vert ft ft ft	Azimuth Adjustment °	Placement ft		C_AA_A Front ft^2	C_AA_A Side ft^2	Weight K
Lightning Rod	C	From Leg	0.00	0.0000	195.00	No Ice	0.25	0.25	0.03
			0.00			1/2" Ice	0.66	0.66	0.03
			0.00			1" Ice	0.97	0.97	0.04
						2" Ice	1.49	1.49	0.06
						4" Ice	2.68	2.68	0.14
***									
AIR 21 B2A/B4P w/ Mount Pipe	A	From Leg	3.00	0.0000	192.00	No Ice	7.09	6.02	0.12
			0.00			1/2" Ice	7.78	7.17	0.18
			1.50			1" Ice	8.37	8.03	0.25
						2" Ice	9.60	9.79	0.40
						4" Ice	12.20	13.53	0.86
AIR 21 B2A/B4P w/ Mount Pipe	B	From Leg	3.00	0.0000	192.00	No Ice	7.09	6.02	0.12
			0.00			1/2" Ice	7.78	7.17	0.18
			1.50			1" Ice	8.37	8.03	0.25
						2" Ice	9.60	9.79	0.40
						4" Ice	12.20	13.53	0.86
AIR 21 B2A/B4P w/ Mount Pipe	C	From Leg	3.00	0.0000	192.00	No Ice	7.09	6.02	0.12
			0.00			1/2" Ice	7.78	7.17	0.18
			1.50			1" Ice	8.37	8.03	0.25
						2" Ice	9.60	9.79	0.40
						4" Ice	12.20	13.53	0.86
AIR 21 B4A/B2P w/ Mount Pipe	A	From Leg	3.00	0.0000	192.00	No Ice	7.09	6.02	0.12
			0.00			1/2" Ice	7.78	7.17	0.18
			1.50			1" Ice	8.37	8.03	0.24
						2" Ice	9.60	9.79	0.40
						4" Ice	12.20	13.53	0.86
AIR 21 B4A/B2P w/ Mount Pipe	B	From Leg	3.00	0.0000	192.00	No Ice	7.09	6.02	0.12
			0.00			1/2" Ice	7.78	7.17	0.18
			1.50			1" Ice	8.37	8.03	0.24
						2" Ice	9.60	9.79	0.40
						4" Ice	12.20	13.53	0.86
AIR 21 B4A/B2P w/ Mount Pipe	C	From Leg	3.00	0.0000	192.00	No Ice	7.09	6.02	0.12
			0.00			1/2" Ice	7.78	7.17	0.18
			1.50			1" Ice	8.37	8.03	0.24
						2" Ice	9.60	9.79	0.40
						4" Ice	12.20	13.53	0.86
KRY 112 144/1	A	From Leg	3.00	0.0000	192.00	No Ice	0.41	0.19	0.01
			0.00			1/2" Ice	0.50	0.26	0.01
			2.00			1" Ice	0.60	0.33	0.02
						2" Ice	0.82	0.51	0.03
						4" Ice	1.36	0.97	0.08
KRY 112 144/1	B	From Leg	3.00	0.0000	192.00	No Ice	0.41	0.19	0.01
			0.00			1/2" Ice	0.50	0.26	0.01
			2.00			1" Ice	0.60	0.33	0.02
						2" Ice	0.82	0.51	0.03
						4" Ice	1.36	0.97	0.08
KRY 112 144/1	C	From Leg	3.00	0.0000	192.00	No Ice	0.41	0.19	0.01
			0.00			1/2" Ice	0.50	0.26	0.01
			2.00			1" Ice	0.60	0.33	0.02
						2" Ice	0.82	0.51	0.03
						4" Ice	1.36	0.97	0.08
(3) T-Frames	C	None		0.0000	192.00	No Ice	30.27	30.27	1.42
						1/2" Ice	41.24	41.24	1.99
						1" Ice	52.21	52.21	2.56
						2" Ice	74.15	74.15	3.69
						4" Ice	118.03	118.03	5.96

Description	Face or Leg	Offset Type	Offsets: Horz Lateral Vert ft ft ft	Azimuth Adjustment °	Placement ft		C_AA_A Front ft^2	C_AA_A Side ft^2	Weight K
***									
PD1151	A	From Leg	3.00	0.0000	178.00	No Ice	2.11	2.11	0.02
			0.00			1/2" Ice	4.74	4.74	0.04
			0.00			1" Ice	7.37	7.37	0.07
						2" Ice	12.63	12.63	0.12
						4" Ice	23.15	23.15	0.22
***									
APXVTM14-C-I20 w/Mount Pipe	A	From Leg	3.00	0.0000	178.50	No Ice	7.13	4.96	0.08
			0.00			1/2" Ice	7.66	5.75	0.13
			1.50			1" Ice	8.18	6.47	0.19
						2" Ice	9.26	8.01	0.34
						4" Ice	11.53	11.41	0.75
APXVTM14-C-I20 w/Mount Pipe	B	From Leg	3.00	0.0000	178.50	No Ice	7.13	4.96	0.08
			0.00			1/2" Ice	7.66	5.75	0.13
			1.50			1" Ice	8.18	6.47	0.19
						2" Ice	9.26	8.01	0.34
						4" Ice	11.53	11.41	0.75
APXVTM14-C-I20 w/Mount Pipe	C	From Leg	3.00	0.0000	178.50	No Ice	7.13	4.96	0.08
			0.00			1/2" Ice	7.66	5.75	0.13
			1.50			1" Ice	8.18	6.47	0.19
						2" Ice	9.26	8.01	0.34
						4" Ice	11.53	11.41	0.75
TD-RRH8x20-25	A	From Leg	3.00	0.0000	178.50	No Ice	4.72	1.70	0.07
			0.00			1/2" Ice	5.01	1.92	0.10
			-5.00			1" Ice	5.32	2.14	0.13
						2" Ice	5.95	2.62	0.20
						4" Ice	7.31	3.68	0.40
TD-RRH8x20-25	B	From Leg	3.00	0.0000	178.50	No Ice	4.72	1.70	0.07
			0.00			1/2" Ice	5.01	1.92	0.10
			-5.00			1" Ice	5.32	2.14	0.13
						2" Ice	5.95	2.62	0.20
						4" Ice	7.31	3.68	0.40
TD-RRH8x20-25	C	From Leg	3.00	0.0000	178.50	No Ice	4.72	1.70	0.07
			0.00			1/2" Ice	5.01	1.92	0.10
			-5.00			1" Ice	5.32	2.14	0.13
						2" Ice	5.95	2.62	0.20
						4" Ice	7.31	3.68	0.40
APXVSPP18-C-A20 w/Mount Pipe	A	From Leg	3.00	0.0000	178.50	No Ice	8.50	6.95	0.08
			0.00			1/2" Ice	9.15	8.13	0.15
			1.50			1" Ice	9.77	9.02	0.23
						2" Ice	11.03	10.84	0.41
						4" Ice	13.68	14.85	0.91
APXVSPP18-C-A20 w/Mount Pipe	B	From Leg	3.00	0.0000	178.50	No Ice	8.50	6.95	0.08
			0.00			1/2" Ice	9.15	8.13	0.15
			1.50			1" Ice	9.77	9.02	0.23
						2" Ice	11.03	10.84	0.41
						4" Ice	13.68	14.85	0.91
APXVSPP18-C-A20 w/Mount Pipe	C	From Leg	3.00	0.0000	178.50	No Ice	8.50	6.95	0.08
			0.00			1/2" Ice	9.15	8.13	0.15
			1.50			1" Ice	9.77	9.02	0.23
						2" Ice	11.03	10.84	0.41
						4" Ice	13.68	14.85	0.91
1900 MHz RRU	A	From Leg	1.00	0.0000	175.00	No Ice	2.70	2.77	0.06
			0.00			1/2" Ice	2.94	3.01	0.08
			2.00			1" Ice	3.18	3.26	0.11
						2" Ice	3.70	3.78	0.18
						4" Ice	4.85	4.93	0.35

Description	Face or Leg	Offset Type	Offsets: Horz Lateral Vert ft ft ft	Azimuth Adjustment °	Placement ft		C_AA_A Front ft^2	C_AA_A Side ft^2	Weight K
1900 MHz RRU	B	From Leg	1.00 0.00 2.00	0.0000	175.00	No Ice 1/2" Ice 1" Ice 2" Ice 4" Ice	2.70 2.94 3.18 3.70 4.85	2.77 3.01 3.26 3.78 4.93	0.06 0.08 0.11 0.18 0.35
1900 MHz RRU	C	From Leg	1.00 0.00 2.00	0.0000	175.00	No Ice 1/2" Ice 1" Ice 2" Ice 4" Ice	2.70 2.94 3.18 3.70 4.85	2.77 3.01 3.26 3.78 4.93	0.06 0.08 0.11 0.18 0.35
800 MHz RRU	A	From Leg	1.00 0.00 -1.50	0.0000	175.00	No Ice 1/2" Ice 1" Ice 2" Ice 4" Ice	2.49 2.71 2.93 3.41 4.46	2.07 2.27 2.48 2.93 3.93	0.05 0.07 0.10 0.16 0.32
800 MHz RRU	B	From Leg	1.00 0.00 -1.50	0.0000	175.00	No Ice 1/2" Ice 1" Ice 2" Ice 4" Ice	2.49 2.71 2.93 3.41 4.46	2.07 2.27 2.48 2.93 3.93	0.05 0.07 0.10 0.16 0.32
800 MHz RRU	C	From Leg	1.00 0.00 -1.50	0.0000	175.00	No Ice 1/2" Ice 1" Ice 2" Ice 4" Ice	2.49 2.71 2.93 3.41 4.46	2.07 2.27 2.48 2.93 3.93	0.05 0.07 0.10 0.16 0.32
800 MHz Filter	A	From Leg	1.00 0.00 -1.50	0.0000	175.00	No Ice 1/2" Ice 1" Ice 2" Ice 4" Ice	0.78 0.90 1.03 1.31 1.99	0.29 0.38 0.48 0.70 1.24	0.01 0.01 0.02 0.04 0.10
800 MHz Filter	B	From Leg	1.00 0.00 -1.50	0.0000	175.00	No Ice 1/2" Ice 1" Ice 2" Ice 4" Ice	0.78 0.90 1.03 1.31 1.99	0.29 0.38 0.48 0.70 1.24	0.01 0.01 0.02 0.04 0.10
800 MHz Filter	C	From Leg	1.00 0.00 -1.50	0.0000	175.00	No Ice 1/2" Ice 1" Ice 2" Ice 4" Ice	0.78 0.90 1.03 1.31 1.99	0.29 0.38 0.48 0.70 1.24	0.01 0.01 0.02 0.04 0.10
(2) ACU-A20-N RET	A	From Leg	1.00 0.00 -1.50	0.0000	175.00	No Ice 1/2" Ice 1" Ice 2" Ice 4" Ice	0.08 0.12 0.17 0.30 0.67	0.14 0.19 0.25 0.40 0.80	0.00 0.00 0.00 0.01 0.04
ACU-A20-N RET	B	From Leg	1.00 0.00 -1.50	0.0000	175.00	No Ice 1/2" Ice 1" Ice 2" Ice 4" Ice	0.08 0.12 0.17 0.30 0.67	0.14 0.19 0.25 0.40 0.80	0.00 0.00 0.00 0.01 0.04
ACU-A20-N RET	C	From Leg	1.00 0.00 -1.50	0.0000	175.00	No Ice 1/2" Ice 1" Ice 2" Ice 4" Ice	0.08 0.12 0.17 0.30 0.67	0.14 0.19 0.25 0.40 0.80	0.00 0.00 0.00 0.01 0.04
(3) T-Frames	C	None		0.0000	178.50	No Ice 1/2" Ice	30.27 41.24	30.27 41.24	1.42 1.99

Description	Face or Leg	Offset Type	Offsets: Horz Lateral Vert ft ft ft	Azimuth Adjustment °	Placement ft		C_AA_A Front ft^2	C_AA_A Side ft^2	Weight K
						1" Ice	52.21	52.21	2.56
						2" Ice	74.15	74.15	3.69
						4" Ice	118.03	118.03	5.96
Pipe Mount [PM 601-3]	C	None		0.0000	175.00	No Ice	4.39	4.39	0.20
						1/2" Ice	5.48	5.48	0.24
						1" Ice	6.57	6.57	0.28
						2" Ice	8.75	8.75	0.36
						4" Ice	13.11	13.11	0.53
***									
(3) AM-X-CD-14-65-00T w/ Mount Pipe	A	From Leg	3.00	0.0000	150.00	No Ice	6.22	4.49	0.06
			0.00			1/2" Ice	6.92	5.53	0.11
			0.50			1" Ice	7.51	6.29	0.17
						2" Ice	8.71	7.93	0.31
						4" Ice	11.27	11.40	0.70
(3) AM-X-CD-14-65-00T w/ Mount Pipe	B	From Leg	3.00	0.0000	150.00	No Ice	6.22	4.49	0.06
			0.00			1/2" Ice	6.92	5.53	0.11
			0.50			1" Ice	7.51	6.29	0.17
						2" Ice	8.71	7.93	0.31
						4" Ice	11.27	11.40	0.70
(3) AM-X-CD-14-65-00T w/ Mount Pipe	C	From Leg	3.00	0.0000	150.00	No Ice	6.22	4.49	0.06
			0.00			1/2" Ice	6.92	5.53	0.11
			0.50			1" Ice	7.51	6.29	0.17
						2" Ice	8.71	7.93	0.31
						4" Ice	11.27	11.40	0.70
7770 w/Mount Pipe	A	From Leg	3.00	0.0000	150.00	No Ice	6.58	4.94	0.07
			0.00			1/2" Ice	7.21	5.86	0.12
			0.50			1" Ice	7.80	6.64	0.19
						2" Ice	9.01	8.25	0.33
						4" Ice	11.58	11.84	0.75
7770 w/Mount Pipe	B	From Leg	3.00	0.0000	150.00	No Ice	6.58	4.94	0.07
			0.00			1/2" Ice	7.21	5.86	0.12
			0.50			1" Ice	7.80	6.64	0.19
						2" Ice	9.01	8.25	0.33
						4" Ice	11.58	11.84	0.75
7770 w/Mount Pipe	C	From Leg	3.00	0.0000	150.00	No Ice	6.58	4.94	0.07
			0.00			1/2" Ice	7.21	5.86	0.12
			0.50			1" Ice	7.80	6.64	0.19
						2" Ice	9.01	8.25	0.33
						4" Ice	11.58	11.84	0.75
(2) TT19-08BP111-001 TMA	A	From Leg	3.00	0.0000	150.00	No Ice	0.00	0.52	0.02
			0.00			1/2" Ice	0.00	0.62	0.02
			0.50			1" Ice	0.00	0.74	0.03
						2" Ice	0.00	0.99	0.05
						4" Ice	0.00	1.59	0.12
(2) TT19-08BP111-001 TMA	B	From Leg	3.00	0.0000	150.00	No Ice	0.00	0.52	0.02
			0.00			1/2" Ice	0.00	0.62	0.02
			0.50			1" Ice	0.00	0.74	0.03
						2" Ice	0.00	0.99	0.05
						4" Ice	0.00	1.59	0.12
(2) TT19-08BP111-001 TMA	C	From Leg	3.00	0.0000	150.00	No Ice	0.00	0.52	0.02
			0.00			1/2" Ice	0.00	0.62	0.02
			0.50			1" Ice	0.00	0.74	0.03
						2" Ice	0.00	0.99	0.05
						4" Ice	0.00	1.59	0.12
LGP13519 Diplexer	A	From Leg	3.00	0.0000	150.00	No Ice	0.34	0.21	0.01
			0.00			1/2" Ice	0.42	0.28	0.01
			0.50			1" Ice	0.51	0.36	0.01

Description	Face or Leg	Offset Type	Offsets: Horz Lateral Vert ft ft ft	Azimuth Adjustment °	Placement ft		C_AA_A Front ft^2	C_AA_A Side ft^2	Weight K
						2" Ice	0.73	0.55	0.02
						4" Ice	1.25	1.03	0.07
LGP13519 Diplexer	B	From Leg	3.00	0.0000	150.00	No Ice	0.34	0.21	0.01
			0.00			1/2" Ice	0.42	0.28	0.01
			0.50			1" Ice	0.51	0.36	0.01
						2" Ice	0.73	0.55	0.02
						4" Ice	1.25	1.03	0.07
LGP13519 Diplexer	C	From Leg	3.00	0.0000	150.00	No Ice	0.34	0.21	0.01
			0.00			1/2" Ice	0.42	0.28	0.01
			0.50			1" Ice	0.51	0.36	0.01
						2" Ice	0.73	0.55	0.02
						4" Ice	1.25	1.03	0.07
DBC-750	A	From Leg	3.00	0.0000	150.00	No Ice	0.72	0.13	0.01
			0.00			1/2" Ice	0.83	0.19	0.01
			0.50			1" Ice	0.96	0.26	0.02
						2" Ice	1.24	0.43	0.03
						4" Ice	1.90	0.87	0.09
DBC-750	B	From Leg	3.00	0.0000	150.00	No Ice	0.72	0.13	0.01
			0.00			1/2" Ice	0.83	0.19	0.01
			0.50			1" Ice	0.96	0.26	0.02
						2" Ice	1.24	0.43	0.03
						4" Ice	1.90	0.87	0.09
DBC-750	C	From Leg	3.00	0.0000	150.00	No Ice	0.72	0.13	0.01
			0.00			1/2" Ice	0.83	0.19	0.01
			0.50			1" Ice	0.96	0.26	0.02
						2" Ice	1.24	0.43	0.03
						4" Ice	1.90	0.87	0.09
(2) RRUS-11	A	From Leg	3.00	0.0000	150.00	No Ice	2.94	1.25	0.06
			0.00			1/2" Ice	3.17	1.41	0.07
			0.50			1" Ice	3.41	1.59	0.10
						2" Ice	3.91	1.96	0.15
						4" Ice	5.02	2.82	0.30
(2) RRUS-11	B	From Leg	3.00	0.0000	150.00	No Ice	2.94	1.25	0.06
			0.00			1/2" Ice	3.17	1.41	0.07
			0.50			1" Ice	3.41	1.59	0.10
						2" Ice	3.91	1.96	0.15
						4" Ice	5.02	2.82	0.30
(2) RRUS-11	C	From Leg	3.00	0.0000	150.00	No Ice	2.94	1.25	0.06
			0.00			1/2" Ice	3.17	1.41	0.07
			0.50			1" Ice	3.41	1.59	0.10
						2" Ice	3.91	1.96	0.15
						4" Ice	5.02	2.82	0.30
DC6-48-60-18-8F	A	From Leg	3.00	0.0000	150.50	No Ice	1.28	4.32	0.03
			0.00			1/2" Ice	1.40	4.60	0.06
			1.00			1" Ice	1.51	4.88	0.10
						2" Ice	1.75	5.49	0.18
						4" Ice	2.21	6.80	0.40
(3) T-Frames	C	None		0.0000	150.00	No Ice	21.88	21.88	1.07
						1/2" Ice	30.68	30.68	1.48
						1" Ice	39.48	39.48	1.90
						2" Ice	57.08	57.08	2.73
						4" Ice	92.28	92.28	4.40
***									
Sinclair SD312HL	A	From Leg	3.00	0.0000	138.00	No Ice	2.24	2.24	0.01
			0.00			1/2" Ice	2.64	2.64	0.03
			3.50			1" Ice	3.06	3.06	0.05
						2" Ice	3.91	3.91	0.11

Description	Face or Leg	Offset Type	Offsets: Horz Lateral Vert ft ft ft	Azimuth Adjustment °	Placement ft		C_AA_A Front ft^2	C_AA_A Side ft^2	Weight K
						4" Ice	5.72	5.72	0.28
Sinclair SD312HL	B	From Leg	3.00	0.0000	138.00	No Ice	2.24	2.24	0.01
			0.00			1/2" Ice	2.64	2.64	0.03
			3.50			1" Ice	3.06	3.06	0.05
						2" Ice	3.91	3.91	0.11
						4" Ice	5.72	5.72	0.28
Sinclair SD312HL	C	From Leg	3.00	0.0000	138.00	No Ice	2.24	2.24	0.01
			0.00			1/2" Ice	2.64	2.64	0.03
			3.50			1" Ice	3.06	3.06	0.05
						2" Ice	3.91	3.91	0.11
						4" Ice	5.72	5.72	0.28
(3) Standoffs	C	None		0.0000	138.00	No Ice	3.55	3.55	0.13
						1/2" Ice	6.19	6.19	0.19
						1" Ice	8.83	8.83	0.25
						2" Ice	14.11	14.11	0.37
						4" Ice	24.67	24.67	0.61
***									
Pipe Mount	A	From Leg	0.00	0.0000	101.00	No Ice	0.00	0.87	0.02
			0.00			1/2" Ice	0.00	1.11	0.02
			0.00			1" Ice	0.00	1.36	0.03
						2" Ice	0.00	1.90	0.06
						4" Ice	0.00	3.23	0.16
***									
(2) LPA-80063/4CF w/ Mount Pipe	A	From Leg	3.00	0.0000	161.00	No Ice	7.11	7.13	0.04
			0.00			1/2" Ice	7.58	7.83	0.10
			1.50			1" Ice	8.07	8.54	0.17
						2" Ice	9.06	10.02	0.34
						4" Ice	11.19	13.25	0.79
LPA-80063/4CF w/ Mount Pipe	B	From Leg	3.00	0.0000	161.00	No Ice	7.11	7.13	0.04
			0.00			1/2" Ice	7.58	7.83	0.10
			1.50			1" Ice	8.07	8.54	0.17
						2" Ice	9.06	10.02	0.34
						4" Ice	11.19	13.25	0.79
LPA-80063/4CF w/ Mount Pipe	C	From Leg	3.00	0.0000	161.00	No Ice	7.11	7.13	0.04
			0.00			1/2" Ice	7.58	7.83	0.10
			1.50			1" Ice	8.07	8.54	0.17
						2" Ice	9.06	10.02	0.34
						4" Ice	11.19	13.25	0.79
LPA-80063/6CF w/ Mount Pipe	B	From Leg	3.00	0.0000	161.00	No Ice	10.58	10.67	0.05
			0.00			1/2" Ice	11.24	11.93	0.14
			1.00			1" Ice	11.87	12.91	0.25
						2" Ice	13.16	14.92	0.48
						4" Ice	15.87	19.16	1.09
LPA-80063/6CF w/ Mount Pipe	C	From Leg	3.00	0.0000	161.00	No Ice	10.58	10.67	0.05
			0.00			1/2" Ice	11.24	11.93	0.14
			1.00			1" Ice	11.87	12.91	0.25
						2" Ice	13.16	14.92	0.48
						4" Ice	15.87	19.16	1.09
(2) DB-T1-6Z-8AB-0Z	A	From Leg	3.00	0.0000	161.00	No Ice	5.60	2.33	0.04
			0.00			1/2" Ice	5.92	2.56	0.08
			0.00			1" Ice	6.24	2.79	0.12
						2" Ice	6.91	3.28	0.21
						4" Ice	8.37	4.37	0.45
(2) DB-T1-6Z-8AB-0Z	B	From Leg	3.00	0.0000	161.00	No Ice	5.60	2.33	0.04
			0.00			1/2" Ice	5.92	2.56	0.08
			0.00			1" Ice	6.24	2.79	0.12
						2" Ice	6.91	3.28	0.21

Description	Face or Leg	Offset Type	Offsets: Horz Lateral Vert ft ft ft	Azimuth Adjustment °	Placement ft		C_AA_A Front ft^2	C_AA_A Side ft^2	Weight K
						4" Ice	8.37	4.37	0.45
(2) DB-T1-6Z-8AB-0Z	C	From Leg	3.00	0.0000	161.00	No Ice	5.60	2.33	0.04
			0.00			1/2" Ice	5.92	2.56	0.08
			0.00			1" Ice	6.24	2.79	0.12
						2" Ice	6.91	3.28	0.21
						4" Ice	8.37	4.37	0.45
(3) T-Frames	C	None		0.0000	161.00	No Ice	33.11	33.11	1.54
						1/2" Ice	44.90	44.90	2.16
						1" Ice	56.69	56.69	2.78
						2" Ice	80.27	80.27	4.01
						4" Ice	127.43	127.43	6.49
(2) SBNHH-1D65B w/ Mount Pipe	A	From Leg	3.00	0.0000	161.00	No Ice	8.53	7.00	0.08
			0.00			1/2" Ice	9.18	8.19	0.14
			1.00			1" Ice	9.80	9.08	0.22
						2" Ice	11.07	10.90	0.40
						4" Ice	13.72	14.93	0.91
(2) SBNHH-1D65B w/ Mount Pipe	B	From Leg	3.00	0.0000	161.00	No Ice	8.53	7.00	0.08
			0.00			1/2" Ice	9.18	8.19	0.14
			1.00			1" Ice	9.80	9.08	0.22
						2" Ice	11.07	10.90	0.40
						4" Ice	13.72	14.93	0.91
(2) SBNHH-1D65B w/ Mount Pipe	C	From Leg	3.00	0.0000	161.00	No Ice	8.53	7.00	0.08
			0.00			1/2" Ice	9.18	8.19	0.14
			1.00			1" Ice	9.80	9.08	0.22
						2" Ice	11.07	10.90	0.40
						4" Ice	13.72	14.93	0.91
RRH2X60-AWS	A	From Leg	3.00	0.0000	161.00	No Ice	2.19	1.43	0.04
			0.00			1/2" Ice	2.40	1.61	0.06
			1.00			1" Ice	2.61	1.80	0.08
						2" Ice	3.07	2.21	0.13
						4" Ice	4.09	3.13	0.26
RRH2X60-AWS	B	From Leg	3.00	0.0000	161.00	No Ice	2.19	1.43	0.04
			0.00			1/2" Ice	2.40	1.61	0.06
			1.00			1" Ice	2.61	1.80	0.08
						2" Ice	3.07	2.21	0.13
						4" Ice	4.09	3.13	0.26
RRH2X60-AWS	C	From Leg	3.00	0.0000	161.00	No Ice	2.19	1.43	0.04
			0.00			1/2" Ice	2.40	1.61	0.06
			1.00			1" Ice	2.61	1.80	0.08
						2" Ice	3.07	2.21	0.13
						4" Ice	4.09	3.13	0.26
RRH2X60-PCS	A	From Leg	3.00	0.0000	161.00	No Ice	2.57	1.93	0.05
			0.00			0.000%	2.79	2.13	0.07
			1.00			1" Ice	3.02	2.34	0.09
						2" Ice	3.52	2.80	0.14
						4" Ice	4.61	3.81	0.30
RRH2X60-PCS	B	From Leg	3.00	0.0000	161.00	No Ice	2.57	1.93	0.05
			0.00			1/2" Ice	2.79	2.13	0.07
			1.00			1" Ice	3.02	2.34	0.09
						2" Ice	3.52	2.80	0.14
						4" Ice	4.61	3.81	0.30
RRH2X60-PCS	C	From Leg	3.00	0.0000	161.00	No Ice	2.57	1.93	0.05
			0.00			1/2" Ice	2.79	2.13	0.07
			1.00			1" Ice	3.02	2.34	0.09
						2" Ice	3.52	2.80	0.14
						4" Ice	4.61	3.81	0.30
RRH2x60-700	A	From Leg	3.00	0.0000	161.00	No Ice	3.96	1.82	0.06

Description	Face or Leg	Offset Type	Offsets: Horz Lateral Vert ft ft ft	Azimuth Adjustment °	Placement ft		C_AA_A Front ft^2	C_AA_A Side ft^2	Weight K
			0.00			1/2" Ice	4.27	2.08	0.08
			1.00			1" Ice	4.60	2.36	0.11
						2" Ice	5.27	2.96	0.17
						4" Ice	6.72	4.25	0.35
RRH2x60-700	B	From Leg	3.00	0.0000	161.00	No Ice	3.96	1.82	0.06
			0.00			1/2" Ice	4.27	2.08	0.08
			1.00			1" Ice	4.60	2.36	0.11
						2" Ice	5.27	2.96	0.17
						4" Ice	6.72	4.25	0.35
RRH2x60-700	C	From Leg	3.00	0.0000	161.00	No Ice	3.96	1.82	0.06
			0.00			1/2" Ice	4.27	2.08	0.08
			1.00			1" Ice	4.60	2.36	0.11
						2" Ice	5.27	2.96	0.17
						4" Ice	6.72	4.25	0.35
(2) FD9R6004/2CL-3CL Diplexer	A	From Leg	3.00	0.0000	161.00	No Ice	0.37	0.08	0.00
			0.00			1/2" Ice	0.45	0.14	0.01
			1.00			1" Ice	0.54	0.20	0.01
						2" Ice	0.75	0.34	0.02
						4" Ice	1.28	0.74	0.06
(2) FD9R6004/2CL-3CL Diplexer	B	From Leg	3.00	0.0000	161.00	No Ice	0.37	0.08	0.00
			0.00			1/2" Ice	0.45	0.14	0.01
			1.00			1" Ice	0.54	0.20	0.01
						2" Ice	0.75	0.34	0.02
						4" Ice	1.28	0.74	0.06
(2) FD9R6004/2CL-3CL Diplexer	C	From Leg	3.00	0.0000	161.00	No Ice	0.37	0.08	0.00
			0.00			1/2" Ice	0.45	0.14	0.01
			1.00			1" Ice	0.54	0.20	0.01
						2" Ice	0.75	0.34	0.02
						4" Ice	1.28	0.74	0.06
***									

Dishes

Description	Face or Leg	Dish Type	Offset Type	Offsets: Horz Lateral Vert ft	Azimuth Adjustment °	3 dB Beam Width °	Elevation ft	Outside Diameter ft		Aperture Area ft^2	Weight K
RDH4518A	A	Paraboloid w/o Radome	From Leg	0.00	0.0000		101.00	2.00	No Ice	3.14	0.03
				0.00					1/2" Ice	3.41	0.04
				1.00					1" Ice	3.68	0.05
									2" Ice	4.21	0.08
									4" Ice	5.28	0.13

Load Combinations

Comb. No.	Description

Comb. No.	Description
1	Dead Only
2	Dead+Wind 0 deg - No Ice
3	Dead+Wind 30 deg - No Ice
4	Dead+Wind 60 deg - No Ice
5	Dead+Wind 90 deg - No Ice
6	Dead+Wind 120 deg - No Ice
7	Dead+Wind 150 deg - No Ice
8	Dead+Wind 180 deg - No Ice
9	Dead+Wind 210 deg - No Ice
10	Dead+Wind 240 deg - No Ice
11	Dead+Wind 270 deg - No Ice
12	Dead+Wind 300 deg - No Ice
13	Dead+Wind 330 deg - No Ice
14	Dead+Ice+Temp
15	Dead+Wind 0 deg+Ice+Temp
16	Dead+Wind 30 deg+Ice+Temp
17	Dead+Wind 60 deg+Ice+Temp
18	Dead+Wind 90 deg+Ice+Temp
19	Dead+Wind 120 deg+Ice+Temp
20	Dead+Wind 150 deg+Ice+Temp
21	Dead+Wind 180 deg+Ice+Temp
22	Dead+Wind 210 deg+Ice+Temp
23	Dead+Wind 240 deg+Ice+Temp
24	Dead+Wind 270 deg+Ice+Temp
25	Dead+Wind 300 deg+Ice+Temp
26	Dead+Wind 330 deg+Ice+Temp
27	Dead+Wind 0 deg - Service
28	Dead+Wind 30 deg - Service
29	Dead+Wind 60 deg - Service
30	Dead+Wind 90 deg - Service
31	Dead+Wind 120 deg - Service
32	Dead+Wind 150 deg - Service
33	Dead+Wind 180 deg - Service
34	Dead+Wind 210 deg - Service
35	Dead+Wind 240 deg - Service
36	Dead+Wind 270 deg - Service
37	Dead+Wind 300 deg - Service
38	Dead+Wind 330 deg - Service

Maximum Member Forces

Section No.	Elevation ft	Component Type	Condition	Gov. Load Comb.	Force K	Major Axis Moment kip-ft	Minor Axis Moment kip-ft
T1	195 - 180	Leg	Max Tension	12	7.04	-0.12	-0.08
			Max. Compression	10	-8.92	0.19	-0.13
			Max. Mx	5	-0.75	0.74	0.00
			Max. My	2	-0.48	-0.01	-0.74
			Max. Vy	11	-0.58	0.41	0.00
			Max. Vx	2	-0.60	-0.01	0.43
		Diagonal	Max Tension	3	1.84	0.00	0.00
			Max. Compression	3	-1.90	0.00	0.00
			Max. Mx	11	0.84	0.01	0.00
			Max. My	9	-1.75	-0.00	-0.00
			Max. Vy	24	-0.01	0.01	0.00
			Max. Vx	9	-0.00	0.00	0.00
		Top Girt	Max Tension	12	0.27	0.00	0.00
			Max. Compression	10	-0.25	0.00	0.00
			Max. Mx	14	0.02	-0.02	0.00

Section No.	Elevation ft	Component Type	Condition	Gov. Load Comb.	Force K	Major Axis Moment kip-ft	Minor Axis Moment kip-ft
			Max. Vy	14	-0.01	0.00	0.00
T2	180 - 160	Leg	Max Tension	12	30.30	-0.35	0.02
			Max. Compression	10	-37.12	0.86	0.01
			Max. Mx	12	30.11	-0.88	0.02
			Max. My	7	-2.32	-0.02	1.05
			Max. Vy	4	1.66	-0.88	-0.01
			Max. Vx	7	1.57	-0.01	-0.52
		Diagonal	Max Tension	3	3.66	0.00	0.00
			Max. Compression	2	-3.73	0.00	0.00
			Max. Mx	9	0.69	0.02	-0.00
			Max. My	13	3.20	0.01	0.00
			Max. Vy	24	-0.01	0.02	0.00
			Max. Vx	13	-0.00	0.00	0.00
		Top Girt	Max Tension	6	0.25	0.00	0.00
			Max. Compression	4	-0.24	0.00	0.00
			Max. Mx	14	0.00	-0.02	0.00
			Max. My	14	0.00	0.00	0.00
			Max. Vy	14	-0.01	0.00	0.00
			Max. Vx	14	-0.00	0.00	0.00
T3	160 - 140	Leg	Max Tension	12	69.22	-0.04	0.00
			Max. Compression	6	-79.76	0.34	0.00
			Max. Mx	12	38.99	-0.88	0.02
			Max. My	13	-3.49	-0.01	0.52
			Max. Vy	12	-1.20	-0.25	-0.01
			Max. Vx	11	-1.03	0.01	0.15
		Diagonal	Max Tension	3	6.40	0.00	0.00
			Max. Compression	9	-6.48	0.00	0.00
			Max. Mx	11	2.52	0.03	0.00
			Max. My	9	-5.60	-0.01	-0.01
			Max. Vy	23	-0.02	0.02	0.00
			Max. Vx	9	0.00	0.00	0.00
T4	140 - 120	Leg	Max Tension	4	105.07	-0.27	-0.00
			Max. Compression	6	-118.08	0.34	0.00
			Max. Mx	12	104.77	-0.35	-0.00
			Max. My	3	-5.48	-0.01	-0.41
			Max. Vy	12	-0.11	-0.32	-0.00
			Max. Vx	3	0.12	-0.01	-0.41
		Diagonal	Max Tension	3	6.72	0.00	0.00
			Max. Compression	9	-6.79	0.00	0.00
			Max. Mx	6	5.56	0.04	0.00
			Max. My	23	1.50	0.04	-0.00
			Max. Vy	17	0.03	0.04	0.00
			Max. Vx	24	0.00	0.00	0.00
T5	120 - 113.333	Leg	Max Tension	4	116.50	-0.35	-0.01
			Max. Compression	6	-130.49	0.48	-0.00
			Max. Mx	10	-130.18	0.48	0.01
			Max. My	3	-6.39	0.00	-0.41
			Max. Vy	12	0.07	-0.47	-0.00
			Max. Vx	3	0.06	0.00	-0.41
		Diagonal	Max Tension	9	6.59	0.00	0.00
			Max. Compression	9	-6.58	0.00	0.00
			Max. Mx	19	1.73	0.04	-0.00
			Max. My	24	1.77	0.04	-0.00
			Max. Vy	17	0.03	0.04	0.00
			Max. Vx	24	0.00	0.00	0.00
T6	113.333 - 106.667	Leg	Max Tension	4	127.20	-0.47	-0.01
			Max. Compression	6	-142.12	0.62	0.02
			Max. Mx	8	126.63	-0.63	0.01
			Max. My	9	-6.44	-0.00	0.64
			Max. Vy	8	0.07	-0.63	0.01

Section No.	Elevation ft	Component Type	Condition	Gov. Load Comb.	Force K	Major Axis Moment kip-ft	Minor Axis Moment kip-ft
			Max. Vx	9	-0.09	-0.00	0.64
		Diagonal	Max Tension	9	6.57	0.00	0.00
			Max. Compression	9	-6.61	0.00	0.00
			Max. Mx	19	1.63	0.04	0.01
			Max. My	19	-1.82	0.03	0.01
			Max. Vy	17	0.03	0.04	0.01
			Max. Vx	19	-0.00	0.00	0.00
T7	106.667 - 100	Leg	Max Tension	4	137.67	-0.62	0.00
			Max. Compression	6	-153.65	0.54	0.02
			Max. Mx	8	137.18	-0.63	0.01
			Max. My	9	-6.65	-0.00	0.64
			Max. Vy	8	-0.08	-0.63	0.01
			Max. Vx	9	0.08	-0.00	0.64
		Diagonal	Max Tension	9	6.71	0.00	0.00
			Max. Compression	9	-6.72	0.00	0.00
			Max. Mx	19	1.70	0.06	0.01
			Max. My	26	-1.98	0.04	-0.01
			Max. Vy	17	0.04	0.06	0.01
			Max. Vx	26	0.00	0.00	0.00
T8	100 - 80	Leg	Max Tension	4	167.35	-0.69	-0.00
			Max. Compression	6	-186.63	0.94	0.01
			Max. Mx	12	166.63	-0.99	-0.01
			Max. My	9	-8.12	-0.04	1.01
			Max. Vy	12	0.10	-0.99	-0.01
			Max. Vx	9	-0.13	-0.04	1.01
		Diagonal	Max Tension	13	7.03	0.00	0.00
			Max. Compression	13	-7.01	0.00	0.00
			Max. Mx	19	1.90	0.07	0.01
			Max. My	26	-2.03	0.05	-0.01
			Max. Vy	17	0.04	0.07	-0.01
			Max. Vx	26	0.00	0.00	0.00
T9	80 - 70	Leg	Max Tension	4	178.94	-0.99	-0.01
			Max. Compression	6	-199.62	0.92	0.01
			Max. Mx	12	178.34	-0.99	-0.01
			Max. My	3	-9.09	0.00	-1.05
			Max. Vy	12	-0.09	-0.99	-0.01
			Max. Vx	3	0.09	0.00	-1.05
		Diagonal	Max Tension	13	7.90	0.00	0.00
			Max. Compression	13	-7.99	0.00	0.00
			Max. Mx	17	1.71	0.10	-0.01
			Max. My	26	-2.46	0.08	-0.01
			Max. Vy	17	0.05	0.10	-0.01
			Max. Vx	26	0.00	0.00	0.00
T10	70 - 60	Leg	Max Tension	4	192.84	-0.89	-0.01
			Max. Compression	6	-215.60	0.73	0.00
			Max. Mx	10	-214.55	0.93	0.01
			Max. My	3	-9.55	0.00	-1.05
			Max. Vy	12	-0.09	-0.89	-0.01
			Max. Vx	9	0.12	0.00	1.05
		Diagonal	Max Tension	13	8.16	0.00	0.00
			Max. Compression	13	-8.19	0.00	0.00
			Max. Mx	17	1.84	0.13	0.02
			Max. My	26	-2.34	0.11	-0.02
			Max. Vy	17	0.06	0.13	0.02
			Max. Vx	26	0.00	0.00	0.00
T11	60 - 50	Leg	Max Tension	4	205.97	-0.78	-0.01
			Max. Compression	6	-230.76	1.87	0.02
			Max. Mx	10	-229.86	1.87	0.01
			Max. My	3	-10.69	0.01	-1.89
			Max. Vy	10	-0.20	1.87	0.01
			Max. Vx	9	-0.22	0.00	1.89

Section No.	Elevation ft	Component Type	Condition	Gov. Load Comb.	Force K	Major Axis Moment kip-ft	Minor Axis Moment kip-ft
		Diagonal	Max Tension	13	8.17	0.00	0.00
			Max. Compression	13	-8.19	0.00	0.00
			Max. Mx	17	1.61	0.13	0.01
			Max. My	26	-2.61	0.11	-0.02
			Max. Vy	17	0.06	0.13	0.01
			Max. Vx	26	0.00	0.00	0.00
T12	50 - 40	Leg	Max Tension	4	218.94	-1.80	-0.01
			Max. Compression	6	-245.71	1.14	0.00
			Max. Mx	10	-244.50	1.87	0.01
			Max. My	3	-11.10	0.01	-1.89
			Max. Vy	23	0.19	1.08	-0.00
			Max. Vx	9	0.19	0.00	1.89
		Diagonal	Max Tension	13	8.59	0.00	0.00
			Max. Compression	13	-8.69	0.00	0.00
			Max. Mx	17	2.13	0.15	0.02
			Max. My	26	-2.31	0.13	-0.02
			Max. Vy	17	0.07	0.15	0.02
			Max. Vx	26	0.00	0.00	0.00
T13	40 - 20	Leg	Max Tension	4	243.98	-1.35	-0.01
			Max. Compression	6	-274.92	1.55	0.01
			Max. Mx	25	43.06	-3.49	-0.00
			Max. My	3	-12.34	-0.05	-1.89
			Max. Vy	25	0.52	-3.49	-0.00
			Max. Vx	3	-0.21	-0.05	-1.89
		Diagonal	Max Tension	13	8.89	0.00	0.00
			Max. Compression	13	-9.04	0.00	0.00
			Max. Mx	17	1.26	0.17	-0.02
			Max. My	15	2.93	0.15	-0.02
			Max. Vy	17	0.07	0.15	0.02
			Max. Vx	15	0.00	0.00	0.00
T14	20 - 10	Leg	Max Tension	4	256.54	-1.43	-0.01
			Max. Compression	6	-289.97	1.36	0.00
			Max. Mx	19	-107.31	4.65	-0.01
			Max. My	5	-13.15	-0.10	2.61
			Max. Vy	25	-0.77	-3.49	-0.00
			Max. Vx	3	0.28	-0.10	-2.61
		Diagonal	Max Tension	13	9.08	0.00	0.00
			Max. Compression	13	-9.01	0.00	0.00
			Max. Mx	17	0.02	0.24	-0.02
			Max. My	20	-4.41	0.22	0.02
			Max. Vy	17	0.08	0.24	-0.02
			Max. Vx	20	-0.00	0.00	0.00
T15	10 - 0	Leg	Max Tension	4	267.85	-1.51	-0.01
			Max. Compression	6	-303.30	0.00	0.00
			Max. Mx	19	-115.09	4.65	-0.01
			Max. My	5	-13.45	-0.10	2.61
			Max. Vy	19	0.47	4.65	-0.01
			Max. Vx	5	0.36	-0.10	2.61
		Diagonal	Max Tension	13	9.39	0.00	0.00
			Max. Compression	13	-9.59	0.00	0.00
			Max. Mx	6	7.50	0.17	0.02
			Max. My	16	4.99	0.13	-0.03
			Max. Vy	18	0.08	0.14	0.03
			Max. Vx	16	0.00	0.00	0.00

Maximum Reactions

Location	Condition	Gov. Load Comb.	Vertical K	Horizontal, X K	Horizontal, Z K
Leg C	Max. Vert	10	309.11	27.77	-15.98
	Max. H_x	10	309.11	27.77	-15.98
	Max. H_z	4	-273.60	-24.77	14.26
	Min. Vert	4	-273.60	-24.77	14.26
	Min. H_x	4	-273.60	-24.77	14.26
	Min. H_z	10	309.11	27.77	-15.98
Leg B	Max. Vert	6	310.25	-27.71	-16.13
	Max. H_x	12	-272.46	24.69	14.36
	Max. H_z	12	-272.46	24.69	14.36
	Min. Vert	12	-272.46	24.69	14.36
	Min. H_x	6	310.25	-27.71	-16.13
	Min. H_z	6	310.25	-27.71	-16.13
Leg A	Max. Vert	2	309.03	0.16	31.99
	Max. H_x	11	14.10	3.17	1.15
	Max. H_z	2	309.03	0.16	31.99
	Min. Vert	8	-272.82	-0.13	-28.56
	Min. H_x	5	14.10	-3.14	1.15
	Min. H_z	8	-272.82	-0.13	-28.56

Tower Mast Reaction Summary

Load Combination	Vertical K	$Shear_x$ K	$Shear_z$ K	Overturning Moment, M_x kip-ft	Overturning Moment, M_z kip-ft	Torque kip-ft
Dead Only	42.31	0.00	0.00	0.13	-13.13	0.00
Dead+Wind 0 deg - No Ice	42.31	0.00	-51.17	-5874.61	-13.13	6.06
Dead+Wind 30 deg - No Ice	42.31	24.87	-42.99	-4979.57	-2896.19	4.17
Dead+Wind 60 deg - No Ice	42.31	42.62	-24.57	-2854.47	-4969.17	1.58
Dead+Wind 90 deg - No Ice	42.31	49.71	-0.00	0.02	-5775.26	-1.32
Dead+Wind 120 deg - No Ice	42.31	44.36	25.68	2947.73	-5109.47	-4.10
Dead+Wind 150 deg - No Ice	42.31	24.84	43.06	4986.96	-2892.34	-5.49
Dead+Wind 180 deg - No Ice	42.31	0.00	49.19	5715.13	-13.13	-5.66
Dead+Wind 210 deg - No Ice	42.31	-24.84	43.06	4986.96	2866.07	-4.48
Dead+Wind 240 deg - No Ice	42.31	-44.36	25.68	2947.73	5083.20	-1.95
Dead+Wind 270 deg - No Ice	42.31	-49.71	-0.00	0.02	5748.99	1.32
Dead+Wind 300 deg - No Ice	42.31	-42.62	-24.57	-2854.47	4942.90	4.08
Dead+Wind 330 deg - No Ice	42.31	-24.87	-42.99	-4979.57	2869.92	5.80
Dead+Ice+Temp	85.81	0.00	0.00	-2.79	-32.17	-0.00
Dead+Wind 0 deg+Ice+Temp	85.81	0.00	-14.87	-1713.38	-32.17	2.40
Dead+Wind 30 deg+Ice+Temp	85.81	6.93	-11.98	-1397.98	-839.27	1.49
Dead+Wind 60 deg+Ice+Temp	85.81	11.70	-6.74	-791.78	-1401.01	0.41
Dead+Wind 90 deg+Ice+Temp	85.81	13.85	-0.00	-2.81	-1645.48	-0.71
Dead+Wind 120 deg+Ice+Temp	85.81	12.88	7.46	854.80	-1515.16	-1.82
Dead+Wind 150 deg+Ice+Temp	85.81	6.92	11.99	1394.00	-838.41	-2.20
Dead+Wind 180 deg+Ice+Temp	85.81	0.00	13.50	1576.50	-32.17	-2.09
Dead+Wind 210 deg+Ice+Temp	85.81	-6.92	11.99	1394.00	774.07	-1.56
Dead+Wind 240 deg+Ice+Temp	85.81	-12.88	7.46	854.80	1450.82	-0.57
Dead+Wind 270 deg+Ice+Temp	85.81	-13.85	-0.00	-2.81	1581.13	0.71
Dead+Wind 300 deg+Ice+Temp	85.81	-11.70	-6.74	-791.78	1336.67	1.68
Dead+Wind 330 deg+Ice+Temp	85.81	-6.93	-11.98	-1397.98	774.93	2.27
Dead+Wind 0 deg - Service	42.31	0.00	-17.70	-2032.65	-13.13	2.10
Dead+Wind 30 deg - Service	42.31	8.61	-14.87	-1722.95	-1010.73	1.44
Dead+Wind 60 deg - Service	42.31	14.75	-8.50	-987.62	-1728.02	0.55
Dead+Wind 90 deg - Service	42.31	17.20	-0.00	0.09	-2006.95	-0.46
Dead+Wind 120 deg - Service	42.31	15.35	8.89	1020.06	-1776.57	-1.42
Dead+Wind 150 deg - Service	42.31	8.59	14.90	1725.68	-1009.40	-1.90
Dead+Wind 180 deg - Service	42.31	0.00	17.02	1977.64	-13.13	-1.96

Load Combination	Vertical K	$Shear_x$ K	$Shear_z$ K	Overturning Moment, M_x kip-ft	Overturning Moment, M_z kip-ft	Torque kip-ft
Dead+Wind 210 deg - Service	42.31	-8.59	14.90	1725.68	983.13	-1.55
Dead+Wind 240 deg - Service	42.31	-15.35	8.89	1020.06	1750.30	-0.68
Dead+Wind 270 deg - Service	42.31	-17.20	-0.00	0.09	1980.68	0.46
Dead+Wind 300 deg - Service	42.31	-14.75	-8.50	-987.62	1701.76	1.41
Dead+Wind 330 deg - Service	42.31	-8.61	-14.87	-1722.95	984.46	2.01

Solution Summary

	Sum of Applied Forces			Sum of Reactions			
Load Comb.	PX K	PY K	PZ K	PX K	PY K	PZ K	% Error
1	0.00	-42.31	0.00	0.00	42.31	0.00	0.000%
2	0.00	-42.31	-51.17	0.00	42.31	51.17	0.000%
3	24.87	-42.31	-42.99	-24.87	42.31	42.99	0.000%
4	42.62	-42.31	-24.57	-42.62	42.31	24.57	0.000%
5	49.71	-42.31	-0.00	-49.71	42.31	0.00	0.000%
6	44.36	-42.31	25.68	-44.36	42.31	-25.68	0.000%
7	24.84	-42.31	43.06	-24.84	42.31	-43.06	0.000%
8	0.00	-42.31	49.19	0.00	42.31	-49.19	0.000%
9	-24.84	-42.31	43.06	24.84	42.31	-43.06	0.000%
10	-44.36	-42.31	25.68	44.36	42.31	-25.68	0.000%
11	-49.71	-42.31	-0.00	49.71	42.31	0.00	0.000%
12	-42.62	-42.31	-24.57	42.62	42.31	24.57	0.000%
13	-24.87	-42.31	-42.99	24.87	42.31	42.99	0.000%
14	0.00	-85.81	0.00	0.00	85.81	0.00	0.000%
15	0.00	-85.81	-14.87	0.00	85.81	14.87	0.000%
16	6.93	-85.81	-11.98	-6.93	85.81	11.98	0.000%
17	11.70	-85.81	-6.74	-11.70	85.81	6.74	0.000%
18	13.85	-85.81	-0.00	-13.85	85.81	0.00	0.000%
19	12.88	-85.81	7.46	-12.88	85.81	-7.46	0.000%
20	6.92	-85.81	11.99	-6.92	85.81	-11.99	0.000%
21	0.00	-85.81	13.50	0.00	85.81	-13.50	0.000%
22	-6.92	-85.81	11.99	6.92	85.81	-11.99	0.000%
23	-12.88	-85.81	7.46	12.88	85.81	-7.46	0.000%
24	-13.85	-85.81	-0.00	13.85	85.81	0.00	0.000%
25	-11.70	-85.81	-6.74	11.70	85.81	6.74	0.000%
26	-6.93	-85.81	-11.98	6.93	85.81	11.98	0.000%
27	0.00	-42.31	-17.70	0.00	42.31	17.70	0.000%
28	8.61	-42.31	-14.87	-8.61	42.31	14.87	0.000%
29	14.75	-42.31	-8.50	-14.75	42.31	8.50	0.000%
30	17.20	-42.31	-0.00	-17.20	42.31	0.00	0.000%
31	15.35	-42.31	8.89	-15.35	42.31	-8.89	0.000%
32	8.59	-42.31	14.90	-8.59	42.31	-14.90	0.000%
33	0.00	-42.31	17.02	-0.00	42.31	-17.02	0.000%
34	-8.59	-42.31	14.90	8.59	42.31	-14.90	0.000%
35	-15.35	-42.31	8.89	15.35	42.31	-8.89	0.000%
36	-17.20	-42.31	-0.00	17.20	42.31	0.00	0.000%
37	-14.75	-42.31	-8.50	14.75	42.31	8.50	0.000%
38	-8.61	-42.31	-14.87	8.61	42.31	14.87	0.000%

Maximum Tower Deflections - Service Wind

Section No.	Elevation ft	Horz. Deflection in	Gov. Load Comb.	Tilt °	Twist °
T1	195 - 180	7.754	31	0.3760	0.0132
T2	180 - 160	6.576	31	0.3631	0.0114
T3	160 - 140	5.095	31	0.3257	0.0055
T4	140 - 120	3.783	31	0.2715	0.0021
T5	120 - 113.333	2.704	31	0.2200	0.0017
T6	113.333 - 106.667	2.391	31	0.2064	0.0018
T7	106.667 - 100	2.097	31	0.1924	0.0019
T8	100 - 80	1.825	31	0.1778	0.0020
T9	80 - 70	1.136	31	0.1281	0.0017
T10	70 - 60	0.868	31	0.1111	0.0015
T11	60 - 50	0.641	31	0.0938	0.0014
T12	50 - 40	0.446	31	0.0763	0.0012
T13	40 - 20	0.291	31	0.0586	0.0010
T14	20 - 10	0.084	31	0.0232	0.0005
T15	10 - 0	0.028	35	0.0116	0.0003

Critical Deflections and Radius of Curvature - Service Wind

Elevation ft	Appurtenance	Gov. Load Comb.	Deflection in	Tilt °	Twist °	Radius of Curvature ft
195.00	Lightning Rod	31	7.754	0.3760	0.0132	125791
192.00	AIR 21 B2A/B4P w/ Mount Pipe	31	7.517	0.3739	0.0130	125791
178.50	APXVTM14-C-I20 w/Mount Pipe	31	6.460	0.3612	0.0111	41174
178.00	PD1151	31	6.422	0.3605	0.0110	40564
175.00	1900 MHz RRU	31	6.193	0.3561	0.0102	37953
161.00	(2) LPA-80063/4CF w/ Mount Pipe	31	5.166	0.3281	0.0058	29784
150.50	DC6-48-60-18-8F	31	4.445	0.3010	0.0034	22882
150.00	(3) AM-X-CD-14-65-00T w/ Mount Pipe	31	4.412	0.2996	0.0033	22614
138.00	Sinclair SD312HL	31	3.664	0.2659	0.0020	18872
102.00	RDH4518A	31	1.904	0.1824	0.0020	24771
101.00	Pipe Mount	31	1.864	0.1801	0.0020	25652

Maximum Tower Deflections - Design Wind

Section No.	Elevation ft	Horz. Deflection in	Gov. Load Comb.	Tilt °	Twist °
T1	195 - 180	22.358	6	1.0859	0.0381
T2	180 - 160	18.954	6	1.0481	0.0330
T3	160 - 140	14.681	6	0.9392	0.0160
T4	140 - 120	10.897	6	0.7823	0.0061
T5	120 - 113.333	7.791	6	0.6336	0.0049
T6	113.333 - 106.667	6.889	6	0.5944	0.0052
T7	106.667 - 100	6.040	6	0.5540	0.0056
T8	100 - 80	5.257	6	0.5119	0.0057
T9	80 - 70	3.273	6	0.3688	0.0049
T10	70 - 60	2.500	6	0.3199	0.0044
T11	60 - 50	1.848	6	0.2699	0.0040
T12	50 - 40	1.285	6	0.2197	0.0035
T13	40 - 20	0.838	6	0.1688	0.0029

Section No.	Elevation ft	Horz. Deflection in	Gov. Load Comb.	Tilt °	Twist °
T14	20 - 10	0.241	6	0.0668	0.0015
T15	10 - 0	0.081	10	0.0333	0.0007

Critical Deflections and Radius of Curvature - Design Wind

Elevation ft	Appurtenance	Gov. Load Comb.	Deflection in	Tilt °	Twist °	Radius of Curvature ft
195.00	Lightning Rod	6	22.358	1.0859	0.0381	44109
192.00	AIR 21 B2A/B4P w/ Mount Pipe	6	21.671	1.0799	0.0375	44109
178.50	APXVTM14-C-I20 w/Mount Pipe	6	18.620	1.0424	0.0320	14423
178.00	PD1151	6	18.510	1.0405	0.0317	14206
175.00	1900 MHz RRU	6	17.850	1.0276	0.0294	13273
161.00	(2) LPA-80063/4CF w/ Mount Pipe	6	14.884	0.9462	0.0168	10360
150.50	DC6-48-60-18-8F	6	12.807	0.8676	0.0098	7932
150.00	(3) AM-X-CD-14-65-00T w/ Mount Pipe	6	12.712	0.8636	0.0096	7838
138.00	Sinclair SD312HL	6	10.556	0.7660	0.0056	6535
102.00	RDH4518A	6	5.485	0.5251	0.0057	8599
101.00	Pipe Mount	6	5.371	0.5186	0.0057	8907

Bolt Design Data

Section No.	Elevation ft	Component Type	Bolt Grade	Bolt Size in	Number Of Bolts	Maximum Load per Bolt K	Allowable Load K	Ratio Load / Allowable	Allowable Ratio	Criteria
T1	195	Diagonal	A325X	0.6250	1	1.84	4.89	0.375 ✔	1.333	Member Block Shear
		Top Girt	A325X	0.6250	1	0.27	4.89	0.056 ✔	1.333	Member Block Shear
T2	180	Diagonal	A325X	0.6250	1	3.66	4.89	0.749 ✔	1.333	Member Block Shear
		Top Girt	A325X	0.6250	1	0.25	4.89	0.051 ✔	1.333	Member Block Shear
T3	160	Diagonal	A325X	0.6250	1	6.40	5.57	1.148 ✔	1.333	Member Block Shear
T4	140	Diagonal	A325X	0.6250	1	6.72	6.80	0.989 ✔	1.333	Member Bearing
T5	120	Diagonal	A325X	0.6250	1	6.59	6.80	0.970 ✔	1.333	Member Bearing
T6	113.333	Diagonal	A325X	0.6250	1	6.57	6.80	0.966 ✔	1.333	Member Bearing
T7	106.667	Diagonal	A325X	0.6250	1	6.71	9.06	0.740 ✔	1.333	Member Bearing
T8	100	Diagonal	A325X	0.7500	1	7.03	6.80	1.034 ✔	1.333	Member Bearing
T9	80	Diagonal	A325X	0.7500	1	7.90	9.06	0.871 ✔	1.333	Member Bearing
T10	70	Diagonal	A325X	0.7500	1	8.19	13.25	0.618 ✔	1.333	Bolt Shear
T11	60	Diagonal	A325X	0.7500	1	8.17	9.06	0.901 ✔	1.333	Member Bearing
T12	50	Diagonal	A325X	0.7500	1	8.69	13.25	0.656 ✔	1.333	Bolt Shear
T13	40	Diagonal	A325X	0.7500	1	8.89	9.06	0.981 ✔	1.333	Member Bearing

Section No.	Elevation ft	Component Type	Bolt Grade	Bolt Size in	Number Of Bolts	Maximum Load per Bolt K	Allowable Load K	Ratio Load / Allowable	Allowable Ratio	Criteria
T14	20	Leg	A572-50	1.5000	8	32.07	37.91	0.846 ✔	1.333	Bolt Tension
		Diagonal	A325X	0.7500	1	9.08	9.06	1.002 ✔	1.333	Member Bearing
T15	10	Leg	A572-50	1.5000	8	33.48	37.91	0.883 ✔	1.333	Bolt Tension
		Diagonal	A325X	0.7500	1	9.39	9.06	1.036 ✔	1.333	Member Bearing

Compression Checks

Leg Design Data (Compression)

Section No.	Elevation ft	Size	L ft	L_u ft	Kl/r	F_a ksi	A in^2	Actual P K	Allow. P_a K	Ratio P / P_a
T1	195 - 180	P2x.154 (2.38 OD)	15.00	5.00	76.2 K=1.00	19.756	1.0745	-8.92	21.23	0.420 ✔
T2	180 - 160	P3x.216 (3.5 OD)	20.03	5.01	51.7 K=1.00	24.091	2.2285	-37.12	53.69	0.691 ✔
T3	160 - 140	P3x.300 (3.50 OD)	20.03	5.01	52.9 K=1.00	23.894	3.0159	-79.76	72.06	1.107 ✔
T4	140 - 120	P4x.337 (4.50 OD)	20.03	6.68	54.3 K=1.00	23.672	4.4074	-118.08	104.33	1.132 ✔
T5	120 - 113.333	P5x.375 (5.5625 OD)	6.68	6.68	43.6 K=1.00	25.320	6.1114	-130.49	154.74	0.843 ✔
T6	113.333 - 106.667	P5x.375 (5.5625 OD)	6.68	6.68	43.6 K=1.00	25.320	6.1114	-142.12	154.74	0.918 ✔
T7	106.667 - 100	P5x.375 (5.5625 OD)	6.68	6.68	43.6 K=1.00	25.320	6.1114	-153.65	154.74	0.993 ✔
T8	100 - 80	P6x.28 (6.625 OD)	20.03	6.68	35.7 K=1.00	26.422	5.5813	-186.63	147.47	1.266 ✔
T9	80 - 70	P6x.432 (6.625 OD)	10.02	10.02	54.8 K=1.00	23.591	8.4049	-199.62	198.28	1.007 ✔
T10	70 - 60	P6x.432 (6.625 OD)	10.02	10.02	54.8 K=1.00	23.591	8.4049	-215.60	198.28	1.087 ✔
T11	60 - 50	P8x.322 (8.625 OD)	10.02	10.02	40.9 K=1.00	25.703	8.3993	-230.76	215.89	1.069 ✔
T12	50 - 40	P8x.322 (8.625 OD)	10.02	10.02	40.9 K=1.00	25.703	8.3993	-245.71	215.89	1.138 ✔
T13	40 - 20	P8x.322 (8.625 OD)	20.03	10.02	40.9 K=1.00	25.703	8.3993	-274.92	215.89	1.273 ✔
T14	20 - 10	P8x.5 (8.625 OD)	10.02	10.02	41.8 K=1.00	25.582	12.7627	-289.97	326.50	0.888 ✔
T15	10 - 0	P8x.5 (8.625 OD)	10.02	10.02	41.8 K=1.00	25.582	12.7627	-303.30	326.50	0.929 ✔

Diagonal Design Data (Compression)

Section No.	Elevation ft	Size	L ft	L_u ft	Kl/r	F_a ksi	A in^2	Actual P K	Allow. P_a K	Ratio $\frac{P}{P_a}$
T1	195 - 180	L1 3/4x1 3/4x3/16	7.07	3.25	115.2 K=1.01	10.966	0.6211	-1.90	6.81	0.279 ✔
T2	180 - 160	L1 3/4x1 3/4x3/16	8.40	4.03	140.8 K=1.00	7.536	0.6211	-3.73	4.68	0.798 ✔
T3	160 - 140	L2x2x3/16	10.08	4.87	148.3 K=1.00	6.789	0.7150	-6.25	4.85	1.288 ✔
T4	140 - 120	L2 1/2x2 1/2x3/16	12.58	6.12	148.4 K=1.00	6.785	0.9020	-6.63	6.12	1.084 ✔
T5	120 - 113.333	L2 1/2x2 1/2x3/16	13.15	6.35	154.0 K=1.00	6.294	0.9020	-6.58	5.68	1.160 ✔
T6	113.333 - 106.667	L2 1/2x2 1/2x3/16	13.73	6.64	161.1 K=1.00	5.756	0.9020	-6.61	5.19	1.273 ✔
T7	106.667 - 100	L2 1/2x2 1/2x1/4	14.32	6.94	169.6 K=1.00	5.193	1.1900	-6.72	6.18	1.087 ✔
T8	100 - 80	L3x3x3/16	16.11	7.79	156.8 K=1.00	6.070	1.0900	-7.01	6.62	1.059 ✔
T9	80 - 70	L3x3x1/4	18.45	9.05	183.4 K=1.00	4.440	1.4400	-7.99	6.39	1.250 ✔
T10	70 - 60	L3x3x3/8	19.30	9.47	193.6 K=1.00	3.983	2.1100	-8.19	8.40	0.974 ✔
T11	60 - 50	L3x3 1/2x1/4	20.16	9.81	186.5 K=1.00	4.293	1.5600	-8.19	6.70	1.222 ✔
T12	50 - 40	L3x3x3/8	21.03	10.25	209.5 K=1.00	3.404	2.1100	-8.69	7.18	1.210 ✔
T13	40 - 20	KL/R > 200 (C) - 184 L3 1/2x3 1/2x1/4	22.81	11.14	192.6 K=1.00	4.026	1.6900	-9.04	6.80	1.329 ✔
T14	20 - 10	L3 1/2x4x1/4	23.71	11.59	189.5 K=1.00	4.159	1.8100	-9.01	7.53	1.196 ✔
T15	10 - 0	L4x4x1/4	24.62	12.05	181.8 K=1.00	4.517	1.9400	-9.59	8.76	1.095 ✔

Top Girt Design Data (Compression)

Section No.	Elevation ft	Size	L ft	L_u ft	Kl/r	F_a ksi	A in^2	Actual P K	Allow. P_a K	Ratio $\frac{P}{P_a}$
T1	195 - 180	L1 3/4x1 3/4x3/16	5.00	4.51	157.6 K=1.00	6.013	0.6211	-0.25	3.73	0.066 ✔
T2	180 - 160	L1 3/4x1 3/4x3/16	5.00	4.51	157.6 K=1.00	6.013	0.6211	-0.24	3.73	0.065 ✔

Tension Checks

Leg Design Data (Tension)

Section No.	Elevation ft	Size	L ft	L_u ft	Kl/r	F_a ksi	A in^2	Actual P K	Allow. P_a K	Ratio $\frac{P}{P_a}$
T1	195 - 180	P2x.154 (2.38 OD)	15.00	5.00	76.2	30.000	1.0745	7.04	32.24	0.218 ✔
T2	180 - 160	P3x.216 (3.5 OD)	20.03	5.01	51.7	30.000	2.2285	30.30	66.85	0.453 ✔
T3	160 - 140	P3x.300 (3.50 OD)	20.03	5.01	52.9	30.000	3.0159	69.22	90.48	0.765 ✔
T4	140 - 120	P4x.337 (4.50 OD)	20.03	6.68	54.3	30.000	4.4074	105.07	132.22	0.795 ✔
T5	120 - 113.333	P5x.375 (5.5625 OD)	6.68	6.68	43.6	30.000	6.1114	116.50	183.34	0.635 ✔
T6	113.333 - 106.667	P5x.375 (5.5625 OD)	6.68	6.68	43.6	30.000	6.1114	127.20	183.34	0.694 ✔
T7	106.667 - 100	P5x.375 (5.5625 OD)	6.68	6.68	43.6	30.000	6.1114	137.67	183.34	0.751 ✔
T8	100 - 80	P6x.28 (6.625 OD)	20.03	6.68	35.7	30.000	5.5813	167.35	167.44	0.999 ✔
T9	80 - 70	P6x.432 (6.625 OD)	10.02	10.02	54.8	30.000	8.4049	178.94	252.15	0.710 ✔
T10	70 - 60	P6x.432 (6.625 OD)	10.02	10.02	54.8	30.000	8.4049	192.84	252.15	0.765 ✔
T11	60 - 50	P8x.322 (8.625 OD)	10.02	10.02	40.9	30.000	8.3993	205.97	251.98	0.817 ✔
T12	50 - 40	P8x.322 (8.625 OD)	10.02	10.02	40.9	30.000	8.3993	218.94	251.98	0.869 ✔
T13	40 - 20	P8x.322 (8.625 OD)	20.03	10.02	40.9	30.000	8.3993	243.98	251.98	0.968 ✔
T14	20 - 10	P8x.5 (8.625 OD)	10.02	10.02	41.8	30.000	12.7627	256.54	382.88	0.670 ✔
T15	10 - 0	P8x.5 (8.625 OD)	10.02	10.02	41.8	30.000	12.7627	267.85	382.88	0.700 ✔

Diagonal Design Data (Tension)

Section No.	Elevation ft	Size	L ft	L_u ft	Kl/r	F_a ksi	A in^2	Actual P K	Allow. P_a K	Ratio $\frac{P}{P_a}$
T1	195 - 180	L1 3/4x1 3/4x3/16	7.07	3.25	75.9	29.000	0.3604	1.84	10.45	0.176 ✔
T2	180 - 160	L1 3/4x1 3/4x3/16	8.40	4.03	93.3	29.000	0.3604	3.66	10.45	0.351 ✔
T3	160 - 140	L2x2x3/16	9.65	4.66	93.4	29.000	0.4308	6.40	12.49	0.512 ✔
T4	140 - 120	L2 1/2x2 1/2x3/16	11.47	5.57	88.2	29.000	0.5710	6.72	16.56	0.406 ✔
T5	120 - 113.333	L2 1/2x2 1/2x3/16	13.15	6.35	100.3	29.000	0.5710	6.59	16.56	0.398 ✔

Section No.	Elevation ft	Size	L ft	L_u ft	Kl/r	F_a ksi	A in^2	Actual P K	Allow. P_a K	Ratio $\frac{P}{P_a}$
T6	113.333 - 106.667	L2 1/2x2 1/2x3/16	13.73	6.64	104.7	29.000	0.5710	6.57	16.56	0.397 ✔
T7	106.667 - 100	L2 1/2x2 1/2x1/4	14.32	6.94	110.5	29.000	0.7519	6.71	21.80	0.308 ✔
T8	100 - 80	L3x3x3/16	16.11	7.79	101.4	29.000	0.6945	7.03	20.14	0.349 ✔
T9	80 - 70	L3x3x1/4	18.45	9.05	118.6	29.000	0.9159	7.90	26.56	0.297 ✔
T10	70 - 60	L3x3x3/8	19.30	9.47	126.4	29.000	1.3364	8.16	38.76	0.210 ✔
T11	60 - 50	L3x3 1/2x1/4	20.16	9.81	130.8	29.000	1.0059	8.17	29.17	0.280 ✔
T12	50 - 40	L3x3x3/8	21.03	10.25	136.6	29.000	1.3364	8.59	38.76	0.222 ✔
T13	40 - 20	L3 1/2x3 1/2x1/4	22.81	11.14	124.2	29.000	1.1034	8.89	32.00	0.278 ✔
T14	20 - 10	L3 1/2x4x1/4	23.71	11.59	131.1	29.000	1.1934	9.08	34.61	0.262 ✔
T15	10 - 0	L4x4x1/4	24.62	12.05	117.0	29.000	1.2909	9.39	37.44	0.251 ✔

Top Girt Design Data (Tension)

Section No.	Elevation ft	Size	L ft	L_u ft	Kl/r	F_a ksi	A in^2	Actual P K	Allow. P_a K	Ratio $\frac{P}{P_a}$
T1	195 - 180	L1 3/4x1 3/4x3/16	5.00	4.51	107.3	29.000	0.3604	0.27	10.45	0.026 ✔
T2	180 - 160	L1 3/4x1 3/4x3/16	5.00	4.51	107.3	29.000	0.3604	0.25	10.45	0.024 ✔

Section Capacity Table

Section No.	Elevation ft	Component Type	Size	Critical Element	P K	$SF*P_{allow}$ K	% Capacity	Pass Fail
T1	195 - 180	Leg	P2x.154 (2.38 OD)	1	-8.92	28.30	31.5	Pass
T2	180 - 160	Leg	P3x.216 (3.5 OD)	25	-37.12	71.56	51.9	Pass
T3	160 - 140	Leg	P3x.300 (3.50 OD)	56	-79.76	96.06	83.0	Pass
T4	140 - 120	Leg	P4x.337 (4.50 OD)	83	-118.08	139.08	84.9	Pass
T5	120 - 113.333	Leg	P5x.375 (5.5625 OD)	104	-130.49	206.27	63.3	Pass
T6	113.333 - 106.667	Leg	P5x.375 (5.5625 OD)	113	-142.12	206.27	68.9	Pass
T7	106.667 - 100	Leg	P5x.375 (5.5625 OD)	122	-153.65	206.27	74.5	Pass
T8	100 - 80	Leg	P6x.28 (6.625 OD)	131	-186.63	196.58	94.9	Pass
T9	80 - 70	Leg	P6x.432 (6.625 OD)	152	-199.62	264.31	75.5	Pass
T10	70 - 60	Leg	P6x.432 (6.625 OD)	161	-215.60	264.31	81.6	Pass
T11	60 - 50	Leg	P8x.322 (8.625 OD)	170	-230.76	287.78	80.2	Pass
T12	50 - 40	Leg	P8x.322 (8.625 OD)	179	-245.71	287.78	85.4	Pass
T13	40 - 20	Leg	P8x.322 (8.625 OD)	188	-274.92	287.78	95.5	Pass

Section No.	Elevation ft	Component Type	Size	Critical Element	P K	SF*P_{allow} K	% Capacity	Pass Fail
T14	20 - 10	Leg	P8x.5 (8.625 OD)	203	-289.97	435.22	66.6	Pass
T15	10 - 0	Leg	P8x.5 (8.625 OD)	212	-303.30	435.22	69.7	Pass
T1	195 - 180	Diagonal	L1 3/4x1 3/4x3/16	11	-1.90	9.08	21.0 28.1 (b)	Pass
T2	180 - 160	Diagonal	L1 3/4x1 3/4x3/16	35	-3.73	6.24	59.9	Pass
T3	160 - 140	Diagonal	L2x2x3/16	62	-6.25	6.47	96.7	Pass
T4	140 - 120	Diagonal	L2 1/2x2 1/2x3/16	90	-6.63	8.16	81.3	Pass
T5	120 - 113.333	Diagonal	L2 1/2x2 1/2x3/16	111	-6.58	7.57	87.0	Pass
T6	113.333 - 106.667	Diagonal	L2 1/2x2 1/2x3/16	120	-6.61	6.92	95.5	Pass
T7	106.667 - 100	Diagonal	L2 1/2x2 1/2x1/4	129	-6.72	8.24	81.5	Pass
T8	100 - 80	Diagonal	L3x3x3/16	136	-7.01	8.82	79.4	Pass
T9	80 - 70	Diagonal	L3x3x1/4	157	-7.99	8.52	93.8	Pass
T10	70 - 60	Diagonal	L3x3x3/8	166	-8.19	11.20	73.1	Pass
T11	60 - 50	Diagonal	L3x3 1/2x1/4	175	-8.19	8.93	91.7	Pass
T12	50 - 40	Diagonal	L3x3x3/8	184	-8.69	9.57	90.8	Pass
T13	40 - 20	Diagonal	L3 1/2x3 1/2x1/4	193	-9.04	9.07	99.7	Pass
T14	20 - 10	Diagonal	L3 1/2x4x1/4	208	-9.01	10.03	89.8	Pass
T15	10 - 0	Diagonal	L4x4x1/4	217	-9.59	11.68	82.1	Pass
T1	195 - 180	Top Girt	L1 3/4x1 3/4x3/16	5	-0.25	4.98	4.9	Pass
T2	180 - 160	Top Girt	L1 3/4x1 3/4x3/16	29	-0.24	4.98	4.9	Pass
						Summary		
						Leg (T13)	95.5	Pass
						Diagonal (T13)	99.7	Pass
						Top Girt (T1)	4.9	Pass
						Bolt Checks	86.1	Pass
						RATING =	**99.7**	**Pass**

Moment Capacity of Drilled Concrete Shaft (Caisson) for TIA Rev F or G

Note: Shaft assumed to have ties, not spiral, transverse reinforcing

Site Data

BU#:	
Site Name:	
App #:	

Loads Already Factored		
For M (WL)	1.3	<----Disregard
For P (DL)	1.3	<----Disregard

Pier Properties

Concrete:

Pier Diameter =	6.0	ft
Concrete Area =	4071.5	in^2

Reinforcement:

Clear Cover to **Tie**=	3.00	in
Horiz. **Tie** Bar Size=	4	
Vert. Cage Diameter =	5.33	ft
Vert. Cage Diameter =	64.00	in
Vertical Bar Size =	8	
Bar Diameter =	1.00	in
Bar Area =	0.79	in^2
Number of Bars =	28	
As Total=	22.12	in^2
A s/ Aconc, Rho:	0.0054	0.54%

ACI 10.5 , ACI 21.10.4, and IBC 1810.

Min As for Flexural, Tension Controlled, Shafts:

(3)*(Sqrt(f'c)/Fy:	0.0027
200 / Fy:	0.0033

Minimum Rho Check:

Actual Req'd Min. Rho:	0.33%	Flexural
Provided Rho:	0.54%	**OK**

Ref. Shaft Max Axial Capacities, ϕ Max(Pn or Tn):		
Max Pu = (φ=0.65) Pn.		
Pn per ACI 318 (10-2)	6059.63	kips
at Mu=(ϕ=0.65)Mn=	3162.85	ft-kips
Max Tu, (φ=0.9) Tn =	1194.48	kips
at Mu=ϕ=(0.90)Mn=	0.00	ft-kips

Maximum Shaft Superimposed Forces

TIA Revision:	G	
Max. Factored Shaft Mu:	575.6	ft-kips **(* Note)**
Max. Factored Shaft Pu:	274	kips
Max Axial Force Type:	Tension	

(*) Note: Max Shaft Superimposed Moment does not necessarily equal to the shaft top reaction moment

Load Factor	**Shaft Factored Loads**		
1.00	Mu:	575.6	ft-kips
1.00	Pu:	274	kips

Material Properties

Concrete Comp. strength, f'c =	3000	psi
Reinforcement yield strength, Fy =	60	ksi
Reinforcing Modulus of Elasticity, E =	29000	ksi
Reinforcement yield strain =	0.00207	
Limiting compressive strain =	0.003	

ACI 318 Code

Select Analysis ACI Code=	2005

Seismic Properties

Seismic Design Category =	B
Seismic Risk =	**Low**

Solve (Run) <-- Press Upon Completing All Input

Results:

Governing Orientation Case: **2**

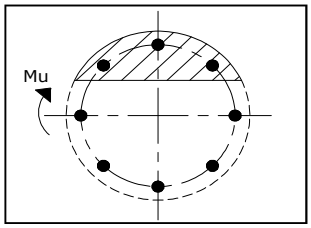

Case 1

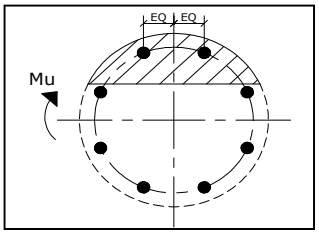

Case 2

Dist. From Edge to Neutral Axis:	**9.03**	in
Extreme Steel Strain, ϵt:	**0.0195**	
	ϵt > 0.0050, Tension Controlled	
Reduction Factor,φ:	**0.900**	

Output Note: Negative Pu=Tension

For Axial Compression, φ Pn = Pu:	-274.00	kips
Drilled Shaft Moment Capacity, φMn:	**2352.05**	ft-kips
Drilled Shaft Superimposed Mu:	**575.60**	ft-kips

(Mu/φMn, Drilled Shaft Flexure CSR:	**24.5%**

Self Support Tower Caisson Foundation Analysis

Code (F or G)	F

Reactions	
Uplift (Per Leg) (k)	274
Comp. (Per Leg) (k)	310

Legend	
	Input
	Output
	Input Error
	Notes

Caisson Properties	
Diameter (ft)	6.0
Overall Length (ft)	51.5
Height Above Grade (ft)	0.5
γ Unit Weight of Conc. (kcf)	0.150
Foundation Modified?	No

Soil Properties	
Type of Soil Parameter Input	Caisson Capacities Per FDH Geo
Frost Depth (ft)	3.33
Water Table Level (ft)	5
Number of Soil Layers Below Grade	0
Ult. Tip Bearing Pressure (ksf)	12.55
Net or Gross Bearing?	Net

Normal Soils Inputs
Normal Soils
Determine Per County
100
0
8 ksf (F)/7ksf (G)
Net

FDH Geo Inputs
Caisson Capacities Per FDH Geo
Determine Per County
Per FDH Geo
0
Per FDH Geo
Net

FDH Geo Skin Friction Resistance	
Ult. Uplift Resistance (k)	727.00
Ult. Comp. Skin Friction Resistance (k)	969.00
γ Recommended Unit Weight of Soil (kcf)	0.105

Soil Profile

Soil Layers	Clay or Sand (C or S)	Depth to Bottom of Soil Layer (ft)	Soil Unit Weight (pcf)	Friction Angle (Φ)	Cohesion (ksf)	Ult. Comp. Skin Friction (ksf)	Ult. Uplift Skin Friction (ksf)
Grade	---	0	0	0	0.00	0.00	0.00
Layer 1	S						
Layer 2	S						
Layer 3	S						
Layer 4	S						
Layer 5	S						
Layer 6	S						
Layer 7	S						
Layer 8	S						
Layer 9	S						
Layer 10	S						

Input Parameter Checks	
Last Soil Layer Depth @ Caisson Tip	OK
Moist Soil Unit Weights Used	OK
Only Φ/Cu Input or Skin Friction Input	OK

Uplift Resistance		
Weight of Conc. (k)	137.3	
Soil Type in Neglected Layer	S	
Top Soil Neglected (ft)	3.33	
Ult. Skin Friction Resistance (k)	727.0	
Ult. Modification Resistance (k)		
Total Allowable Uplift Resistance (k)	**473.3**	
Capacity (%)	**57.9%**	**Sufficient**

Compression Resistance		
Weight of Conc. (k)	65.5	
Soil Type Neglected at Top (C or S)	S	
Top Soil Neglected (ft)	3.33	
Soil Type Neglected at Bottom (C or S)	Do Not Neglect	
Bottom Soil Neglected (ft)	0	
Ult. Skin Friction Resistance (k)	969.0	
Ult. Tip Bearing Resistance (k)	354.8	
Ult. Modification Resistance (k)		
Total Allow. Compressive Resistance (k)	**661.9**	
Capacity (%)	**56.7%**	**Sufficient**

Notes

1. The depth of the last soil layer entered must be the depth at which the caisson is bearing.

2. The soil unit weight should be the moist unit weight and is a necessary input to account for net bearing. All buoyant unit weights will be accounted for as necessary.

3. If the water table falls in between soil layers, break the soil layer up into two layers.

4. If the geotechnical report provides a skin friction value for each soil layer, make sure the friction angle and cohesion inputs are zero.

```
*****************************************************************************************
*                                                                                       *
* CAISSON - Pier Foundations Analysis and Design -  Copyright Power Line Systems, Inc. 1993-2010 *
*                                                                                       *
*****************************************************************************************
```

Project Title: Clinton 4 CT, CT1879-S-02
Project Notes: 15BYPZ1400 (R1)

Calculation Method: Full 8CD

******* I N P U T D A T A

Pier Properties

Diameter (ft)	Distance of Top of Pier above Ground (ft)	Concrete Strength (ksi)	Steel Yield Strength (ksi)
6.00	0.50	3.00	60.00

Soil Properties

Layer	Type	Thickness (ft)	Depth at Top of Layer (ft)	Density (lbs/ft^3)	CU (psf)	KP	PHI (deg)
1	Clay	5.00	0.00	110.0			
2	Clay	5.00	5.00	47.6			
3	Sand	5.00	10.00	42.6		2.770	28.00
4	Sand	5.00	15.00	42.6		2.882	29.00
5	Sand	5.00	20.00	47.6		3.000	30.00
6	Sand	5.00	25.00	52.6		3.255	32.00
7	Sand	5.00	30.00	47.6		3.000	30.00
8	Sand	10.00	35.00	52.6		3.255	32.00
9	Sand	5.00	45.00	72.6		4.599	40.00
10	Sand	2.00	50.00	52.6		3.124	31.00

Design (Factored) Loads at Top of Pier

Moment (ft-k)	Axial Load (kips)	Shear Load (kips)	Additional Safety Factor Against Soil Failure
0.0	0.0	29.00	34.91

******* R E S U L T S

Calculated Pier Properties

Length (ft)	Weight (kips)	Pressure Due To Axial Load (psf)	Pressure Due To Weight (psf)	Total End-Bearing Pressure (psf)
51.500	218.419	0.0	7725.0	7725.0

Ultimate Resisting Forces Along Pier

Type	Distance of Top of Layer to Top of Pier (ft)	Thickness (ft)	Density (lbs/ft^3)	CU (psf)	KP	Force (kips)	Arm (ft)
Clay	0.50	5.00	110.0			0.00	3.00
Clay	5.50	5.00	47.6			0.00	8.00
Sand	10.50	5.00	42.6		2.770	223.00	13.10
Sand	15.50	5.00	42.6		2.882	287.26	18.08
Sand	20.50	5.00	47.6		3.000	359.91	23.07
Sand	25.50	5.00	52.6		3.255	463.89	28.07
Sand	30.50	5.00	47.6		3.000	495.18	33.05
Sand	35.50	6.97	52.6		3.255	872.05	39.08
Sand	42.47	3.03	52.6		3.255	-426.30	44.00
Sand	45.50	5.00	72.6		4.599	-1101.21	48.06
Sand	50.50	1.00	52.6		3.124	-161.29	51.00

Shear and Moments Along Pier

Distance below Top of Pier (ft)	Shear (with Safety Factor) (kips)	Moment (with Safety Factor) (ft-k)	Shear (without Safety Factor) (kips)	Moment (without Safety Factor) (ft-k)
0.00	1012.5	13.0	29.0	0.4

5.15	1012.5	5227.4	29.0	149.7
10.30	1012.5	10441.7	29.0	299.1
15.45	792.0	15131.8	22.7	433.5
20.60	495.7	18473.6	14.2	529.2
25.75	121.0	20094.8	3.5	575.6
30.90	-358.8	19509.8	-10.3	558.9
36.05	-880.1	16360.3	-25.2	468.6
41.20	-1519.0	10217.5	-43.5	292.7
46.35	-1085.9	2704.6	-31.1	77.5
51.50	-0.0	0.0	-0.0	0.0