STATE OF CONNECTICUT
CONNECTICUT SITING COUNCIL
Ten Franklin Square, New Britain, CT 06051
Phone: (860) 827-2935 Fax: (860) 827-2950
E-Mail: siting.council@ct.gov
Web Site: portal.ct.gov/csc

VIA ELECTRONIC MAIL

September 15, 2020

Anne Marie Zsamba
Real Estate Specialist
Crown Castle
3 Corporate Park Drive, Suite 101
Clifton Park, NY 12065

RE: **EM-T-MOBILE-015-200831** – T-Mobile notice of intent to modify an existing telecommunications facility located at 205 Kaechele Place, Bridgeport, Connecticut.

Dear Ms. Zsamba:

The Connecticut Siting Council (Council) is in receipt of your correspondence of September 14, 2020 submitted in response to the Council's September 14, 2020 notification of an incomplete request for exempt modification with regard to the above-referenced matter.

The submission renders the request for exempt modification complete and the Council will process the request in accordance with the Federal Communications Commission 60-day timeframe.

Thank you for your attention and cooperation.

Sincerely,

s/ Melanie A. Bachman

Melanie A. Bachman
Executive Director

MAB/IN/emr

Crown Castle
3 Corporate Park Drive, Suite 101
Clifton Park, NY 12065

September 14, 2020

Melanie A. Bachman
Executive Director
Connecticut Siting Council
10 Franklin Square
New Britain, CT 06051

RE: **EM-T-MOBILE-015-200831 –** T-Mobile notice of intent to modify an existing telecommunications facility located at 205 Kaechele Place, Bridgeport, Connecticut

Dear Ms. Bachman:

I am in receipt of your notice of incomplete correspondence of today's date for the above noted telecommunication filing. Enclosed please find a copy of the Structural Analysis for this site bearing both the stamp and seal of the Connecticut Professional Engineer. My apologies, there must have been an error in merging the PDFs. Please confirm this now renders the filing complete. Thank you kindly.

Sincerely,

Anne Marie Zsamba

Anne Marie Zsamba
Site Acquisition Specialist
3 Corporate Park Drive, Suite 101,
Clifton Park, NY 12065
(201) 236-9224
annemarie.zsamba@crowncastle.com

Enclosure

PAUL J. FORD & COMPANY

Date: **June 22, 2020**

Darcy Tarr
Crown Castle
6325 Ardrey Kell Rd, Suite 600
Charlotte, NC 28277

Paul J. Ford and Company
250 East Broad St., Ste 600
Columbus, OH 43215
614-221-6679

Subject:	**Structural Analysis Report**	
Carrier Designation:	***T-Mobile* Co-Locate**	
	Carrier Site Number:	CTFF334A
	Carrier Site Name:	CTFF334A
Crown Castle Designation:	**Crown Castle BU Number:**	841288
	Crown Castle Site Name:	BRIDGEPORT NORTH
	Crown Castle JDE Job Number:	576586
	Crown Castle Work Order Number:	1861586
	Crown Castle Order Number:	494425 Rev. 1
Engineering Firm Designation:	**Paul J. Ford and Company Project Number:**	37520-1130.001.7805
Site Data:	**205 KAECHELE PLACE, BRIDGEPORT, Fairfield County, CT** **Latitude *41° 13' 24.04"*, Longitude *-73° 13' 0.38"*** **150 Foot - Monopole Tower**	

Dear Darcy Tarr,

Paul J. Ford and Company is pleased to submit this **"Structural Analysis Report"** to determine the structural integrity of the above mentioned tower.

The purpose of the analysis is to determine acceptability of the tower stress level. Based on our analysis we have determined the tower stress level for the structure and foundation, under the following load case, to be:

LC7: Proposed Equipment Configuration **Sufficient Capacity (81.7%)**

This analysis utilizes an ultimate 3-second gust wind speed of 125 mph as required by the 2018 Connecticut State Building Code and Appendix N. Applicable Standard references and design criteria are listed in Section 2 - Analysis Criteria.

Respectfully submitted by:

Jared Forbes, E.I.
Structural Designer
jforbes@pauljford.com

RMF

STATE OF CONNECTICUT
JUSTIN T. KLINE
No. 30301
LICENSED
PROFESSIONAL ENGINEER

2020.06.22
15:50:47-04'00'

TABLE OF CONTENTS

1) INTRODUCTION

2) ANALYSIS CRITERIA
Table 1 - Proposed Equipment Configuration
Table 2 - Other Considered Equipment

3) ANALYSIS PROCEDURE
Table 3 - Documents Provided
3.1) Analysis Method
3.2) Assumptions

4) ANALYSIS RESULTS
Table 4 - Section Capacity (Summary)
Table 5 – Tower Component Stresses vs. Capacity - LC7
4.1) Recommendations

5) APPENDIX A
tnxTower Output

6) APPENDIX B
Base Level Drawing

7) APPENDIX C
Additional Calculations

1) INTRODUCTION

This tower is a 150 ft Monopole tower designed by ITT MEYER INC. and mapped by GPD in April of 2008.

The tower has been modified multiple times to accommodate additional loading.

2) ANALYSIS CRITERIA

TIA-222 Revision:	TIA-222-H
Risk Category:	II
Wind Speed:	125 mph
Exposure Category:	B
Topographic Factor:	1
Ice Thickness:	1.5 in
Wind Speed with Ice:	50 mph
Service Wind Speed:	60 mph

Table 1 - Proposed Equipment Configuration

Mounting Level (ft)	Center Line Elevation (ft)	Number of Antennas	Antenna Manufacturer	Antenna Model	Number of Feed Lines	Feed Line Size (in)
120.0	120.0	3	ericsson	AIR -32 B2A/B66AA	9 1	1-5/8 1-1/2
		3	ericsson	AIR 21 B2A/B4P		
		3	ericsson	AIR6449 B41		
		3	ericsson	KRY 112 144/1		
		3	ericsson	RADIO 4449 B71 B85A_T-MOBILE		
		3	ericsson	RRUS 4415 B25_CCIV2		
		3	rfs celwave	APXVAARR24_43-U-NA20		
		1	tower mounts	Platform Mount [LP 1301-1]		

Table 2 - Other Considered Equipment

Mounting Level (ft)	Center Line Elevation (ft)	Number of Antennas	Antenna Manufacturer	Antenna Model	Number of Feed Lines	Feed Line Size (in)
150.0	154.0	3	cci antennas	HPA-65R-BUU-H6	12 2 4 2	1-5/8 3/8 3/4 2" Conduit
		6	cci antennas	TPX-070821		
		3	ericsson	RRUS 11		
		3	ericsson	RRUS 32		
		3	ericsson	RRUS 32 B2		
		3	ericsson	RRUS 32 B66		
		3	powerwave technologies	1001940		
		6	powerwave technologies	7020.00		
		3	powerwave technologies	7770.00		
		3	powerwave technologies	TT19-08BP111-001		
		3	quintel technology	QS66512-2		
		2	raycap	DC6-48-60-18-8F		
	150.0	1	tower mounts	Platform Mount (LP 101-1)		
147.0	147.0	3	ericsson	TME-RRUS-11	-	-
		1	raycap	TME-DC6-48-60-18-8F		
		1	tower mounts	Side Arm Mount [SO 102-3]		
		1	tower mounts	Pipe Mount [PM 601-3]		
138.0	143.0	1	andrew	VHLP2-18	3 1 2	1-1/4 1-5/8 1/2
		1	andrew	VHLP2-23		
		1	clearwire	CW JUNCTION BOX		
		2	dragonwave	HORIZON COMPACT		
	140.0	3	alcatel lucent	PCS 1900MHZ 4X45W-65MHZ		
		6	alcatel lucent	RRH2X50-800		
		3	commscope	NNVV-65B-R4 w/ Mount Pipe		
		3	nokia	AAHC w/ Mount Pipe		
	138.0	1	tower mounts	Platform Mount [LP 1202_KCKR_HR1]		
99.0	100.0	3	antel	BXA-70063/4CF w/ Mount Pipe	6 1	1-5/8 1-1/4
		3	commscope	CBC78T-DS-43-2X		
		6	commscope	JAHH-65A-R3B w/ Mount Pipe		
		1	rfs celwave	DB-C1-12C-24AB-0Z		
		3	samsung telecommunications	20W CBRS		
		3	samsung telecommunications	CBRS w/ Mount Pipe		
		3	samsung telecommunications	RFV01U-D1A		
		3	samsung telecommunications	RFV01U-D2A		
	99.0	1	tower mounts	T-Arm Mount [TA 602-3]		

3) ANALYSIS PROCEDURE

Table 3 - Documents Provided

Document	Remarks	Reference	Source
4-GEOTECHNICAL REPORTS	FDH, 08-09065E G1, 09/23/2008	5110784	CCISITES
4-TOWER FOUNDATION DRAWINGS/DESIGN/SPECS	FDH, 08-09065E NA, 09/23/2008 (Mapping)	5110783	CCISITES
4-TOWER MANUFACTURER DRAWINGS	GPD, 2014777.841288.02, 04/11/2008 (Mapping)	4710143	CCISITES
4-TOWER REINFORCEMENT DESIGN/DRAWINGS/DATA	GPD, 2013801.02, 04/03/2013	4945043	CCISITES
4-TOWER REINFORCEMENT DESIGN/DRAWINGS/DATA	GPD, 2008264.38, 10/16/2008	5237204	CCISITES
4-POST-MODIFICATION INSPECTION	TEP, 25567.42283, 10/22/2014	5401472	CCISITES
4-TOWER REINFORCEMENT DESIGN/DRAWINGS/DATA	GPD, 2014777.814288.03, 09/19/2014	5303781	CCISITES
4-POST-MODIFICATION INSPECTION	TEP, 25567_26102, 06/05/2015	5739992	CCISITES
4-TOWER REINFORCEMENT DESIGN/DRAWINGS/DATA	GPD, 2017777.84128807, 01/09/2017	6650617	CCISITES
4-POST-MODIFICATION INSPECTION	Crown Castle, 841288, 05/31/2017	6894091	CCISITES
4-TOWER REINFORCEMENT DESIGN/DRAWINGS/DATA	PJF, 37517-0750.003.7700, 03/31/2017	6801057	CCISITES
4-POST-MODIFICATION INSPECTION	TEP, 25567.87194, 06/08/2018	7594134	CCISITES

3.1) Analysis Method

tnxTower (version 8.0.5.0), a commercially available analysis software package, was used to create a three-dimensional model of the tower and calculate member stresses for various loading cases. Selected output from the analysis is included in Appendix A. When applicable, Crown Castle has calculated and provided the effective area for panel antennas using approved methods following the intent of the TIA-222 standard.

tnxTower was used to determine the loads on the modified structure. Additional calculations were performed to determine the stresses in the pole and in the reinforcing elements. These calculations are presented in Appendix C.

3.2) Assumptions

1) Tower and structures were maintained in accordance with the TIA-222 standard.
2) The configuration of antennas, transmission cables, mounts and other appurtenances are as specified in Tables 1 and 2 and the referenced drawings.
3) The structure was modified in conformance with the referenced modification drawings as shown in the referenced post modification inspection.
4) The monopole manufacturer drawings are not available at the time of this analysis. Therefore, we have assumed the steel yield strength(s) (Fy) as per the following:
   Anchor rods: ASTM A615 (Fu = 100 ksi, Fy = 75 ksi)
   Pole Shaft: ASTM A572/A607 Gr 50
   Base Plate: ASTM A572 Gr 50

This analysis may be affected if any assumptions are not valid or have been made in error. Paul J. Ford and Company should be notified to determine the effect on the structural integrity of the tower.

4) ANALYSIS RESULTS

Table 4 - Section Capacity (Summary)

Elevation (ft)	Component Type	Size	Critical Element	% Capacity	Pass / Fail
150 - 145	Pole	TP15.732x15x0.2188	Pole	22.6%	Pass
145 - 140	Pole	TP16.463x15.732x0.2188	Pole	36.4%	Pass
140 - 135	Pole	TP17.195x16.463x0.2188	Pole	55.9%	Pass
135 - 130	Pole	TP17.927x17.195x0.2188	Pole	73.6%	Pass
130 - 128.5	Pole	TP18.146x17.927x0.2188	Pole	78.4%	Pass
128.5 - 128.25	Pole + Reinf.	TP18.183x18.146x0.6688	Reinf. 12 Tension Rupture	39.5%	Pass
128.25 - 123.25	Pole + Reinf.	TP18.915x18.183x0.6438	Reinf. 12 Tension Rupture	48.0%	Pass
123.25 - 118.25	Pole + Reinf.	TP19.646x18.915x0.6188	Reinf. 12 Tension Rupture	57.9%	Pass
118.25 - 113.25	Pole + Reinf.	TP20.378x19.646x0.6063	Reinf. 12 Tension Rupture	69.7%	Pass
113.25 - 109	Pole + Reinf.	TP21x20.378x0.5938	Reinf. 12 Tension Rupture	79.3%	Pass
109 - 108.75	Pole + Reinf.	TP21.038x21x0.725	Reinf. 7 Tension Rupture	60.5%	Pass
108.75 - 104.17	Pole + Reinf.	TP21.729x21.038x0.7	Reinf. 7 Tension Rupture	68.1%	Pass
104.17 - 103.92	Pole + Reinf.	TP21.767x21.729x0.975	Reinf. 7 Tension Rupture	61.0%	Pass
103.92 - 103.17	Pole + Reinf.	TP21.88x21.767x0.95	Reinf. 7 Tension Rupture	62.1%	Pass
103.17 - 102.92	Pole + Reinf.	TP21.918x21.88x1.125	Reinf. 7 Tension Rupture	50.6%	Pass
102.92 - 102.42	Pole + Reinf.	TP21.994x21.918x1.1	Reinf. 7 Tension Rupture	51.2%	Pass
102.42 - 102.17	Pole + Reinf.	TP22.031x21.994x0.925	Reinf. 7 Tension Rupture	56.4%	Pass
102.17 - 100.92	Pole + Reinf.	TP22.22x22.031x0.925	Reinf. 7 Tension Rupture	57.9%	Pass
100.92 - 100.67	Pole + Reinf.	TP22.258x22.22x1	Reinf. 7 Tension Rupture	56.7%	Pass
100.67 - 99.58	Pole + Reinf.	TP22.422x22.258x1	Reinf. 7 Tension Rupture	58.0%	Pass
99.58 - 99.33	Pole + Reinf.	TP22.46x22.422x1.375	Reinf. 17 Tension Rupture	41.6%	Pass
99.33 - 95.25	Pole + Reinf.	TP23.076x22.46x1.325	Reinf. 17 Tension Rupture	45.9%	Pass
95.25 - 95	Pole + Reinf.	TP23.114x23.076x1.025	Reinf. 18 Tension Rupture	56.7%	Pass
95 - 90	Pole + Reinf.	TP23.869x23.114x1	Reinf. 18 Tension Rupture	62.5%	Pass
90 - 85	Pole + Reinf.	TP24.624x23.869x0.9625	Reinf. 18 Tension Rupture	68.1%	Pass
85 - 80.5	Pole + Reinf.	TP25.304x24.624x0.925	Reinf. 18 Tension Rupture	72.9%	Pass
80.5 - 80.25	Pole + Reinf.	TP25.341x25.304x1.3	Reinf. 6 Tension Rupture	60.4%	Pass
80.25 - 75.25	Pole + Reinf.	TP26.096x25.341x1.25	Reinf. 6 Tension Rupture	64.8%	Pass
75.25 - 73.58	Pole + Reinf.	TP26.348x26.096x1.225	Reinf. 6 Tension Rupture	66.2%	Pass
73.58 - 73.33	Pole + Reinf.	TP26.386x26.348x1.225	Reinf. 6 Tension Rupture	66.4%	Pass
73.33 - 72	Pole + Reinf.	TP27.04x26.386x1.2	Reinf. 6 Tension Rupture	67.5%	Pass
72 - 67	Pole + Reinf.	TP26.897x26.087x1.2625	Reinf. 6 Tension Rupture	69.2%	Pass
67 - 66.75	Pole + Reinf.	TP26.937x26.897x1.2625	Reinf. 6 Tension Rupture	69.4%	Pass
66.75 - 66.5	Pole + Reinf.	TP26.978x26.937x1.3625	Reinf. 5 Tension Rupture	60.4%	Pass
66.5 - 61.5	Pole + Reinf.	TP27.788x26.978x1.3125	Reinf. 5 Tension Rupture	63.5%	Pass
61.5 - 56.5	Pole + Reinf.	TP28.598x27.788x1.2625	Reinf. 5 Tension Rupture	66.4%	Pass
56.5 - 51.5	Pole + Reinf.	TP29.408x28.598x1.2375	Reinf. 5 Tension Rupture	69.3%	Pass
51.5 - 48.25	Pole + Reinf.	TP29.934x29.408x1.2125	Reinf. 5 Tension Rupture	71.1%	Pass
48.25 - 48	Pole + Reinf.	TP29.974x29.934x1.6375	Reinf. 2 Connection	62.4%	Pass
48 - 44.25	Pole + Reinf.	TP30.582x29.974x1.6125	Reinf. 2 Compression	64.1%	Pass
44.25 - 44	Pole + Reinf.	TP30.622x30.582x1.7125	Reinf. 2 Compression	60.6%	Pass

Elevation (ft)	Component Type	Size	Critical Element	% Capacity	Pass / Fail
44 - 43.08	Pole + Reinf.	TP30.771x30.622x1.7125	Reinf. 2 Compression	60.9%	Pass
43.08 - 42.83	Pole + Reinf.	TP30.812x30.771x1.7125	Reinf. 2 Compression	61.0%	Pass
42.83 - 37.83	Pole + Reinf.	TP31.622x30.812x1.6375	Reinf. 2 Compression	63.1%	Pass
37.83 - 34	Pole + Reinf.	TP32.89x31.622x1.6125	Reinf. 2 Compression	64.7%	Pass
34 - 29	Pole + Reinf.	TP32.462x31.617x1.7063	Reinf. 2 Compression	64.1%	Pass
29 - 24	Pole + Reinf.	TP33.306x32.462x1.6563	Reinf. 2 Compression	65.7%	Pass
24 - 23.75	Pole + Reinf.	TP33.348x33.306x1.6563	Reinf. 2 Compression	65.8%	Pass
23.75 - 23.5	Pole + Reinf.	TP33.391x33.348x1.6563	Reinf. 2 Compression	65.9%	Pass
23.5 - 18.5	Pole + Reinf.	TP34.235x33.391x1.6063	Reinf. 2 Compression	67.4%	Pass
18.5 - 13.5	Pole + Reinf.	TP35.08x34.235x1.5563	Reinf. 2 Compression	68.9%	Pass
13.5 - 11	Pole + Reinf.	TP35.502x35.08x1.5313	Reinf. 2 Connection	69.6%	Pass
11 - 10.75	Pole + Reinf.	TP35.544x35.502x1.2313	Reinf. 3 Tension Rupture	66.2%	Pass
10.75 - 6	Pole + Reinf.	TP36.347x35.544x1.2563	Reinf. 3 Tension Rupture	67.6%	Pass
6 - 5.75	Pole + Reinf.	TP36.389x36.347x1.5313	Reinf. 3 Tension Rupture	58.4%	Pass
5.75 - 3.25	Pole + Reinf.	TP36.811x36.389x1.5063	Reinf. 3 Tension Rupture	59.1%	Pass
3.25 - 3	Pole + Reinf.	TP36.853x36.811x1.1563	Reinf. 20 Compression	74.6%	Pass
3 - 0	Pole + Reinf.	TP37.36x36.853x1.1313	Reinf. 20 Compression	75.4%	Pass
				Summary	
			Pole	78.4%	Pass
			Reinforcement	79.3%	Pass
			Overall	79.3%	Pass

Table 5 - Tower Component Stresses vs. Capacity - LC7

Notes	Component	Elevation (ft)	% Capacity	Pass / Fail
1	Flange Connection	109	81.7	Pass
1	Anchor Rods	0	74.0	Pass
1	Base Plate	0	53.8	Pass
1	Base Foundation Structural Steel	0	42.5	Pass
1	Base Foundation Soil Interaction	0	65.5	Pass

Structure Rating (max from all components) =	81.7%

Notes:

- All structural ratings are per TIA-222-H Section 15.5

1) See additional documentation in "Appendix C – Additional Calculations" for calculations supporting the % capacity consumed.

4.1) Recommendations

The tower and its foundation have sufficient capacity to carry the proposed load configuration. No modifications are required at this time.

APPENDIX A

TNXTOWER OUTPUT

Section	Length (ft)	Number of Sides	Thickness (in)	Socket Length (ft)	Top Dia (in)	Bot Dia (in)	Grade	Weight (K)
1	5.0000	12	0.2188		15.0000	15.7317		0.2
2	5.0000	12	0.2188		15.7317	16.4634		0.2
3	5.0000	12	0.2188		16.4634	17.1951		0.2
4	5.0000	12	0.2188		17.1951	17.9268		0.2
5	5.0000	12	0.2188		17.9268	18.6585		0.1
6	5.0000	12	0.2188		18.6585	18.9146		0.1
7	5.0000	12	0.6406		18.9146	19.6463		0.6
8	5.0000	12	0.6188		19.6463	20.3780		0.6
9	5.0000	12	0.6062		20.3780	21.0000		0.6
10	2.5000	12	0.5938		21.0000	21.7317		0.5
11	2.5000	12	0.7500		21.7317	22.4634		0.6
12	2.5000	12	0.7500		22.4634	23.1951		0.6
13	2.5000	12	0.7500		23.1951	23.9268		0.6
14	2.5000	12	0.7500		23.9268	24.6585		0.6
15	2.5000	12	0.7500		24.6585	25.3903		0.6
16	2.5000	12	0.7500		25.3903	26.1220		0.6
17	2.5000	12	0.7500		26.1220	26.8537		0.6
18	2.5000	12	0.7500		26.8537	27.5854		0.6
19	2.5000	12	0.7500		27.5854	28.3171		0.6
20	2.5000	12	0.7500		28.3171	29.0488		0.6
21	2.5000	12	0.7500		29.0488	29.7805		0.6
22	2.5000	12	0.7500		29.7805	30.5122		0.6
23	2.5000	12	0.7500		30.5122	31.2439		0.6
24	5.0000	12	1.0000		31.2439	23.1220		1.0
25	5.0000	12	0.9625		23.1220	23.8690		1.0
26	5.0000	12	0.9250		23.8690	24.6160		0.9
27	5.0000	12	0.8875		24.6160	25.3630		0.9
28	5.0000	12	0.8500		25.3630	26.1100		0.9
29	5.0000	12	0.8125		26.1100	26.8570		0.8
30	5.0000	12	0.7750		26.8570	27.6040		0.8
31	5.0000	12	0.7375		27.6040	28.3510		0.8
32	5.0000	12	0.7000		28.3510	29.0980		0.8
33	5.0000	12	0.6625		29.0980	29.8450		0.7
34	5.0000	12	0.6250		29.8450	30.5920		0.7
35	5.0000	12	1.3125		30.5920	26.9220		1.6
36	5.0000	12	1.2625		26.9220	27.7870		1.6
37	5.0000	12	1.2375		27.7870	28.5976		1.6
38	5.0000	12	1.2125		28.5976	29.4075		1.6
39	5.0000	12	1.1875		29.4075	30.2175		1.6
40	5.0000	12	1.1625		30.2175	30.8275		1.5
41	5.0000	12	1.1375		30.8275	31.6375		1.5
42	5.0000	12	1.1125		31.6375	32.4475		1.5
43	5.0000	12	1.0875		32.4475	33.2575		1.5
44	5.0000	12	1.0625		33.2575	34.0675		1.5
45	5.0000	12	1.0375	4.0000	34.0675	31.6217		3.4
46	5.0000	12	1.0125		31.6217	32.8900		2.3
47	5.0000	12	1.0000		32.8900	33.5568		2.3
48	5.0000	12	0.9875		33.5568	34.2236		2.3
49	5.0000	12	0.9750		34.2236	34.8904		2.3
50	5.0000	12	1.6063		34.8904	33.3352		2.3
51	5.0000	12	1.5563		33.3352	34.2352		2.3
52	5.0000	12	1.5313		34.2352	35.0797		2.3
53	5.0000	12	1.5063		35.0797	35.9242		2.3
54	5.0000	12	1.4813		35.9242	36.7687		2.2
55	5.0000	12	1.4563		36.7687	37.6132		2.2
56	5.0000	12	1.4313		37.6132	38.4577		2.2
57	5.0000	12	1.4063		38.4577	39.3022		2.2
58	3.0000	12	1.1813		39.3022	37.8900		1.0
Weight (K)								42.7

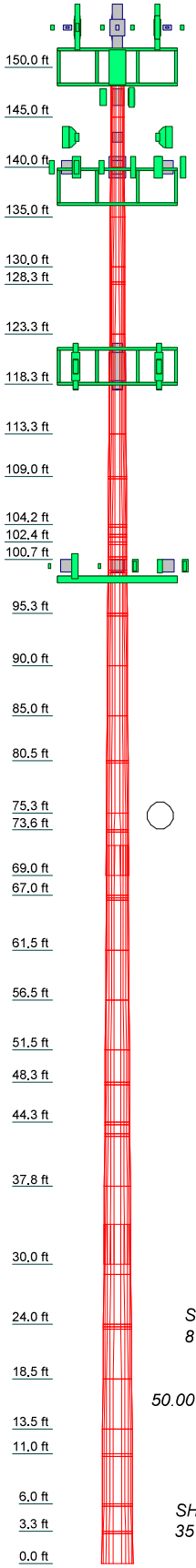

ALL REACTIONS ARE FACTORED

AXIAL 114 K

SHEAR 8 K — *MOMENT 887 kip-ft*

TORQUE 1 kip-ft
50.00 mph WIND - 1.5000 in ICE

AXIAL 75 K

SHEAR 35 K — *MOMENT 3679 kip-ft*

TORQUE 5 kip-ft
REACTIONS - 125.00 mph WIND

MATERIAL STRENGTH

GRADE	Fy	Fu	GRADE	Fy	Fu
A572-50	50 ksi	65 ksi			

TOWER DESIGN NOTES

1. Tower is located in Fairfield County, Connecticut.
2. Tower designed for Exposure B to the TIA-222-H Standard.
3. Tower designed for a 125.00 mph basic wind in accordance with the TIA-222-H Standard.
4. Tower is also designed for a 50.00 mph basic wind with 1.50 in ice. Ice is considered to increase in thickness with height.
5. Deflections are based upon a 60.00 mph wind.
6. Tower Risk Category II.
7. Topographic Category 1 with Crest Height of 0.0000 ft
8. TIA-222-H Annex S
9. TOWER RATING: 79.3%

PJFLogo

Paul J. Ford and Company
250 East Broad St., Ste 600
Columbus, OH 43215
Phone: 614-221-6679
FAX:

Job: **150' Monopole | Bridgeport, CT**			
Project: **PJF# 37520-1130 | BU 841288 |**			
Client: Crown Castle	Drawn by: jforbes	App'd:	
Code: TIA-222-H	Date: 06/22/20	Scale: NTS	
Path:		Dwg No. E-1	

Tower Input Data

The tower is a monopole.
This tower is designed using the TIA-222-H standard.
The following design criteria apply:

1) Tower is located in Fairfield County, Connecticut.
2) Tower base elevation above sea level: 240.0000 ft.
3) Basic wind speed of 125.00 mph.
4) Risk Category II.
5) Exposure Category B.
6) Simplified Topographic Factor Procedure for wind speed-up calculations is used.
7) Topographic Category: 1.
8) Crest Height: 0.0000 ft.
9) Nominal ice thickness of 1.5000 in.
10) Ice thickness is considered to increase with height.
11) Ice density of 56.00 pcf.
12) A wind speed of 50.00 mph is used in combination with ice.
13) Temperature drop of 50.00 °F.
14) Deflections calculated using a wind speed of 60.00 mph.
15) TIA-222-H Annex S.
16) A non-linear (P-delta) analysis was used.
17) Pressures are calculated at each section.
18) Stress ratio used in pole design is 1.05.
19) Tower analysis based on target reliabilities in accordance with Annex S.
20) Load Modification Factors used: $K_{es}(F_w) = 0.95$, $K_{es}(t_i) = 0.85$.
21) Local bending stresses due to climbing loads, feed line supports, and appurtenance mounts are not considered.

Options

Consider Moments - Legs	Distribute Leg Loads As Uniform	Use ASCE 10 X-Brace Ly Rules
Consider Moments - Horizontals	Assume Legs Pinned	Calculate Redundant Bracing Forces
Consider Moments - Diagonals	√ Assume Rigid Index Plate	Ignore Redundant Members in FEA
Use Moment Magnification	√ Use Clear Spans For Wind Area	SR Leg Bolts Resist Compression
Use Code Stress Ratios	Use Clear Spans For KL/r	All Leg Panels Have Same Allowable
√ Use Code Safety Factors - Guys	Retension Guys To Initial Tension	Offset Girt At Foundation
Escalate Ice	√ Bypass Mast Stability Checks	√ Consider Feed Line Torque
Always Use Max Kz	√ Use Azimuth Dish Coefficients	Include Angle Block Shear Check
Use Special Wind Profile	√ Project Wind Area of Appurt.	Use TIA-222-H Bracing Resist. Exemption
Include Bolts In Member Capacity	Autocalc Torque Arm Areas	Use TIA-222-H Tension Splice Exemption
Leg Bolts Are At Top Of Section	Add IBC .6D+W Combination	**Poles**
Secondary Horizontal Braces Leg	Sort Capacity Reports By Component	√ Include Shear-Torsion Interaction
Use Diamond Inner Bracing (4 Sided)	Triangulate Diamond Inner Bracing	Always Use Sub-Critical Flow
SR Members Have Cut Ends	Treat Feed Line Bundles As Cylinder	Use Top Mounted Sockets
SR Members Are Concentric	Ignore KL/ry For 60 Deg. Angle Legs	Pole Without Linear Attachments
		Pole With Shroud Or No Appurtenances
		Outside and Inside Corner Radii Are Known

Tapered Pole Section Geometry

Section	Elevation ft	Section Length ft	Splice Length ft	Number of Sides	Top Diameter in	Bottom Diameter in	Wall Thickness in	Bend Radius in	Pole Grade
L1	150.0000-145.0000	5.0000	0.00	12	15.0000	15.7317	0.2188	0.8750	A572-50 (50 ksi)
L2	145.0000-140.0000	5.0000	0.00	12	15.7317	16.4634	0.2188	0.8750	A572-50 (50 ksi)
L3	140.0000-135.0000	5.0000	0.00	12	16.4634	17.1951	0.2188	0.8750	A572-50 (50 ksi)
L4	135.0000-130.0000	5.0000	0.00	12	17.1951	17.9268	0.2188	0.8750	A572-50 (50 ksi)

Section	Elevation ft	Section Length ft	Splice Length ft	Number of Sides	Top Diameter in	Bottom Diameter in	Wall Thickness in	Bend Radius in	Pole Grade
L5	130.0000-128.5000	1.5000	0.00	12	17.9268	18.1463	0.2188	0.8750	A572-50 (50 ksi)
L6	128.5000-128.2500	0.2500	0.00	12	18.1463	18.1829	0.6687	2.6750	A572-50 (50 ksi)
L7	128.2500-123.2500	5.0000	0.00	12	18.1829	18.9146	0.6438	2.5750	A572-50 (50 ksi)
L8	123.2500-118.2500	5.0000	0.00	12	18.9146	19.6463	0.6188	2.4750	A572-50 (50 ksi)
L9	118.2500-113.2500	5.0000	0.00	12	19.6463	20.3780	0.6062	2.4250	A572-50 (50 ksi)
L10	113.2500-109.0000	4.2500	0.00	12	20.3780	21.0000	0.5938	2.3750	A572-50 (50 ksi)
L11	109.0000-108.7500	0.2500	0.00	12	21.0000	21.0377	0.7250	2.9000	A572-50 (50 ksi)
L12	108.7500-104.1700	4.5800	0.00	12	21.0377	21.7293	0.7000	2.8000	A572-50 (50 ksi)
L13	104.1700-103.9200	0.2500	0.00	12	21.7293	21.7671	0.9750	3.9000	A572-50 (50 ksi)
L14	103.9200-103.1700	0.7500	0.00	12	21.7671	21.8803	0.9500	3.8000	A572-50 (50 ksi)
L15	103.1700-102.9200	0.2500	0.00	12	21.8803	21.9181	1.1250	4.5000	A572-50 (50 ksi)
L16	102.9200-102.4200	0.5000	0.00	12	21.9181	21.9936	1.1000	4.4000	A572-50 (50 ksi)
L17	102.4200-102.1700	0.2500	0.00	12	21.9936	22.0313	0.9250	3.7000	A572-50 (50 ksi)
L18	102.1700-100.9200	1.2500	0.00	12	22.0313	22.2201	0.9250	3.7000	A572-50 (50 ksi)
L19	100.9200-100.6700	0.2500	0.00	12	22.2201	22.2578	1.0000	4.0000	A572-50 (50 ksi)
L20	100.6700-99.5800	1.0900	0.00	12	22.2578	22.4224	1.0000	4.0000	A572-50 (50 ksi)
L21	99.5800-99.3300	0.2500	0.00	12	22.4224	22.4602	1.3750	5.5000	A572-50 (50 ksi)
L22	99.3300-95.2500	4.0800	0.00	12	22.4602	23.0763	1.3250	5.3000	A572-50 (50 ksi)
L23	95.2500-95.0000	0.2500	0.00	12	23.0763	23.1140	1.0250	4.1000	A572-50 (50 ksi)
L24	95.0000-90.0000	5.0000	0.00	12	23.1140	23.8690	1.0000	4.0000	A572-50 (50 ksi)
L25	90.0000-85.0000	5.0000	0.00	12	23.8690	24.6240	0.9625	3.8500	A572-50 (50 ksi)
L26	85.0000-80.5000	4.5000	0.00	12	24.6240	25.3035	0.9250	3.7000	A572-50 (50 ksi)
L27	80.5000-80.2500	0.2500	0.00	12	25.3035	25.3412	1.3000	5.2000	A572-50 (50 ksi)
L28	80.2500-75.2500	5.0000	0.00	12	25.3412	26.0963	1.2500	5.0000	A572-50 (50 ksi)
L29	75.2500-73.5800	1.6700	0.00	12	26.0963	26.3484	1.2250	4.9000	A572-50 (50 ksi)
L30	73.5800-73.3300	0.2500	0.00	12	26.3484	26.3862	1.2250	4.9000	A572-50 (50 ksi)
L31	73.3300-69.0000	4.3300	3.00	12	26.3862	27.0400	1.2000	4.8000	A572-50 (50 ksi)
L32	69.0000-67.0000	5.0000	0.00	12	26.0870	26.8969	1.2625	5.0500	A572-50 (50 ksi)
L33	67.0000-66.7500	0.2500	0.00	12	26.8969	26.9374	1.2625	5.0500	A572-50 (50 ksi)
L34	66.7500-66.5000	0.2500	0.00	12	26.9374	26.9779	1.3625	5.4500	A572-50 (50 ksi)
L35	66.5000-61.5000	5.0000	0.00	12	26.9779	27.7877	1.3125	5.2500	A572-50 (50 ksi)
L36	61.5000-56.5000	5.0000	0.00	12	27.7877	28.5976	1.2625	5.0500	A572-50 (50 ksi)
L37	56.5000-51.5000	5.0000	0.00	12	28.5976	29.4075	1.2375	4.9500	A572-50 (50 ksi)
L38	51.5000-48.2500	3.2500	0.00	12	29.4075	29.9339	1.2125	4.8500	A572-50 (50 ksi)

Section	Elevation ft	Section Length ft	Splice Length ft	Number of Sides	Top Diameter in	Bottom Diameter in	Wall Thickness in	Bend Radius in	Pole Grade
L39	48.2500-48.0000	0.2500	0.00	12	29.9339	29.9744	1.6375	6.5500	A572-50 (50 ksi)
L40	48.0000-44.2500	3.7500	0.00	12	29.9744	30.5818	1.6125	6.4500	A572-50 (50 ksi)
L41	44.2500-44.0000	0.2500	0.00	12	30.5818	30.6223	1.7125	6.8500	A572-50 (50 ksi)
L42	44.0000-43.0800	0.9200	0.00	12	30.6223	30.7714	1.7125	6.8500	A572-50 (50 ksi)
L43	43.0800-42.8300	0.2500	0.00	12	30.7714	30.8118	1.7125	6.8500	A572-50 (50 ksi)
L44	42.8300-37.8300	5.0000	0.00	12	30.8118	31.6217	1.6375	6.5500	A572-50 (50 ksi)
L45	37.8300-30.0000	7.8300	4.00	12	31.6217	32.8900	1.6125	6.4500	A572-50 (50 ksi)
L46	30.0000-29.0000	5.0000	0.00	12	31.6171	32.4616	1.7063	6.8252	A572-50 (50 ksi)
L47	29.0000-24.0000	5.0000	0.00	12	32.4616	33.3062	1.6563	6.6252	A572-50 (50 ksi)
L48	24.0000-23.7500	0.2500	0.00	12	33.3062	33.3484	1.6563	6.6252	A572-50 (50 ksi)
L49	23.7500-23.5000	0.2500	0.00	12	33.3484	33.3906	1.6563	6.6252	A572-50 (50 ksi)
L50	23.5000-18.5000	5.0000	0.00	12	33.3906	34.2352	1.6063	6.4252	A572-50 (50 ksi)
L51	18.5000-13.5000	5.0000	0.00	12	34.2352	35.0797	1.5563	6.2252	A572-50 (50 ksi)
L52	13.5000-11.0000	2.5000	0.00	12	35.0797	35.5020	1.5313	6.1252	A572-50 (50 ksi)
L53	11.0000-10.7500	0.2500	0.00	12	35.5020	35.5442	1.2313	4.9252	A572-50 (50 ksi)
L54	10.7500-6.0000	4.7500	0.00	12	35.5442	36.3465	1.2563	5.0252	A572-50 (50 ksi)
L55	6.0000-5.7500	0.2500	0.00	12	36.3465	36.3888	1.5313	6.1252	A572-50 (50 ksi)
L56	5.7500-3.2500	2.5000	0.00	12	36.3888	36.8110	1.5063	6.0252	A572-50 (50 ksi)
L57	3.2500-3.0000	0.2500	0.00	12	36.8110	36.8533	1.1563	4.6252	A572-50 (50 ksi)
L58	3.0000-0.0000	3.0000		12	36.8533	37.3600	1.1313	4.5252	A572-50 (50 ksi)

Tapered Pole Properties

Section	Tip Dia. in	Area in^2	I in^4	r in	C in	I/C in^3	J in^4	It/Q in^2	w in	w/t
L1	15.4520	10.4115	290.3510	5.2917	7.7700	37.3682	588.3299	5.1242	3.4337	15.697
	16.2095	10.9269	335.6400	5.5536	8.1490	41.1877	680.0975	5.3779	3.6298	16.594
L2	16.2095	10.9269	335.6400	5.5536	8.1490	41.1877	680.0975	5.3779	3.6298	16.594
	16.9670	11.4423	385.4093	5.8156	8.5280	45.1931	780.9437	5.6316	3.8259	17.49
L3	16.9670	11.4423	385.4093	5.8156	8.5280	45.1931	780.9437	5.6316	3.8259	17.49
	17.7245	11.9577	439.8702	6.0775	8.9071	49.3844	891.2963	5.8852	4.0220	18.386
L4	17.7245	11.9577	439.8702	6.0775	8.9071	49.3844	891.2963	5.8852	4.0220	18.386
	18.4821	12.4731	499.2341	6.3395	9.2861	53.7615	1011.5836	6.1389	4.2181	19.283
L5	18.4821	12.4731	499.2341	6.3395	9.2861	53.7615	1011.5836	6.1389	4.2181	19.283
	18.7093	12.6277	518.0309	6.4181	9.3998	55.1108	1049.6711	6.2150	4.2770	19.552
L6	18.5506	37.6358	1467.4061	6.2570	9.3998	156.1103	2973.3627	18.5232	3.0710	4.592
	18.5884	37.7146	1476.6407	6.2701	9.4188	156.7766	2992.0743	18.5620	3.0808	4.607
L7	18.5973	36.3565	1427.5348	6.2790	9.4188	151.5630	2892.5725	17.8936	3.1478	4.89
	19.3548	37.8733	1613.7555	6.5410	9.7978	164.7062	3269.9062	18.6401	3.3439	5.194
L8	19.3636	36.4523	1557.4612	6.5499	9.7978	158.9606	3155.8386	17.9407	3.4109	5.513
	20.1211	37.9101	1751.8965	6.8119	10.1768	172.1460	3549.8174	18.6582	3.6070	5.829
L9	20.1255	37.1686	1719.8898	6.8164	10.1768	169.0010	3484.9631	18.2933	3.6405	6.005
	20.8830	38.5970	1925.8929	7.0783	10.5558	182.4483	3902.3812	18.9963	3.8366	6.328
L10	20.8875	37.8251	1889.7635	7.0828	10.5558	179.0256	3829.1731	18.6164	3.8701	6.518
	21.5313	39.0142	2073.6481	7.3054	10.8780	190.6277	4201.7732	19.2016	4.0367	6.799
L11	21.4850	47.3320	2483.4900	7.2584	10.8780	228.3039	5032.2241	23.2954	3.6850	5.083
	21.5241	47.4201	2497.3879	7.2720	10.8976	229.1696	5060.3849	23.3387	3.6951	5.097

Section	Tip Dia. in	Area in^2	I in^4	r in	C in	I/C in^3	J in^4	It/Q in^2	w in	w/t
L12	21.5329	45.8413	2420.1851	7.2809	10.8976	222.0852	4903.9511	22.5617	3.7621	5.374
	22.2489	47.4001	2675.5691	7.5285	11.2558	237.7060	5421.4284	23.3289	3.9475	5.639
L13	22.1519	65.1582	3582.3878	7.4301	11.2558	318.2706	7258.8888	32.0689	3.2105	3.293
	22.1910	65.2767	3601.9713	7.4436	11.2753	319.4555	7298.5704	32.1272	3.2206	3.303
L14	22.1998	63.6794	3522.2880	7.4525	11.2753	312.3884	7137.1104	31.3411	3.2876	3.461
	22.3171	64.0259	3580.0876	7.4931	11.3340	315.8712	7254.2281	31.5116	3.3179	3.493
L15	22.2553	75.1862	4134.1218	7.4304	11.3340	364.7536	8376.8517	37.0044	2.8489	2.532
	22.2944	75.3229	4156.7204	7.4439	11.3536	366.1159	8422.6426	37.0717	2.8590	2.541
L16	22.3032	73.7376	4079.0265	7.4529	11.3536	359.2727	8265.2136	36.2914	2.9260	2.66
	22.3814	74.0051	4123.5673	7.4799	11.3927	361.9490	8355.4653	36.4230	2.9463	2.678
L17	22.4431	62.7528	3555.4072	7.5426	11.3927	312.0784	7204.2190	30.8850	3.4153	3.692
	22.4822	62.8652	3574.5529	7.5561	11.4122	313.2213	7243.0133	30.9403	3.4254	3.703
L18	22.4822	62.8652	3574.5529	7.5561	11.4122	313.2213	7243.0133	30.9403	3.4254	3.703
	22.6776	63.4274	3671.3127	7.6236	11.5100	318.9672	7439.0750	31.2170	3.4760	3.758
L19	22.6512	68.3287	3927.1987	7.5968	11.5100	341.1988	7957.5692	33.6293	3.2750	3.275
	22.6902	68.4502	3948.1952	7.6103	11.5296	342.4412	8000.1138	33.6891	3.2851	3.285
L20	22.6902	68.4502	3948.1952	7.6103	11.5296	342.4412	8000.1138	33.6891	3.2851	3.285
	22.8606	68.9802	4040.6144	7.6692	11.6148	347.8846	8187.3803	33.9500	3.3292	3.329
L21	22.7283	93.1875	5269.1568	7.5350	11.6148	453.6583	10676.7402	45.8640	2.3242	1.69
	22.7674	93.3546	5297.5595	7.5485	11.6344	455.3371	10734.2917	45.9463	2.3343	1.698
L22	22.7851	90.1732	5141.3236	7.5664	11.6344	441.9083	10417.7154	44.3805	2.4683	1.863
	23.4229	92.8017	5604.1579	7.7869	11.9535	468.8300	11355.5432	45.6742	2.6334	1.987
L23	23.5287	72.7802	4517.1585	7.8943	11.9535	377.8943	9152.9877	35.8202	3.4374	3.354
	23.5678	72.9047	4540.3973	7.9079	11.9731	379.2180	9200.0758	35.8815	3.4476	3.363
L24	23.5766	71.2071	4444.7131	7.9168	11.9731	371.2264	9006.1939	35.0460	3.5146	3.515
	24.3582	73.6382	4915.6771	8.1871	12.3641	397.5753	9960.4945	36.2425	3.7169	3.717
L25	24.3715	70.9930	4754.6524	8.2005	12.3641	384.5517	9634.2147	34.9406	3.8174	3.966
	25.1531	73.3329	5240.4596	8.4708	12.7552	410.8478	10618.5919	36.0922	4.0197	4.176
L26	25.1663	70.5875	5060.2692	8.4842	12.7552	396.7211	10253.4772	34.7410	4.1202	4.454
	25.8698	72.6114	5508.1340	8.7275	13.1072	420.2369	11160.9728	35.7371	4.3023	4.651
L27	25.7375	100.4787	7389.3951	8.5933	13.1072	563.7655	14972.9179	49.4525	3.2973	2.536
	25.7766	100.6367	7424.3136	8.6068	13.1268	565.5858	15043.6722	49.5303	3.3075	2.544
L28	25.7942	96.9673	7183.3965	8.6247	13.1268	547.2327	14555.5088	47.7243	3.4415	2.753
	26.5759	100.0062	7880.1482	8.8950	13.5179	582.9436	15967.3167	49.2200	3.6438	2.915
L29	26.5847	98.1046	7745.8797	8.9039	13.5179	573.0109	15695.2523	48.2841	3.7108	3.029
	26.8458	99.0993	7983.8834	8.9942	13.6485	584.9650	16177.5123	48.7737	3.7784	3.084
L30	26.8458	99.0993	7983.8834	8.9942	13.6485	584.9650	16177.5123	48.7737	3.7784	3.084
	26.8848	99.2482	8019.9268	9.0077	13.6680	586.7651	16250.5461	48.8470	3.7885	3.093
L31	26.8937	97.3194	7879.6959	9.0166	13.6680	576.5054	15966.4003	47.8976	3.8555	3.213
	27.5706	99.8458	8509.4325	9.2507	14.0067	607.5250	17242.4172	49.1410	4.0307	3.359
L32	27.0650	100.9178	7938.0666	8.8872	13.5131	587.4364	16084.6751	49.6687	3.6078	2.858
	27.4003	104.2102	8740.6094	9.1771	13.9326	627.3502	17710.8444	51.2891	3.8249	3.03
L33	27.4003	104.2102	8740.6094	9.1771	13.9326	627.3502	17710.8444	51.2891	3.8249	3.03
	27.4423	104.3748	8782.0969	9.1916	13.9536	629.3804	17794.9092	51.3701	3.8357	3.038
L34	27.4070	112.2034	9367.3963	9.1558	13.9536	671.3266	18980.8844	55.2231	3.5677	2.619
	27.4489	112.3810	9411.9624	9.1703	13.9745	673.5080	19071.1875	55.3105	3.5786	2.626

Section	Tip Dia. in	Area in^2	I in^4	r in	C in	I/C in^3	J in^4	It/Q in^2	w in	w/t
L35	27.4665	108.4683	9119.7655	9.1882	13.9745	652.5988	18479.1174	53.3848	3.7126	2.829
	28.3050	111.8910	10010.6285	9.4781	14.3941	695.4697	20284.2473	55.0694	3.9296	2.994
L36	28.3226	107.8318	9683.9305	9.4960	14.3941	672.7730	19622.2687	53.0715	4.0636	3.219
	29.1611	111.1241	10598.3117	9.7860	14.8136	715.4460	21475.0528	54.6919	4.2807	3.391
L37	29.1699	109.0233	10416.9732	9.7949	14.8136	703.2046	21107.6119	53.6579	4.3477	3.513
	30.0084	112.2505	11369.6770	10.0849	15.2331	746.3802	23038.0480	55.2463	4.5647	3.689
L38	30.0172	110.0804	11169.6720	10.0938	15.2331	733.2505	22632.7837	54.1782	4.6317	3.82
	30.5622	112.1357	11807.0655	10.2823	15.5058	761.4623	23924.3158	55.1898	4.7728	3.936
L39	30.4122	149.2000	15248.1902	10.1301	15.5058	983.3876	30896.9673	73.4317	3.6338	2.219
	30.4542	149.4135	15313.7473	10.1446	15.5268	986.2813	31029.8038	73.5368	3.6446	2.226
L40	30.4630	147.2622	15119.8973	10.1536	15.5268	973.7964	30637.0112	72.4780	3.7116	2.302
	31.0918	150.4161	16112.2912	10.3710	15.8414	1017.1007	32647.8703	74.0302	3.8744	2.403
L41	31.0565	159.1928	16934.9112	10.3352	15.8414	1069.0292	34314.7213	78.3498	3.6064	2.106
	31.0985	159.4160	17006.2732	10.3497	15.8624	1072.1144	34459.3201	78.4597	3.6173	2.112
L42	31.0985	159.4160	17006.2732	10.3497	15.8624	1072.1144	34459.3201	78.4597	3.6173	2.112
	31.2527	160.2378	17270.6116	10.4031	15.9396	1083.5062	34994.9413	78.8642	3.6572	2.136
L43	31.2527	160.2378	17270.6116	10.4031	15.9396	1083.5062	34994.9413	78.8642	3.6572	2.136
	31.2947	160.4611	17342.9129	10.4176	15.9605	1086.6122	35141.4434	78.9741	3.6681	2.142
L44	31.3211	153.8290	16711.9248	10.4444	15.9605	1047.0779	33862.8905	75.7100	3.8691	2.363
	32.1596	158.0993	18142.6891	10.7344	16.3801	1107.6086	36762.0068	77.8117	4.0861	2.495
L45	32.1684	155.8154	17910.4265	10.7433	16.3801	1093.4290	36291.3799	76.6876	4.1531	2.576
	33.4814	162.4006	20278.5848	11.1973	17.0370	1190.2660	41089.9106	79.9286	4.4930	2.786
L46	32.8300	164.3385	18766.4049	10.7081	16.3777	1145.8542	38025.8241	80.8824	3.9005	2.286
	33.0048	168.9786	20401.3455	11.0104	16.8151	1213.2732	41338.6570	83.1661	4.1268	2.419
L47	33.0225	164.2937	19900.2642	11.0283	16.8151	1183.4737	40323.3306	80.8604	4.2608	2.573
	33.8968	168.7979	21582.2755	11.3307	17.2526	1250.9576	43731.5415	83.0772	4.4872	2.709
L48	33.8968	168.7979	21582.2755	11.3307	17.2526	1250.9576	43731.5415	83.0772	4.4872	2.709
	33.9405	169.0231	21668.7755	11.3458	17.2745	1254.3810	43906.8138	83.1880	4.4985	2.716
L49	33.9405	169.0231	21668.7755	11.3458	17.2745	1254.3810	43906.8138	83.1880	4.4985	2.716
	33.9843	169.2483	21755.5063	11.3609	17.2964	1257.8090	44082.5539	83.2989	4.5098	2.723
L50	34.0019	164.3977	21198.6417	11.3788	17.2964	1225.6135	42954.1952	80.9115	4.6438	2.891
	34.8762	168.7659	22933.7535	11.6811	17.7338	1293.2209	46470.0023	83.0615	4.8701	3.032
L51	34.8939	163.7632	22322.1894	11.6990	17.7338	1258.7352	45230.8077	80.5993	5.0041	3.215
	35.7682	167.9955	24097.9691	12.0014	18.1713	1326.1555	48829.0187	82.6823	5.2305	3.361
L52	35.7770	165.4201	23763.9521	12.0103	18.1713	1307.7739	48152.2097	81.4148	5.2975	3.459

Section	Tip Dia. in	Area in^2	I in^4	r in	C in	I/C in^3	J in^4	It/Q in^2	w in	w/t
	36.2142	167.5023	24672.6405	12.1615	18.3900	1341.6309	49993.4587	82.4395	5.4107	3.533
L53	36.3200	135.8760	20369.2325	12.2689	18.3900	1107.6233	41273.5874	66.8740	6.2147	5.047
	36.3637	136.0434	20444.6216	12.2840	18.4119	1110.4020	41426.3461	66.9564	6.2260	5.056
L54	36.3549	138.7045	20814.1627	12.2751	18.4119	1130.4727	42175.1366	68.2661	6.1590	4.902
	37.1855	141.9501	22309.7354	12.5623	18.8275	1184.9541	45205.5725	69.8635	6.3740	5.074
L55	37.0885	171.6665	26558.9260	12.4639	18.8275	1410.6446	53815.5846	84.4890	5.6370	3.681
	37.1322	171.8747	26655.6823	12.4790	18.8494	1414.1407	54011.6390	84.5915	5.6483	3.689
L56	37.1411	169.1900	26276.9587	12.4879	18.8494	1394.0486	53244.2423	83.2702	5.7153	3.794
	37.5782	171.2381	27242.8521	12.6391	19.0681	1428.7119	55201.4042	84.2782	5.8285	3.869
L57	37.7017	132.7528	21540.9270	12.7644	19.0681	1129.6827	43647.7581	65.3369	6.7665	5.852
	37.7454	132.9100	21617.5524	12.7795	19.0900	1132.4022	43803.0219	65.4143	6.7778	5.862
L58	37.7542	130.1275	21194.6341	12.7885	19.0900	1110.2483	42946.0748	64.0448	6.8448	6.05
	38.2788	131.9734	22109.4460	12.9699	19.3525	1142.4606	44799.7318	64.9533	6.9806	6.17

Tower Elevation ft	Gusset Area (per face) ft^2	Gusset Thickness in	Gusset Grade	Adjust. Factor A_f	Adjust. Factor A_r	Weight Mult.	Double Angle Stitch Bolt Spacing Diagonals in	Double Angle Stitch Bolt Spacing Horizontals in	Double Angle Stitch Bolt Spacing Redundants in
L1 150.0000-145.0000				1	1	1			
L2 145.0000-140.0000				1	1	1			
L3 140.0000-135.0000				1	1	1			
L4 135.0000-130.0000				1	1	1			
L5 130.0000-128.5000				1	1	1			
L6 128.5000-128.2500				1	1	0.866566			
L7 128.2500-123.2500				1	1	0.876544			
L8 123.2500-118.2500				1	1	0.889288			
L9 118.2500-113.2500				1	1	0.886814			
L10 113.2500-109.0000				1	1	0.88856			
L11 109.0000-108.7500				1	1	0.880849			
L12 108.7500-104.1700				1	1	0.892966			
L13 104.1700-103.9200				1	1	0.971053			
L14 103.9200-103.1700				1	1	0.991449			
L15 103.1700-102.9200				1	1	0.982753			

Tower Elevation ft	Gusset Area (per face) ft^2	Gusset Thickness in	Gusset Grade	Adjust. Factor A_f	Adjust. Factor A_r	Weight Mult.	Double Angle Stitch Bolt Spacing Diagonals in	Double Angle Stitch Bolt Spacing Horizontals in	Double Angle Stitch Bolt Spacing Redundants in
L16 102.9200-102.4200				1	1	1.00107			
L17 102.4200-102.1700				1	1	1.07939			
L18 102.1700-100.9200				1	1	1.07222			
L19 100.9200-100.6700				1	1	0.993983			
L20 100.6700-99.5800				1	1	0.988267			
L21 99.5800-99.3300				1	1	0.843197			
L22 99.3300-95.2500				1	1	0.853564			
L23 95.2500-95.0000				1	1	0.82938			
L24 95.0000-90.0000				1	1	0.829373			
L25 90.0000-85.0000				1	1	0.841113			
L26 85.0000-80.5000				1	1	0.857005			
L27 80.5000-80.2500				1	1	0.817668			
L28 80.2500-75.2500				1	1	0.8289			
L29 75.2500-73.5800				1	1	0.838534			
L30 73.5800-73.3300				1	1	0.837582			
L31 73.3300-69.0000				1	1	0.849073			
L32 69.0000-67.0000				1	1	0.852502			
L33 67.0000-66.7500				1	1	0.851548			
L34 66.7500-66.5000				1	1	0.8358			
L35 66.5000-61.5000				1	1	0.846744			
L36 61.5000-56.5000				1	1	0.859921			
L37 56.5000-51.5000				1	1	0.858553			
L38 51.5000-48.2500				1	1	0.864155			
L39 48.2500-48.0000				1	1	0.780428			
L40 48.0000-44.2500				1	1	0.77929			
L41 44.2500-44.0000				1	1	0.782664			
L42 44.0000-43.0800				1	1	0.779586			
L43 43.0800-42.8300				1	1	0.778755			
L44 42.8300-37.8300				1	1	0.795543			
L45 37.8300-30.0000				1	1	0.79478			
L46 30.0000-29.0000				1	1	0.806063			

Tower Elevation ft	Gusset Area (per face) ft^2	Gusset Thickness in	Gusset Grade	Adjust. Factor A_f	Adjust. Factor A_r	Weight Mult.	Double Angle Stitch Bolt Spacing Diagonals in	Double Angle Stitch Bolt Spacing Horizontals in	Double Angle Stitch Bolt Spacing Redundants in
L47 29.0000-24.0000				1	1	0.813472			
L48 24.0000-23.7500				1	1	0.812715			
L49 23.7500-23.5000				1	1	0.81196			
L50 23.5000-18.5000				1	1	0.820828			
L51 18.5000-13.5000				1	1	0.831169			
L52 13.5000-11.0000				1	1	0.836915			
L53 11.0000-10.7500				1	1	1.00049			
L54 10.7500-6.0000				1	1	0.966249			
L55 6.0000-5.7500				1	1	0.774305			
L56 5.7500-3.2500				1	1	0.78041			
L57 3.2500-3.0000				1	1	0.761			
L58 3.0000-0.0000				1	1	0.771424			

Feed Line/Linear Appurtenances - Entered As Round Or Flat

Description	Sector	Exclude From Torque Calculation	Component Type	Placement ft	Total Number	Number Per Row	Start/End Position	Width or Diameter in	Perimeter in	Weight plf
2" flat Climb Ladder Rail *	C	No	Surface Af (CaAa)	150.0000 - 0.0000	1	1	0.000 0.000	2.0000	8.0000	1.65
HB114-21U3M12-XXXF(1-1/4)	B	No	Surface Ar (CaAa)	138.0000 - 0.0000	3	3	0.375 0.497	1.5400		1.22
HB158-21U6S12-60M-01(1-5/8) *	B	No	Surface Ar (CaAa)	138.0000 - 0.0000	1	1	0.492 0.492	1.9900		1.90
AL7-50(1-5/8) *	C	No	Surface Ar (CaAa)	120.0000 - 0.0000	10	5	-0.286 -0.077	1.9600		0.52
LDF7-50A(1-5/8) ***	B	No	Surface Ar (CaAa)	99.0000 - 0.0000	3	2	0.235 0.320	1.9800		0.82
2.5" Solid Rod Reinforcing	C	No	Surface Ar (CaAa)	51.0000 - 0.0000	1	1	0.308 0.308	2.5000		0.00
2.5" Solid Rod Reinforcing	C	No	Surface Ar (CaAa)	51.0000 - 0.0000	1	1	-0.443 -0.443	2.5000		0.00
2.5" Solid Rod Reinforcing	B	No	Surface Ar (CaAa)	51.0000 - 0.0000	1	1	-0.193 -0.193	2.5000		0.00
2.5" Solid Rod Reinforcing *	A	No	Surface Ar (CaAa)	51.0000 - 0.0000	1	1	0.058 0.058	2.5000		0.00
CCI-065125 Reinforcement	A	No	Surface Af (CaAa)	47.0000 - 0.0000	1	1	-0.484 -0.484	0.1000	2.7000	0.00
CCI-065125 Reinforcement	C	No	Surface Af (CaAa)	47.0000 - 0.0000	1	1	-0.234 -0.234	0.1000	2.7000	0.00
CCI-065125 Reinforcement	B	No	Surface Af (CaAa)	47.0000 - 0.0000	1	1	0.016 0.016	0.1000	2.7000	0.00
CCI-065125 Reinforcement	A	No	Surface Af (CaAa)	47.0000 - 0.0000	1	1	0.266 0.266	0.1000	2.7000	0.00
CCI-050125 Reinforcement	A	No	Surface Af (CaAa)	69.0000 - 47.0000	1	1	-0.484 -0.484	0.1000	2.7000	0.00
CCI-050125 Reinforcement	C	No	Surface Af (CaAa)	69.0000 - 47.0000	1	1	-0.234 -0.234	0.1000	2.7000	0.00

Description	Sector	Exclude From Torque Calculation	Component Type	Placement ft	Total Number	Number Per Row	Start/End Position	Width or Diameter in	Perimeter in	Weight plf
CCI-050125 Reinforcement	B	No	Surface Af (CaAa)	69.0000 - 47.0000	1	1	0.016 0.016	0.1000	2.7000	0.00
CCI-050125 Reinforcement	A	No	Surface Af (CaAa)	69.0000 - 47.0000	1	1	0.266 0.266	0.1000	2.7000	0.00
CCI-040125 Reinforcement	C	No	Surface Af (CaAa)	82.0000 - 66.5000	1	1	0.266 0.266	0.1000	2.7000	0.00
CCI-040125 Reinforcement	C	No	Surface Af (CaAa)	82.0000 - 66.5000	1	1	-0.484 -0.484	0.1000	2.7000	0.00
CCI-040125 Reinforcement	B	No	Surface Af (CaAa)	82.0000 - 66.5000	1	1	-0.234 -0.234	0.1000	2.7000	0.00
CCI-040125 Reinforcement	A	No	Surface Af (CaAa)	82.0000 - 66.5000	1	1	0.016 0.016	0.1000	2.7000	0.00
CCI-050125 Reinforcement	A	No	Surface Af (CaAa)	109.5000 - 93.5000	1	1	-0.484 -0.484	0.1000	2.7000	0.00
CCI-050125 Reinforcement	C	No	Surface Af (CaAa)	109.5000 - 93.5000	1	1	-0.234 -0.234	0.1000	2.7000	0.00
CCI-050125 Reinforcement	B	No	Surface Af (CaAa)	100.5000 - 93.5000	1	1	-0.234 -0.234	0.1000	2.7000	0.00
CCI-050125 Reinforcement	B	No	Surface Af (CaAa)	109.5000 - 98.0000	1	1	0.016 0.016	0.1000	2.7000	0.00
CCI-050125 Reinforcement	A	No	Surface Af (CaAa)	109.5000 - 98.0000	1	1	0.266 0.266	0.1000	2.7000	0.00
CCI-040125 Reinforcement	A	No	Surface Af (CaAa)	130.0000 - 110.0000	1	1	-0.484 -0.484	0.1000	2.7000	0.00
CCI-040125 Reinforcement	C	No	Surface Af (CaAa)	130.0000 - 110.0000	1	1	-0.234 -0.234	0.1000	2.7000	0.00
CCI-040125 Reinforcement	B	No	Surface Af (CaAa)	130.0000 - 110.0000	1	1	0.016 0.016	0.1000	2.7000	0.00
CCI-040125 Reinforcement	A	No	Surface Af (CaAa)	130.0000 - 110.0000	1	1	0.266 0.266	0.1000	2.7000	0.00
FP 6 x 2 Reinforcement	A	No	Surface Af (CaAa)	83.2230 - 3.5000	1	1	-0.234 -0.234	0.1000	4.2000	0.00
FP 6 x 2 Reinforcement	A	No	Surface Af (CaAa)	108.6670 - 83.2230	1	1	-0.234 -0.234	1.0295	6.0589	0.00
FP 6 x 2 Reinforcement	C	No	Surface Af (CaAa)	83.2230 - 8.5000	1	1	0.016 0.016	0.1000	4.2000	0.00
FP 6 x 2 Reinforcement	C	No	Surface Af (CaAa)	108.6670 - 83.2230	1	1	0.016 0.016	1.0295	6.0589	0.00
FP 6 x 2 Reinforcement	B	No	Surface Af (CaAa)	83.2230 - 3.5000	1	1	0.266 0.266	0.1000	4.2000	0.00
FP 6 x 2 Reinforcement	B	No	Surface Af (CaAa)	108.6670 - 83.2230	1	1	0.266 0.266	1.0295	6.0589	0.00
FP 6 x 2 Reinforcement	B	No	Surface Af (CaAa)	83.2230 - 8.5000	1	1	-0.484 -0.484	0.1000	4.2000	0.00
FP 6 x 2 Reinforcement	B	No	Surface Af (CaAa)	108.6670 - 83.2230	1	1	-0.484 -0.484	1.0295	6.0589	0.00

Feed Line/Linear Appurtenances - Entered As Area

Description	Face or Leg	Allow Shield	Exclude From Torque Calculation	Component Type	Placement ft	Total Number		C_AA_A ft^2/ft	Weight plf
**********									
FXL-1873(1-5/8)	C	No	No	Inside Pole	150.0000 - 0.0000	12	No Ice	0.0000	0.67
							1/2" Ice	0.0000	0.67
							1" Ice	0.0000	0.67
							2" Ice	0.0000	0.67
FB-L98B-034-XXXXXX(3/8)	C	No	No	Inside Pole	150.0000 - 0.0000	2	No Ice	0.0000	0.05
							1/2" Ice	0.0000	0.05
							1" Ice	0.0000	0.05
							2" Ice	0.0000	0.05
WR-VG86ST-BRD(3/4)	C	No	No	Inside Pole	150.0000 - 0.0000	4	No Ice	0.0000	0.58
							1/2" Ice	0.0000	0.58
							1" Ice	0.0000	0.58
							2" Ice	0.0000	0.58

Description	Face or Leg	Allow Shield	Exclude From Torque Calculation	Component Type	Placement ft	Total Number		C_AA_A ft^2/ft	Weight plf
2" (Nominal) Conduit	C	No	No	Inside Pole	150.0000 - 0.0000	2	No Ice	0.0000	0.72
							1/2" Ice	0.0000	0.72
							1" Ice	0.0000	0.72
							2" Ice	0.0000	0.72
EC4-50(1/2")	C	No	No	Inside Pole	138.0000 - 0.0000	2	No Ice	0.0000	0.16
							1/2" Ice	0.0000	0.16
							1" Ice	0.0000	0.16
							2" Ice	0.0000	0.16
LDF7-50A(1-5/8)	C	No	No	Inside Pole	99.0000 - 0.0000	3	No Ice	0.0000	0.82
							1/2" Ice	0.0000	0.82
							1" Ice	0.0000	0.82
							2" Ice	0.0000	0.82
HB114-U6S12-XXX-LI(1-1/4)	C	No	No	Inside Pole	99.0000 - 0.0000	1	No Ice	0.0000	1.70
							1/2" Ice	0.0000	1.70
							1" Ice	0.0000	1.70
							2" Ice	0.0000	1.70

Feed Line/Linear Appurtenances Section Areas

Tower Section	Tower Elevation ft	Face	A_R ft^2	A_F ft^2	C_AA_A In Face ft^2	C_AA_A Out Face ft^2	Weight K
L1	150.0000-145.0000	A	0.000	0.000	0.000	0.000	0.00
		B	0.000	0.000	0.000	0.000	0.00
		C	0.000	0.000	1.667	0.000	0.07
L2	145.0000-140.0000	A	0.000	0.000	0.000	0.000	0.00
		B	0.000	0.000	0.000	0.000	0.00
		C	0.000	0.000	1.667	0.000	0.07
L3	140.0000-135.0000	A	0.000	0.000	0.000	0.000	0.00
		B	0.000	0.000	1.983	0.000	0.02
		C	0.000	0.000	1.667	0.000	0.07
L4	135.0000-130.0000	A	0.000	0.000	0.000	0.000	0.00
		B	0.000	0.000	3.305	0.000	0.03
		C	0.000	0.000	1.667	0.000	0.07
L5	130.0000-128.5000	A	0.000	0.000	0.050	0.000	0.00
		B	0.000	0.000	1.017	0.000	0.01
		C	0.000	0.000	0.525	0.000	0.02
L6	128.5000-128.2500	A	0.000	0.000	0.008	0.000	0.00
		B	0.000	0.000	0.169	0.000	0.00
		C	0.000	0.000	0.087	0.000	0.00
L7	128.2500-123.2500	A	0.000	0.000	0.167	0.000	0.00
		B	0.000	0.000	3.388	0.000	0.03
		C	0.000	0.000	1.750	0.000	0.07
L8	123.2500-118.2500	A	0.000	0.000	0.167	0.000	0.00
		B	0.000	0.000	3.388	0.000	0.03
		C	0.000	0.000	3.465	0.000	0.08
L9	118.2500-113.2500	A	0.000	0.000	0.167	0.000	0.00
		B	0.000	0.000	3.388	0.000	0.03
		C	0.000	0.000	6.650	0.000	0.10
L10	113.2500-109.0000	A	0.000	0.000	0.125	0.000	0.00
		B	0.000	0.000	2.872	0.000	0.02
		C	0.000	0.000	5.644	0.000	0.08
L11	109.0000-108.7500	A	0.000	0.000	0.008	0.000	0.00
		B	0.000	0.000	0.169	0.000	0.00
		C	0.000	0.000	0.333	0.000	0.00
L12	108.7500-104.1700	A	0.000	0.000	0.924	0.000	0.00
		B	0.000	0.000	4.647	0.000	0.03
		C	0.000	0.000	6.863	0.000	0.09
L13	104.1700-103.9200	A	0.000	0.000	0.051	0.000	0.00
		B	0.000	0.000	0.255	0.000	0.00
		C	0.000	0.000	0.375	0.000	0.00
L14	103.9200-103.1700	A	0.000	0.000	0.154	0.000	0.00
		B	0.000	0.000	0.766	0.000	0.00
		C	0.000	0.000	1.126	0.000	0.01
L15	103.1700-102.9200	A	0.000	0.000	0.051	0.000	0.00
		B	0.000	0.000	0.255	0.000	0.00
		C	0.000	0.000	0.375	0.000	0.00

Tower Section	Tower Elevation ft	Face	A_R ft^2	A_F ft^2	C_AA_A In Face ft^2	C_AA_A Out Face ft^2	Weight K
L16	102.9200-102.4200	A	0.000	0.000	0.102	0.000	0.00
		B	0.000	0.000	0.510	0.000	0.00
		C	0.000	0.000	0.751	0.000	0.01
L17	102.4200-102.1700	A	0.000	0.000	0.051	0.000	0.00
		B	0.000	0.000	0.255	0.000	0.00
		C	0.000	0.000	0.375	0.000	0.00
L18	102.1700-100.9200	A	0.000	0.000	0.256	0.000	0.00
		B	0.000	0.000	1.276	0.000	0.01
		C	0.000	0.000	1.877	0.000	0.02
L19	100.9200-100.6700	A	0.000	0.000	0.051	0.000	0.00
		B	0.000	0.000	0.255	0.000	0.00
		C	0.000	0.000	0.375	0.000	0.00
L20	100.6700-99.5800	A	0.000	0.000	0.223	0.000	0.00
		B	0.000	0.000	1.128	0.000	0.01
		C	0.000	0.000	1.637	0.000	0.02
L21	99.5800-99.3300	A	0.000	0.000	0.051	0.000	0.00
		B	0.000	0.000	0.259	0.000	0.00
		C	0.000	0.000	0.375	0.000	0.00
L22	99.3300-95.2500	A	0.000	0.000	0.790	0.000	0.00
		B	0.000	0.000	5.672	0.000	0.03
		C	0.000	0.000	6.126	0.000	0.09
L23	95.2500-95.0000	A	0.000	0.000	0.047	0.000	0.00
		B	0.000	0.000	0.354	0.000	0.00
		C	0.000	0.000	0.375	0.000	0.01
L24	95.0000-90.0000	A	0.000	0.000	0.883	0.000	0.00
		B	0.000	0.000	7.026	0.000	0.04
		C	0.000	0.000	7.450	0.000	0.12
L25	90.0000-85.0000	A	0.000	0.000	0.858	0.000	0.00
		B	0.000	0.000	7.001	0.000	0.04
		C	0.000	0.000	7.425	0.000	0.12
L26	85.0000-80.5000	A	0.000	0.000	0.375	0.000	0.00
		B	0.000	0.000	5.482	0.000	0.04
		C	0.000	0.000	6.310	0.000	0.10
L27	80.5000-80.2500	A	0.000	0.000	0.008	0.000	0.00
		B	0.000	0.000	0.277	0.000	0.00
		C	0.000	0.000	0.341	0.000	0.01
L28	80.2500-75.2500	A	0.000	0.000	0.167	0.000	0.00
		B	0.000	0.000	5.535	0.000	0.04
		C	0.000	0.000	6.817	0.000	0.12
L29	75.2500-73.5800	A	0.000	0.000	0.056	0.000	0.00
		B	0.000	0.000	1.849	0.000	0.01
		C	0.000	0.000	2.277	0.000	0.04
L30	73.5800-73.3300	A	0.000	0.000	0.008	0.000	0.00
		B	0.000	0.000	0.277	0.000	0.00
		C	0.000	0.000	0.341	0.000	0.01
L31	73.3300-69.0000	A	0.000	0.000	0.144	0.000	0.00
		B	0.000	0.000	4.793	0.000	0.03
		C	0.000	0.000	5.903	0.000	0.10
L32	69.0000-67.0000	A	0.000	0.000	0.133	0.000	0.00
		B	0.000	0.000	2.247	0.000	0.02
		C	0.000	0.000	2.760	0.000	0.05
L33	67.0000-66.7500	A	0.000	0.000	0.017	0.000	0.00
		B	0.000	0.000	0.281	0.000	0.00
		C	0.000	0.000	0.345	0.000	0.01
L34	66.7500-66.5000	A	0.000	0.000	0.017	0.000	0.00
		B	0.000	0.000	0.281	0.000	0.00
		C	0.000	0.000	0.345	0.000	0.01
L35	66.5000-61.5000	A	0.000	0.000	0.250	0.000	0.00
		B	0.000	0.000	5.535	0.000	0.04
		C	0.000	0.000	6.733	0.000	0.12
L36	61.5000-56.5000	A	0.000	0.000	0.250	0.000	0.00
		B	0.000	0.000	5.535	0.000	0.04
		C	0.000	0.000	6.733	0.000	0.12
L37	56.5000-51.5000	A	0.000	0.000	0.250	0.000	0.00
		B	0.000	0.000	5.535	0.000	0.04
		C	0.000	0.000	6.733	0.000	0.12
L38	51.5000-48.2500	A	0.000	0.000	0.850	0.000	0.00
		B	0.000	0.000	4.285	0.000	0.03
		C	0.000	0.000	5.752	0.000	0.08

Tower Section	Tower Elevation ft	Face	A_R ft^2	A_F ft^2	C_AA_A In Face ft^2	C_AA_A Out Face ft^2	Weight K
L39	48.2500-48.0000	A	0.000	0.000	0.075	0.000	0.00
		B	0.000	0.000	0.339	0.000	0.00
		C	0.000	0.000	0.462	0.000	0.01
L40	48.0000-44.2500	A	0.000	0.000	1.125	0.000	0.00
		B	0.000	0.000	5.089	0.000	0.03
		C	0.000	0.000	6.925	0.000	0.09
L41	44.2500-44.0000	A	0.000	0.000	0.075	0.000	0.00
		B	0.000	0.000	0.339	0.000	0.00
		C	0.000	0.000	0.462	0.000	0.01
L42	44.0000-43.0800	A	0.000	0.000	0.276	0.000	0.00
		B	0.000	0.000	1.248	0.000	0.01
		C	0.000	0.000	1.699	0.000	0.02
L43	43.0800-42.8300	A	0.000	0.000	0.075	0.000	0.00
		B	0.000	0.000	0.339	0.000	0.00
		C	0.000	0.000	0.462	0.000	0.01
L44	42.8300-37.8300	A	0.000	0.000	1.500	0.000	0.00
		B	0.000	0.000	6.785	0.000	0.04
		C	0.000	0.000	9.233	0.000	0.12
L45	37.8300-30.0000	A	0.000	0.000	2.349	0.000	0.00
		B	0.000	0.000	10.625	0.000	0.06
		C	0.000	0.000	14.459	0.000	0.18
L46	30.0000-29.0000	A	0.000	0.000	0.300	0.000	0.00
		B	0.000	0.000	1.357	0.000	0.01
		C	0.000	0.000	1.847	0.000	0.02
L47	29.0000-24.0000	A	0.000	0.000	1.500	0.000	0.00
		B	0.000	0.000	6.785	0.000	0.04
		C	0.000	0.000	9.233	0.000	0.12
L48	24.0000-23.7500	A	0.000	0.000	0.075	0.000	0.00
		B	0.000	0.000	0.339	0.000	0.00
		C	0.000	0.000	0.462	0.000	0.01
L49	23.7500-23.5000	A	0.000	0.000	0.075	0.000	0.00
		B	0.000	0.000	0.339	0.000	0.00
		C	0.000	0.000	0.462	0.000	0.01
L50	23.5000-18.5000	A	0.000	0.000	1.500	0.000	0.00
		B	0.000	0.000	6.785	0.000	0.04
		C	0.000	0.000	9.233	0.000	0.12
L51	18.5000-13.5000	A	0.000	0.000	1.500	0.000	0.00
		B	0.000	0.000	6.785	0.000	0.04
		C	0.000	0.000	9.233	0.000	0.12
L52	13.5000-11.0000	A	0.000	0.000	0.750	0.000	0.00
		B	0.000	0.000	3.393	0.000	0.02
		C	0.000	0.000	4.617	0.000	0.06
L53	11.0000-10.7500	A	0.000	0.000	0.075	0.000	0.00
		B	0.000	0.000	0.339	0.000	0.00
		C	0.000	0.000	0.462	0.000	0.01
L54	10.7500-6.0000	A	0.000	0.000	1.425	0.000	0.00
		B	0.000	0.000	6.404	0.000	0.04
		C	0.000	0.000	8.730	0.000	0.11
L55	6.0000-5.7500	A	0.000	0.000	0.075	0.000	0.00
		B	0.000	0.000	0.335	0.000	0.00
		C	0.000	0.000	0.457	0.000	0.01
L56	5.7500-3.2500	A	0.000	0.000	0.746	0.000	0.00
		B	0.000	0.000	3.347	0.000	0.02
		C	0.000	0.000	4.575	0.000	0.06
L57	3.2500-3.0000	A	0.000	0.000	0.071	0.000	0.00
		B	0.000	0.000	0.331	0.000	0.00
		C	0.000	0.000	0.457	0.000	0.01
L58	3.0000-0.0000	A	0.000	0.000	0.850	0.000	0.00
		B	0.000	0.000	3.971	0.000	0.02
		C	0.000	0.000	5.490	0.000	0.07

Feed Line/Linear Appurtenances Section Areas - With Ice

Tower Section	Tower Elevation ft	Face or Leg	Ice Thickness in	A_R ft^2	A_F ft^2	C_AA_A In Face ft^2	C_AA_A Out Face ft^2	Weight K
L1	150.0000-145.0000	A	1.481	0.000	0.000	0.000	0.000	0.00
		B		0.000	0.000	0.000	0.000	0.00

Tower Section	Tower Elevation ft	Face or Leg	Ice Thickness in	A_R ft^2	A_F ft^2	C_AA_A In Face ft^2	C_AA_A Out Face ft^2	Weight K
		C		0.000	0.000	3.148	0.000	0.11
L2	145.0000-140.0000	A	1.476	0.000	0.000	0.000	0.000	0.00
		B		0.000	0.000	0.000	0.000	0.00
		C		0.000	0.000	3.142	0.000	0.11
L3	140.0000-135.0000	A	1.471	0.000	0.000	0.000	0.000	0.00
		B		0.000	0.000	4.315	0.000	0.06
		C		0.000	0.000	3.137	0.000	0.11
L4	135.0000-130.0000	A	1.465	0.000	0.000	0.000	0.000	0.00
		B		0.000	0.000	7.179	0.000	0.11
		C		0.000	0.000	3.132	0.000	0.11
L5	130.0000-128.5000	A	1.462	0.000	0.000	0.927	0.000	0.01
		B		0.000	0.000	2.615	0.000	0.04
		C		0.000	0.000	1.402	0.000	0.04
L6	128.5000-128.2500	A	1.461	0.000	0.000	0.154	0.000	0.00
		B		0.000	0.000	0.436	0.000	0.01
		C		0.000	0.000	0.234	0.000	0.01
L7	128.2500-123.2500	A	1.457	0.000	0.000	3.082	0.000	0.05
		B		0.000	0.000	8.703	0.000	0.13
		C		0.000	0.000	4.665	0.000	0.13
L8	123.2500-118.2500	A	1.452	0.000	0.000	3.070	0.000	0.05
		B		0.000	0.000	8.683	0.000	0.13
		C		0.000	0.000	7.432	0.000	0.17
L9	118.2500-113.2500	A	1.445	0.000	0.000	3.058	0.000	0.05
		B		0.000	0.000	8.664	0.000	0.13
		C		0.000	0.000	12.573	0.000	0.26
L10	113.2500-109.0000	A	1.440	0.000	0.000	2.284	0.000	0.03
		B		0.000	0.000	7.196	0.000	0.10
		C		0.000	0.000	10.518	0.000	0.21
L11	109.0000-108.7500	A	1.437	0.000	0.000	0.152	0.000	0.00
		B		0.000	0.000	0.432	0.000	0.01
		C		0.000	0.000	0.627	0.000	0.01
L12	108.7500-104.1700	A	1.433	0.000	0.000	4.839	0.000	0.07
		B		0.000	0.000	12.022	0.000	0.17
		C		0.000	0.000	13.542	0.000	0.26
L13	104.1700-103.9200	A	1.430	0.000	0.000	0.266	0.000	0.00
		B		0.000	0.000	0.659	0.000	0.01
		C		0.000	0.000	0.741	0.000	0.01
L14	103.9200-103.1700	A	1.429	0.000	0.000	0.797	0.000	0.01
		B		0.000	0.000	1.978	0.000	0.03
		C		0.000	0.000	2.221	0.000	0.04
L15	103.1700-102.9200	A	1.429	0.000	0.000	0.266	0.000	0.00
		B		0.000	0.000	0.659	0.000	0.01
		C		0.000	0.000	0.740	0.000	0.01
L16	102.9200-102.4200	A	1.428	0.000	0.000	0.531	0.000	0.01
		B		0.000	0.000	1.318	0.000	0.02
		C		0.000	0.000	1.480	0.000	0.03
L17	102.4200-102.1700	A	1.428	0.000	0.000	0.265	0.000	0.00
		B		0.000	0.000	0.659	0.000	0.01
		C		0.000	0.000	0.740	0.000	0.01
L18	102.1700-100.9200	A	1.427	0.000	0.000	1.326	0.000	0.02
		B		0.000	0.000	3.293	0.000	0.05
		C		0.000	0.000	3.699	0.000	0.07
L19	100.9200-100.6700	A	1.426	0.000	0.000	0.265	0.000	0.00
		B		0.000	0.000	0.658	0.000	0.01
		C		0.000	0.000	0.740	0.000	0.01
L20	100.6700-99.5800	A	1.425	0.000	0.000	1.155	0.000	0.02
		B		0.000	0.000	3.128	0.000	0.05
		C		0.000	0.000	3.224	0.000	0.06
L21	99.5800-99.3300	A	1.424	0.000	0.000	0.265	0.000	0.00
		B		0.000	0.000	0.728	0.000	0.01
		C		0.000	0.000	0.739	0.000	0.01
L22	99.3300-95.2500	A	1.421	0.000	0.000	3.486	0.000	0.05
		B		0.000	0.000	14.229	0.000	0.21
		C		0.000	0.000	12.053	0.000	0.25
L23	95.2500-95.0000	A	1.417	0.000	0.000	0.189	0.000	0.00
		B		0.000	0.000	0.864	0.000	0.01
		C		0.000	0.000	0.738	0.000	0.02
L24	95.0000-90.0000	A	1.413	0.000	0.000	2.720	0.000	0.04
		B		0.000	0.000	16.267	0.000	0.24

Tower Section	Tower Elevation ft	Face or Leg	Ice Thickness in	A_R ft^2	A_F ft^2	C_AA_A In Face ft^2	C_AA_A Out Face ft^2	Weight K
		C		0.000	0.000	13.692	0.000	0.29
L25	90.0000-85.0000	A	1.406	0.000	0.000	2.263	0.000	0.03
		B		0.000	0.000	15.804	0.000	0.23
		C		0.000	0.000	13.218	0.000	0.28
L26	85.0000-80.5000	A	1.398	0.000	0.000	2.053	0.000	0.03
		B		0.000	0.000	13.786	0.000	0.20
		C		0.000	0.000	12.340	0.000	0.26
L27	80.5000-80.2500	A	1.394	0.000	0.000	0.148	0.000	0.00
		B		0.000	0.000	0.783	0.000	0.01
		C		0.000	0.000	0.768	0.000	0.02
L28	80.2500-75.2500	A	1.389	0.000	0.000	2.945	0.000	0.05
		B		0.000	0.000	15.636	0.000	0.24
		C		0.000	0.000	15.334	0.000	0.32
L29	75.2500-73.5800	A	1.383	0.000	0.000	0.980	0.000	0.02
		B		0.000	0.000	5.209	0.000	0.08
		C		0.000	0.000	5.111	0.000	0.11
L30	73.5800-73.3300	A	1.381	0.000	0.000	0.146	0.000	0.00
		B		0.000	0.000	0.779	0.000	0.01
		C		0.000	0.000	0.765	0.000	0.02
L31	73.3300-69.0000	A	1.377	0.000	0.000	2.529	0.000	0.04
		B		0.000	0.000	13.472	0.000	0.20
		C		0.000	0.000	13.224	0.000	0.27
L32	69.0000-67.0000	A	1.371	0.000	0.000	2.336	0.000	0.04
		B		0.000	0.000	6.807	0.000	0.10
		C		0.000	0.000	6.692	0.000	0.13
L33	67.0000-66.7500	A	1.368	0.000	0.000	0.290	0.000	0.00
		B		0.000	0.000	0.848	0.000	0.01
		C		0.000	0.000	0.834	0.000	0.02
L34	66.7500-66.5000	A	1.368	0.000	0.000	0.290	0.000	0.00
		B		0.000	0.000	0.847	0.000	0.01
		C		0.000	0.000	0.834	0.000	0.02
L35	66.5000-61.5000	A	1.362	0.000	0.000	4.337	0.000	0.07
		B		0.000	0.000	15.462	0.000	0.23
		C		0.000	0.000	13.748	0.000	0.29
L36	61.5000-56.5000	A	1.351	0.000	0.000	4.304	0.000	0.07
		B		0.000	0.000	15.391	0.000	0.23
		C		0.000	0.000	13.701	0.000	0.29
L37	56.5000-51.5000	A	1.339	0.000	0.000	4.268	0.000	0.06
		B		0.000	0.000	15.313	0.000	0.23
		C		0.000	0.000	13.651	0.000	0.29
L38	51.5000-48.2500	A	1.329	0.000	0.000	4.172	0.000	0.06
		B		0.000	0.000	11.327	0.000	0.16
		C		0.000	0.000	11.680	0.000	0.22
L39	48.2500-48.0000	A	1.324	0.000	0.000	0.340	0.000	0.00
		B		0.000	0.000	0.889	0.000	0.01
		C		0.000	0.000	0.937	0.000	0.02
L40	48.0000-44.2500	A	1.318	0.000	0.000	5.080	0.000	0.07
		B		0.000	0.000	13.309	0.000	0.19
		C		0.000	0.000	14.024	0.000	0.26
L41	44.2500-44.0000	A	1.313	0.000	0.000	0.338	0.000	0.00
		B		0.000	0.000	0.885	0.000	0.01
		C		0.000	0.000	0.933	0.000	0.02
L42	44.0000-43.0800	A	1.311	0.000	0.000	1.241	0.000	0.02
		B		0.000	0.000	3.255	0.000	0.05
		C		0.000	0.000	3.432	0.000	0.06
L43	43.0800-42.8300	A	1.309	0.000	0.000	0.337	0.000	0.00
		B		0.000	0.000	0.884	0.000	0.01
		C		0.000	0.000	0.932	0.000	0.02
L44	42.8300-37.8300	A	1.301	0.000	0.000	6.703	0.000	0.09
		B		0.000	0.000	17.613	0.000	0.25
		C		0.000	0.000	18.588	0.000	0.34
L45	37.8300-30.0000	A	1.278	0.000	0.000	10.357	0.000	0.14
		B		0.000	0.000	27.320	0.000	0.38
		C		0.000	0.000	28.890	0.000	0.53
L46	30.0000-29.0000	A	1.261	0.000	0.000	1.323	0.000	0.02
		B		0.000	0.000	3.489	0.000	0.05
		C		0.000	0.000	3.690	0.000	0.07
L47	29.0000-24.0000	A	1.247	0.000	0.000	6.489	0.000	0.09
		B		0.000	0.000	17.212	0.000	0.24

Tower Section	Tower Elevation ft	Face or Leg	Ice Thickness in	A_R ft^2	A_F ft^2	C_AA_A In Face ft^2	C_AA_A Out Face ft^2	Weight K
		C		0.000	0.000	18.254	0.000	0.33
L48	24.0000-23.7500	A	1.234	0.000	0.000	0.322	0.000	0.00
		B		0.000	0.000	0.856	0.000	0.01
		C		0.000	0.000	0.909	0.000	0.02
L49	23.7500-23.5000	A	1.233	0.000	0.000	0.322	0.000	0.00
		B		0.000	0.000	0.855	0.000	0.01
		C		0.000	0.000	0.908	0.000	0.02
L50	23.5000-18.5000	A	1.219	0.000	0.000	6.374	0.000	0.08
		B		0.000	0.000	16.997	0.000	0.23
		C		0.000	0.000	18.075	0.000	0.32
L51	18.5000-13.5000	A	1.186	0.000	0.000	6.244	0.000	0.08
		B		0.000	0.000	16.752	0.000	0.22
		C		0.000	0.000	17.870	0.000	0.32
L52	13.5000-11.0000	A	1.155	0.000	0.000	3.059	0.000	0.04
		B		0.000	0.000	8.259	0.000	0.11
		C		0.000	0.000	8.838	0.000	0.16
L53	11.0000-10.7500	A	1.141	0.000	0.000	0.303	0.000	0.00
		B		0.000	0.000	0.821	0.000	0.01
		C		0.000	0.000	0.879	0.000	0.02
L54	10.7500-6.0000	A	1.112	0.000	0.000	5.649	0.000	0.07
		B		0.000	0.000	14.787	0.000	0.19
		C		0.000	0.000	15.938	0.000	0.28
L55	6.0000-5.7500	A	1.073	0.000	0.000	0.290	0.000	0.00
		B		0.000	0.000	0.737	0.000	0.01
		C		0.000	0.000	0.800	0.000	0.01
L56	5.7500-3.2500	A	1.045	0.000	0.000	2.783	0.000	0.03
		B		0.000	0.000	7.226	0.000	0.09
		C		0.000	0.000	7.930	0.000	0.14
L57	3.2500-3.0000	A	1.007	0.000	0.000	0.222	0.000	0.00
		B		0.000	0.000	0.662	0.000	0.01
		C		0.000	0.000	0.783	0.000	0.01
L58	3.0000-0.0000	A	0.936	0.000	0.000	2.534	0.000	0.03
		B		0.000	0.000	7.703	0.000	0.09
		C		0.000	0.000	9.173	0.000	0.15

Feed Line Center of Pressure

Section	Elevation ft	CP_X in	CP_Z in	CP_X Ice in	CP_Z Ice in
L1	150.0000-145.0000	0.0000	1.8242	0.0000	2.1788
L2	145.0000-140.0000	0.0000	1.8318	0.0000	2.2022
L3	140.0000-135.0000	1.5998	2.2162	1.8964	2.4019
L4	135.0000-130.0000	2.3825	2.4213	2.6556	2.5144
L5	130.0000-128.5000	2.4199	2.4015	2.7661	2.2148
L6	128.5000-128.2500	2.4377	2.4189	2.7854	2.2301
L7	128.2500-123.2500	2.4538	2.4344	2.8207	2.2577
L8	123.2500-118.2500	2.6991	3.4370	2.9153	2.9316
L9	118.2500-113.2500	3.0274	4.7975	3.0187	3.8501
L10	113.2500-109.0000	3.0708	4.8720	3.0772	3.9814
L11	109.0000-108.7500	3.0961	4.9007	3.1186	3.9734
L12	108.7500-104.1700	2.0207	4.1526	2.1165	3.7651
L13	104.1700-103.9200	2.0272	4.1872	2.1273	3.8088
L14	103.9200-103.1700	2.0298	4.1927	2.1322	3.8176

Section	Elevation ft	CP_X in	CP_Z in	CP_X Ice in	CP_Z Ice in
L15	103.1700-102.9200	2.0353	4.2042	2.1385	3.8289
L16	102.9200-102.4200	2.0372	4.2081	2.1421	3.8354
L17	102.4200-102.1700	2.0369	4.2076	2.1445	3.8399
L18	102.1700-100.9200	2.0413	4.2168	2.1520	3.8534
L19	100.9200-100.6700	2.0467	4.2283	2.1601	3.8680
L20	100.6700-99.5800	2.0499	4.1888	2.1583	3.5066
L21	99.5800-99.3300	2.0591	4.1992	2.1661	3.4547
L22	99.3300-95.2500	2.8188	4.0476	2.7285	3.5908
L23	95.2500-95.0000	2.8877	4.0734	2.7618	3.8126
L24	95.0000-90.0000	2.9123	4.1075	2.8183	3.8504
L25	90.0000-85.0000	2.9528	4.1662	2.8891	3.9311
L26	85.0000-80.5000	3.4161	4.2676	3.0136	3.7377
L27	80.5000-80.2500	3.7271	4.2883	2.9002	3.2323
L28	80.2500-75.2500	3.7477	4.3117	2.9307	3.2667
L29	75.2500-73.5800	3.7744	4.3420	2.9696	3.3105
L30	73.5800-73.3300	3.7822	4.3509	2.9808	3.3231
L31	73.3300-69.0000	3.7999	4.3710	3.0072	3.3529
L32	69.0000-67.0000	3.8117	4.3363	3.1493	3.1721
L33	67.0000-66.7500	3.8215	4.3473	3.1660	3.1900
L34	66.7500-66.5000	3.8262	4.3526	3.1703	3.1944
L35	66.5000-61.5000	3.9097	4.4910	3.6388	4.0307
L36	61.5000-56.5000	3.9503	4.5371	3.7100	4.1102
L37	56.5000-51.5000	3.9903	4.5824	3.7804	4.1889
L38	51.5000-48.2500	3.4886	4.0060	3.3354	3.6963
L39	48.2500-48.0000	3.4286	3.9369	3.2835	3.6388
L40	48.0000-44.2500	3.4442	3.9547	3.3082	3.6665
L41	44.2500-44.0000	3.4621	3.9750	3.3340	3.6952
L42	44.0000-43.0800	3.4667	3.9803	3.3413	3.7034
L43	43.0800-42.8300	3.4713	3.9855	3.3485	3.7114
L44	42.8300-37.8300	3.4905	4.0074	3.3803	3.7469
L45	37.8300-30.0000	3.5393	4.0629	3.4585	3.8342
L46	30.0000-29.0000	3.5467	4.0713	3.4681	3.8450
L47	29.0000-24.0000	3.5691	4.0968	3.5074	3.8889
L48	24.0000-23.7500	3.5892	4.1197	3.5403	3.9256
L49	23.7500-23.5000	3.5911	4.1219	3.5434	3.9291
L50	23.5000-18.5000	3.6101	4.1434	3.5757	3.9652
L51	18.5000-13.5000	3.6462	4.1846	3.6374	4.0341
L52	13.5000-11.0000	3.6730	4.2150	3.6836	4.0857
L53	11.0000-10.7500	3.6774	4.2200	3.6977	4.1015
L54	10.7500-6.0000	3.7268	4.2518	3.9745	4.2219
L55	6.0000-5.7500	3.7776	4.2876	4.2304	4.3376
L56	5.7500-3.2500	3.7887	4.2956	4.2588	4.3379
L57	3.2500-3.0000	4.0796	4.5829	4.4132	4.1941
L58	3.0000-0.0000	4.0979	4.6033	4.4119	4.2211

Note: For pole sections, center of pressure calculations do not consider feed line shielding.

Shielding Factor Ka

Tower Section	Feed Line Record No.	Description	Feed Line Segment Elev.	K_a No Ice	K_a Ice
L1	1	2" flat Climb Ladder Rail	145.00 - 150.00	1.0000	1.0000
L2	1	2" flat Climb Ladder Rail	140.00 - 145.00	1.0000	1.0000
L3	1	2" flat Climb Ladder Rail	135.00 - 140.00	1.0000	1.0000
L3	8	HB114-21U3M12-XXXF(1-1/4)	135.00 - 138.00	1.0000	1.0000
L3	9	HB158-21U6S12-60M-01(1-5/8)	135.00 - 138.00	1.0000	1.0000

Tower Section	Feed Line Record No.	Description	Feed Line Segment Elev.	K_a No Ice	K_a Ice
L4	1	2" flat Climb Ladder Rail	130.00 - 135.00	1.0000	1.0000
L4	8	HB114-21U3M12-XXXF(1-1/4)	130.00 - 135.00	1.0000	1.0000
L4	9	HB158-21U6S12-60M-01(1-5/8)	130.00 - 135.00	1.0000	1.0000
L5	1	2" flat Climb Ladder Rail	128.50 - 130.00	1.0000	1.0000
L5	8	HB114-21U3M12-XXXF(1-1/4)	128.50 - 130.00	1.0000	1.0000
L5	9	HB158-21U6S12-60M-01(1-5/8)	128.50 - 130.00	1.0000	1.0000
L5	41	CCI-040125 Reinforcement	128.50 - 130.00	1.0000	1.0000
L5	42	CCI-040125 Reinforcement	128.50 - 130.00	1.0000	1.0000
L5	43	CCI-040125 Reinforcement	128.50 - 130.00	1.0000	1.0000
L5	44	CCI-040125 Reinforcement	128.50 - 130.00	1.0000	1.0000
L6	1	2" flat Climb Ladder Rail	128.25 - 128.50	1.0000	1.0000
L6	8	HB114-21U3M12-XXXF(1-1/4)	128.25 - 128.50	1.0000	1.0000
L6	9	HB158-21U6S12-60M-01(1-5/8)	128.25 - 128.50	1.0000	1.0000
L6	41	CCI-040125 Reinforcement	128.25 - 128.50	1.0000	1.0000
L6	42	CCI-040125 Reinforcement	128.25 - 128.50	1.0000	1.0000
L6	43	CCI-040125 Reinforcement	128.25 - 128.50	1.0000	1.0000
L6	44	CCI-040125 Reinforcement	128.25 - 128.50	1.0000	1.0000
L7	1	2" flat Climb Ladder Rail	123.25 - 128.25	1.0000	1.0000
L7	8	HB114-21U3M12-XXXF(1-1/4)	123.25 - 128.25	1.0000	1.0000
L7	9	HB158-21U6S12-60M-01(1-5/8)	123.25 - 128.25	1.0000	1.0000
L7	41	CCI-040125 Reinforcement	123.25 - 128.25	1.0000	1.0000
L7	42	CCI-040125 Reinforcement	123.25 - 128.25	1.0000	1.0000
L7	43	CCI-040125 Reinforcement	123.25 - 128.25	1.0000	1.0000
L7	44	CCI-040125 Reinforcement	123.25 - 128.25	1.0000	1.0000
L8	1	2" flat Climb Ladder Rail	118.25 - 123.25	1.0000	1.0000
L8	8	HB114-21U3M12-XXXF(1-1/4)	118.25 - 123.25	1.0000	1.0000
L8	9	HB158-21U6S12-60M-01(1-5/8)	118.25 - 123.25	1.0000	1.0000
L8	12	AL7-50(1-5/8)	118.25 - 120.00	1.0000	1.0000
L8	41	CCI-040125 Reinforcement	118.25 - 123.25	1.0000	1.0000
L8	42	CCI-040125 Reinforcement	118.25 - 123.25	1.0000	1.0000
L8	43	CCI-040125 Reinforcement	118.25 - 123.25	1.0000	1.0000
L8	44	CCI-040125 Reinforcement	118.25 - 123.25	1.0000	1.0000
L9	1	2" flat Climb Ladder Rail	113.25 - 118.25	1.0000	1.0000
L9	8	HB114-21U3M12-XXXF(1-1/4)	113.25 - 118.25	1.0000	1.0000

Tower Section	Feed Line Record No.	Description	Feed Line Segment Elev.	K_a No Ice	K_a Ice
L9	9	HB158-21U6S12-60M-01(1-5/8)	113.25 - 118.25	1.0000	1.0000
L9	12	AL7-50(1-5/8)	113.25 - 118.25	1.0000	1.0000
L9	41	CCI-040125 Reinforcement	113.25 - 118.25	1.0000	1.0000
L9	42	CCI-040125 Reinforcement	113.25 - 118.25	1.0000	1.0000
L9	43	CCI-040125 Reinforcement	113.25 - 118.25	1.0000	1.0000
L9	44	CCI-040125 Reinforcement	113.25 - 118.25	1.0000	1.0000
L10	1	2" flat Climb Ladder Rail	109.00 - 113.25	1.0000	1.0000
L10	8	HB114-21U3M12-XXXF(1-1/4)	109.00 - 113.25	1.0000	1.0000
L10	9	HB158-21U6S12-60M-01(1-5/8)	109.00 - 113.25	1.0000	1.0000
L10	12	AL7-50(1-5/8)	109.00 - 113.25	1.0000	1.0000
L10	36	CCI-050125 Reinforcement	109.00 - 109.50	1.0000	1.0000
L10	37	CCI-050125 Reinforcement	109.00 - 109.50	1.0000	1.0000
L10	39	CCI-050125 Reinforcement	109.00 - 109.50	1.0000	1.0000
L10	40	CCI-050125 Reinforcement	109.00 - 109.50	1.0000	1.0000
L10	41	CCI-040125 Reinforcement	110.00 - 113.25	1.0000	1.0000
L10	42	CCI-040125 Reinforcement	110.00 - 113.25	1.0000	1.0000
L10	43	CCI-040125 Reinforcement	110.00 - 113.25	1.0000	1.0000
L10	44	CCI-040125 Reinforcement	110.00 - 113.25	1.0000	1.0000
L11	1	2" flat Climb Ladder Rail	108.75 - 109.00	1.0000	1.0000
L11	8	HB114-21U3M12-XXXF(1-1/4)	108.75 - 109.00	1.0000	1.0000
L11	9	HB158-21U6S12-60M-01(1-5/8)	108.75 - 109.00	1.0000	1.0000
L11	12	AL7-50(1-5/8)	108.75 - 109.00	1.0000	1.0000
L11	36	CCI-050125 Reinforcement	108.75 - 109.00	1.0000	1.0000
L11	37	CCI-050125 Reinforcement	108.75 - 109.00	1.0000	1.0000
L11	39	CCI-050125 Reinforcement	108.75 - 109.00	1.0000	1.0000
L11	40	CCI-050125 Reinforcement	108.75 - 109.00	1.0000	1.0000
L12	1	2" flat Climb Ladder Rail	104.17 - 108.75	1.0000	1.0000
L12	8	HB114-21U3M12-XXXF(1-1/4)	104.17 - 108.75	1.0000	1.0000
L12	9	HB158-21U6S12-60M-01(1-5/8)	104.17 - 108.75	1.0000	1.0000
L12	12	AL7-50(1-5/8)	104.17 - 108.75	1.0000	1.0000
L12	36	CCI-050125 Reinforcement	104.17 - 108.75	1.0000	1.0000
L12	37	CCI-050125 Reinforcement	104.17 - 108.75	1.0000	1.0000
L12	39	CCI-050125 Reinforcement	104.17 - 108.75	1.0000	1.0000
L12	40	CCI-050125 Reinforcement	104.17 - 108.75	1.0000	1.0000

Tower Section	Feed Line Record No.	Description	Feed Line Segment Elev.	K_a No Ice	K_a Ice
L12	46	FP 6 x 2 Reinforcement	104.17 - 108.67	1.0000	1.0000
L12	48	FP 6 x 2 Reinforcement	104.17 - 108.67	1.0000	1.0000
L12	50	FP 6 x 2 Reinforcement	104.17 - 108.67	1.0000	1.0000
L12	52	FP 6 x 2 Reinforcement	104.17 - 108.67	1.0000	1.0000
L13	1	2" flat Climb Ladder Rail	103.92 - 104.17	1.0000	1.0000
L13	8	HB114-21U3M12-XXXF(1-1/4)	103.92 - 104.17	1.0000	1.0000
L13	9	HB158-21U6S12-60M-01(1-5/8)	103.92 - 104.17	1.0000	1.0000
L13	12	AL7-50(1-5/8)	103.92 - 104.17	1.0000	1.0000
L13	36	CCI-050125 Reinforcement	103.92 - 104.17	1.0000	1.0000
L13	37	CCI-050125 Reinforcement	103.92 - 104.17	1.0000	1.0000
L13	39	CCI-050125 Reinforcement	103.92 - 104.17	1.0000	1.0000
L13	40	CCI-050125 Reinforcement	103.92 - 104.17	1.0000	1.0000
L13	46	FP 6 x 2 Reinforcement	103.92 - 104.17	1.0000	1.0000
L13	48	FP 6 x 2 Reinforcement	103.92 - 104.17	1.0000	1.0000
L13	50	FP 6 x 2 Reinforcement	103.92 - 104.17	1.0000	1.0000
L13	52	FP 6 x 2 Reinforcement	103.92 - 104.17	1.0000	1.0000
L14	1	2" flat Climb Ladder Rail	103.17 - 103.92	1.0000	1.0000
L14	8	HB114-21U3M12-XXXF(1-1/4)	103.17 - 103.92	1.0000	1.0000
L14	9	HB158-21U6S12-60M-01(1-5/8)	103.17 - 103.92	1.0000	1.0000
L14	12	AL7-50(1-5/8)	103.17 - 103.92	1.0000	1.0000
L14	36	CCI-050125 Reinforcement	103.17 - 103.92	1.0000	1.0000
L14	37	CCI-050125 Reinforcement	103.17 - 103.92	1.0000	1.0000
L14	39	CCI-050125 Reinforcement	103.17 - 103.92	1.0000	1.0000
L14	40	CCI-050125 Reinforcement	103.17 - 103.92	1.0000	1.0000
L14	46	FP 6 x 2 Reinforcement	103.17 - 103.92	1.0000	1.0000
L14	48	FP 6 x 2 Reinforcement	103.17 - 103.92	1.0000	1.0000
L14	50	FP 6 x 2 Reinforcement	103.17 - 103.92	1.0000	1.0000
L14	52	FP 6 x 2 Reinforcement	103.17 - 103.92	1.0000	1.0000
L15	1	2" flat Climb Ladder Rail	102.92 - 103.17	1.0000	1.0000
L15	8	HB114-21U3M12-XXXF(1-1/4)	102.92 - 103.17	1.0000	1.0000
L15	9	HB158-21U6S12-60M-01(1-5/8)	102.92 - 103.17	1.0000	1.0000
L15	12	AL7-50(1-5/8)	102.92 - 103.17	1.0000	1.0000
L15	36	CCI-050125 Reinforcement	102.92 - 103.17	1.0000	1.0000
L15	37	CCI-050125 Reinforcement	102.92 - 103.17	1.0000	1.0000

Tower Section	Feed Line Record No.	Description	Feed Line Segment Elev.	K_a No Ice	K_a Ice
L15	39	CCI-050125 Reinforcement	102.92 - 103.17	1.0000	1.0000
L15	40	CCI-050125 Reinforcement	102.92 - 103.17	1.0000	1.0000
L15	46	FP 6 x 2 Reinforcement	102.92 - 103.17	1.0000	1.0000
L15	48	FP 6 x 2 Reinforcement	102.92 - 103.17	1.0000	1.0000
L15	50	FP 6 x 2 Reinforcement	102.92 - 103.17	1.0000	1.0000
L15	52	FP 6 x 2 Reinforcement	102.92 - 103.17	1.0000	1.0000
L16	1	2" flat Climb Ladder Rail	102.42 - 102.92	1.0000	1.0000
L16	8	HB114-21U3M12-XXXF(1-1/4)	102.42 - 102.92	1.0000	1.0000
L16	9	HB158-21U6S12-60M-01(1-5/8)	102.42 - 102.92	1.0000	1.0000
L16	12	AL7-50(1-5/8)	102.42 - 102.92	1.0000	1.0000
L16	36	CCI-050125 Reinforcement	102.42 - 102.92	1.0000	1.0000
L16	37	CCI-050125 Reinforcement	102.42 - 102.92	1.0000	1.0000
L16	39	CCI-050125 Reinforcement	102.42 - 102.92	1.0000	1.0000
L16	40	CCI-050125 Reinforcement	102.42 - 102.92	1.0000	1.0000
L16	46	FP 6 x 2 Reinforcement	102.42 - 102.92	1.0000	1.0000
L16	48	FP 6 x 2 Reinforcement	102.42 - 102.92	1.0000	1.0000
L16	50	FP 6 x 2 Reinforcement	102.42 - 102.92	1.0000	1.0000
L16	52	FP 6 x 2 Reinforcement	102.42 - 102.92	1.0000	1.0000
L17	1	2" flat Climb Ladder Rail	102.17 - 102.42	1.0000	1.0000
L17	8	HB114-21U3M12-XXXF(1-1/4)	102.17 - 102.42	1.0000	1.0000
L17	9	HB158-21U6S12-60M-01(1-5/8)	102.17 - 102.42	1.0000	1.0000
L17	12	AL7-50(1-5/8)	102.17 - 102.42	1.0000	1.0000
L17	36	CCI-050125 Reinforcement	102.17 - 102.42	1.0000	1.0000
L17	37	CCI-050125 Reinforcement	102.17 - 102.42	1.0000	1.0000
L17	39	CCI-050125 Reinforcement	102.17 - 102.42	1.0000	1.0000
L17	40	CCI-050125 Reinforcement	102.17 - 102.42	1.0000	1.0000
L17	46	FP 6 x 2 Reinforcement	102.17 - 102.42	1.0000	1.0000
L17	48	FP 6 x 2 Reinforcement	102.17 - 102.42	1.0000	1.0000
L17	50	FP 6 x 2 Reinforcement	102.17 - 102.42	1.0000	1.0000
L17	52	FP 6 x 2 Reinforcement	102.17 - 102.42	1.0000	1.0000
L18	1	2" flat Climb Ladder Rail	100.92 - 102.17	1.0000	1.0000
L18	8	HB114-21U3M12-XXXF(1-1/4)	100.92 - 102.17	1.0000	1.0000
L18	9	HB158-21U6S12-60M-01(1-5/8)	100.92 - 102.17	1.0000	1.0000
L18	12	AL7-50(1-5/8)	100.92 - 102.17	1.0000	1.0000

Tower Section	Feed Line Record No.	Description	Feed Line Segment Elev.	K_a No Ice	K_a Ice
L18	36	CCI-050125 Reinforcement	100.92 - 102.17	1.0000	1.0000
L18	37	CCI-050125 Reinforcement	100.92 - 102.17	1.0000	1.0000
L18	39	CCI-050125 Reinforcement	100.92 - 102.17	1.0000	1.0000
L18	40	CCI-050125 Reinforcement	100.92 - 102.17	1.0000	1.0000
L18	46	FP 6 x 2 Reinforcement	100.92 - 102.17	1.0000	1.0000
L18	48	FP 6 x 2 Reinforcement	100.92 - 102.17	1.0000	1.0000
L18	50	FP 6 x 2 Reinforcement	100.92 - 102.17	1.0000	1.0000
L18	52	FP 6 x 2 Reinforcement	100.92 - 102.17	1.0000	1.0000
L19	1	2" flat Climb Ladder Rail	100.67 - 100.92	1.0000	1.0000
L19	8	HB114-21U3M12-XXXF(1-1/4)	100.67 - 100.92	1.0000	1.0000
L19	9	HB158-21U6S12-60M-01(1-5/8)	100.67 - 100.92	1.0000	1.0000
L19	12	AL7-50(1-5/8)	100.67 - 100.92	1.0000	1.0000
L19	36	CCI-050125 Reinforcement	100.67 - 100.92	1.0000	1.0000
L19	37	CCI-050125 Reinforcement	100.67 - 100.92	1.0000	1.0000
L19	39	CCI-050125 Reinforcement	100.67 - 100.92	1.0000	1.0000
L19	40	CCI-050125 Reinforcement	100.67 - 100.92	1.0000	1.0000
L19	46	FP 6 x 2 Reinforcement	100.67 - 100.92	1.0000	1.0000
L19	48	FP 6 x 2 Reinforcement	100.67 - 100.92	1.0000	1.0000
L19	50	FP 6 x 2 Reinforcement	100.67 - 100.92	1.0000	1.0000
L19	52	FP 6 x 2 Reinforcement	100.67 - 100.92	1.0000	1.0000
L20	1	2" flat Climb Ladder Rail	99.58 - 100.67	1.0000	1.0000
L20	8	HB114-21U3M12-XXXF(1-1/4)	99.58 - 100.67	1.0000	1.0000
L20	9	HB158-21U6S12-60M-01(1-5/8)	99.58 - 100.67	1.0000	1.0000
L20	12	AL7-50(1-5/8)	99.58 - 100.67	1.0000	1.0000
L20	36	CCI-050125 Reinforcement	99.58 - 100.67	1.0000	1.0000
L20	37	CCI-050125 Reinforcement	99.58 - 100.67	1.0000	1.0000
L20	38	CCI-050125 Reinforcement	99.58 - 100.50	1.0000	1.0000
L20	39	CCI-050125 Reinforcement	99.58 - 100.67	1.0000	1.0000
L20	40	CCI-050125 Reinforcement	99.58 - 100.67	1.0000	1.0000
L20	46	FP 6 x 2 Reinforcement	99.58 - 100.67	1.0000	1.0000
L20	48	FP 6 x 2 Reinforcement	99.58 - 100.67	1.0000	1.0000
L20	50	FP 6 x 2 Reinforcement	99.58 - 100.67	1.0000	1.0000
L20	52	FP 6 x 2 Reinforcement	99.58 - 100.67	1.0000	1.0000
L21	1	2" flat Climb Ladder Rail	99.33 - 99.58	1.0000	1.0000

Tower Section	Feed Line Record No.	Description	Feed Line Segment Elev.	K_a No Ice	K_a Ice
L21	8	HB114-21U3M12-XXXF(1-1/4)	99.33 - 99.58	1.0000	1.0000
L21	9	HB158-21U6S12-60M-01(1-5/8)	99.33 - 99.58	1.0000	1.0000
L21	12	AL7-50(1-5/8)	99.33 - 99.58	1.0000	1.0000
L21	36	CCI-050125 Reinforcement	99.33 - 99.58	1.0000	1.0000
L21	37	CCI-050125 Reinforcement	99.33 - 99.58	1.0000	1.0000
L21	38	CCI-050125 Reinforcement	99.33 - 99.58	1.0000	1.0000
L21	39	CCI-050125 Reinforcement	99.33 - 99.58	1.0000	1.0000
L21	40	CCI-050125 Reinforcement	99.33 - 99.58	1.0000	1.0000
L21	46	FP 6 x 2 Reinforcement	99.33 - 99.58	1.0000	1.0000
L21	48	FP 6 x 2 Reinforcement	99.33 - 99.58	1.0000	1.0000
L21	50	FP 6 x 2 Reinforcement	99.33 - 99.58	1.0000	1.0000
L21	52	FP 6 x 2 Reinforcement	99.33 - 99.58	1.0000	1.0000
L22	1	2" flat Climb Ladder Rail	95.25 - 99.33	1.0000	1.0000
L22	8	HB114-21U3M12-XXXF(1-1/4)	95.25 - 99.33	1.0000	1.0000
L22	9	HB158-21U6S12-60M-01(1-5/8)	95.25 - 99.33	1.0000	1.0000
L22	12	AL7-50(1-5/8)	95.25 - 99.33	1.0000	1.0000
L22	15	LDF7-50A(1-5/8)	95.25 - 99.00	1.0000	1.0000
L22	36	CCI-050125 Reinforcement	95.25 - 99.33	1.0000	1.0000
L22	37	CCI-050125 Reinforcement	95.25 - 99.33	1.0000	1.0000
L22	38	CCI-050125 Reinforcement	95.25 - 99.33	1.0000	1.0000
L22	39	CCI-050125 Reinforcement	98.00 - 99.33	1.0000	1.0000
L22	40	CCI-050125 Reinforcement	98.00 - 99.33	1.0000	1.0000
L22	46	FP 6 x 2 Reinforcement	95.25 - 99.33	1.0000	1.0000
L22	48	FP 6 x 2 Reinforcement	95.25 - 99.33	1.0000	1.0000
L22	50	FP 6 x 2 Reinforcement	95.25 - 99.33	1.0000	1.0000
L22	52	FP 6 x 2 Reinforcement	95.25 - 99.33	1.0000	1.0000
L23	1	2" flat Climb Ladder Rail	95.00 - 95.25	1.0000	1.0000
L23	8	HB114-21U3M12-XXXF(1-1/4)	95.00 - 95.25	1.0000	1.0000
L23	9	HB158-21U6S12-60M-01(1-5/8)	95.00 - 95.25	1.0000	1.0000
L23	12	AL7-50(1-5/8)	95.00 - 95.25	1.0000	1.0000
L23	15	LDF7-50A(1-5/8)	95.00 - 95.25	1.0000	1.0000
L23	36	CCI-050125 Reinforcement	95.00 - 95.25	1.0000	1.0000
L23	37	CCI-050125 Reinforcement	95.00 - 95.25	1.0000	1.0000
L23	38	CCI-050125 Reinforcement	95.00 - 95.25	1.0000	1.0000

Tower Section	Feed Line Record No.	Description	Feed Line Segment Elev.	K_a No Ice	K_a Ice
L23	46	FP 6 x 2 Reinforcement	95.00 - 95.25	1.0000	1.0000
L23	48	FP 6 x 2 Reinforcement	95.00 - 95.25	1.0000	1.0000
L23	50	FP 6 x 2 Reinforcement	95.00 - 95.25	1.0000	1.0000
L23	52	FP 6 x 2 Reinforcement	95.00 - 95.25	1.0000	1.0000
L24	1	2" flat Climb Ladder Rail	90.00 - 95.00	1.0000	1.0000
L24	8	HB114-21U3M12-XXXF(1-1/4)	90.00 - 95.00	1.0000	1.0000
L24	9	HB158-21U6S12-60M-01(1-5/8)	90.00 - 95.00	1.0000	1.0000
L24	12	AL7-50(1-5/8)	90.00 - 95.00	1.0000	1.0000
L24	15	LDF7-50A(1-5/8)	90.00 - 95.00	1.0000	1.0000
L24	36	CCI-050125 Reinforcement	93.50 - 95.00	1.0000	1.0000
L24	37	CCI-050125 Reinforcement	93.50 - 95.00	1.0000	1.0000
L24	38	CCI-050125 Reinforcement	93.50 - 95.00	1.0000	1.0000
L24	46	FP 6 x 2 Reinforcement	90.00 - 95.00	1.0000	1.0000
L24	48	FP 6 x 2 Reinforcement	90.00 - 95.00	1.0000	1.0000
L24	50	FP 6 x 2 Reinforcement	90.00 - 95.00	1.0000	1.0000
L24	52	FP 6 x 2 Reinforcement	90.00 - 95.00	1.0000	1.0000
L25	1	2" flat Climb Ladder Rail	85.00 - 90.00	1.0000	1.0000
L25	8	HB114-21U3M12-XXXF(1-1/4)	85.00 - 90.00	1.0000	1.0000
L25	9	HB158-21U6S12-60M-01(1-5/8)	85.00 - 90.00	1.0000	1.0000
L25	12	AL7-50(1-5/8)	85.00 - 90.00	1.0000	1.0000
L25	15	LDF7-50A(1-5/8)	85.00 - 90.00	1.0000	1.0000
L25	46	FP 6 x 2 Reinforcement	85.00 - 90.00	1.0000	1.0000
L25	48	FP 6 x 2 Reinforcement	85.00 - 90.00	1.0000	1.0000
L25	50	FP 6 x 2 Reinforcement	85.00 - 90.00	1.0000	1.0000
L25	52	FP 6 x 2 Reinforcement	85.00 - 90.00	1.0000	1.0000
L26	1	2" flat Climb Ladder Rail	80.50 - 85.00	1.0000	1.0000
L26	8	HB114-21U3M12-XXXF(1-1/4)	80.50 - 85.00	1.0000	1.0000
L26	9	HB158-21U6S12-60M-01(1-5/8)	80.50 - 85.00	1.0000	1.0000
L26	12	AL7-50(1-5/8)	80.50 - 85.00	1.0000	1.0000
L26	15	LDF7-50A(1-5/8)	80.50 - 85.00	1.0000	1.0000
L26	32	CCI-040125 Reinforcement	80.50 - 82.00	1.0000	1.0000
L26	33	CCI-040125 Reinforcement	80.50 - 82.00	1.0000	1.0000
L26	34	CCI-040125 Reinforcement	80.50 - 82.00	1.0000	1.0000
L26	35	CCI-040125 Reinforcement	80.50 - 82.00	1.0000	1.0000

Tower Section	Feed Line Record No.	Description	Feed Line Segment Elev.	K_a No Ice	K_a Ice
L26	45	FP 6 x 2 Reinforcement	80.50 - 83.22	1.0000	1.0000
L26	46	FP 6 x 2 Reinforcement	83.22 - 85.00	1.0000	1.0000
L26	47	FP 6 x 2 Reinforcement	80.50 - 83.22	1.0000	1.0000
L26	48	FP 6 x 2 Reinforcement	83.22 - 85.00	1.0000	1.0000
L26	49	FP 6 x 2 Reinforcement	80.50 - 83.22	1.0000	1.0000
L26	50	FP 6 x 2 Reinforcement	83.22 - 85.00	1.0000	1.0000
L26	51	FP 6 x 2 Reinforcement	80.50 - 83.22	1.0000	1.0000
L26	52	FP 6 x 2 Reinforcement	83.22 - 85.00	1.0000	1.0000
L27	1	2" flat Climb Ladder Rail	80.25 - 80.50	1.0000	1.0000
L27	8	HB114-21U3M12-XXXF(1-1/4)	80.25 - 80.50	1.0000	1.0000
L27	9	HB158-21U6S12-60M-01(1-5/8)	80.25 - 80.50	1.0000	1.0000
L27	12	AL7-50(1-5/8)	80.25 - 80.50	1.0000	1.0000
L27	15	LDF7-50A(1-5/8)	80.25 - 80.50	1.0000	1.0000
L27	32	CCI-040125 Reinforcement	80.25 - 80.50	1.0000	1.0000
L27	33	CCI-040125 Reinforcement	80.25 - 80.50	1.0000	1.0000
L27	34	CCI-040125 Reinforcement	80.25 - 80.50	1.0000	1.0000
L27	35	CCI-040125 Reinforcement	80.25 - 80.50	1.0000	1.0000
L27	45	FP 6 x 2 Reinforcement	80.25 - 80.50	1.0000	1.0000
L27	47	FP 6 x 2 Reinforcement	80.25 - 80.50	1.0000	1.0000
L27	49	FP 6 x 2 Reinforcement	80.25 - 80.50	1.0000	1.0000
L27	51	FP 6 x 2 Reinforcement	80.25 - 80.50	1.0000	1.0000
L28	1	2" flat Climb Ladder Rail	75.25 - 80.25	1.0000	1.0000
L28	8	HB114-21U3M12-XXXF(1-1/4)	75.25 - 80.25	1.0000	1.0000
L28	9	HB158-21U6S12-60M-01(1-5/8)	75.25 - 80.25	1.0000	1.0000
L28	12	AL7-50(1-5/8)	75.25 - 80.25	1.0000	1.0000
L28	15	LDF7-50A(1-5/8)	75.25 - 80.25	1.0000	1.0000
L28	32	CCI-040125 Reinforcement	75.25 - 80.25	1.0000	1.0000
L28	33	CCI-040125 Reinforcement	75.25 - 80.25	1.0000	1.0000
L28	34	CCI-040125 Reinforcement	75.25 - 80.25	1.0000	1.0000
L28	35	CCI-040125 Reinforcement	75.25 - 80.25	1.0000	1.0000
L28	45	FP 6 x 2 Reinforcement	75.25 - 80.25	1.0000	1.0000
L28	47	FP 6 x 2 Reinforcement	75.25 - 80.25	1.0000	1.0000
L28	49	FP 6 x 2 Reinforcement	75.25 - 80.25	1.0000	1.0000
L28	51	FP 6 x 2 Reinforcement	75.25 - 80.25	1.0000	1.0000

Tower Section	Feed Line Record No.	Description	Feed Line Segment Elev.	K_a No Ice	K_a Ice
L29	1	2" flat Climb Ladder Rail	73.58 - 75.25	1.0000	1.0000
L29	8	HB114-21U3M12-XXXF(1-1/4)	73.58 - 75.25	1.0000	1.0000
L29	9	HB158-21U6S12-60M-01(1-5/8)	73.58 - 75.25	1.0000	1.0000
L29	12	AL7-50(1-5/8)	73.58 - 75.25	1.0000	1.0000
L29	15	LDF7-50A(1-5/8)	73.58 - 75.25	1.0000	1.0000
L29	32	CCI-040125 Reinforcement	73.58 - 75.25	1.0000	1.0000
L29	33	CCI-040125 Reinforcement	73.58 - 75.25	1.0000	1.0000
L29	34	CCI-040125 Reinforcement	73.58 - 75.25	1.0000	1.0000
L29	35	CCI-040125 Reinforcement	73.58 - 75.25	1.0000	1.0000
L29	45	FP 6 x 2 Reinforcement	73.58 - 75.25	1.0000	1.0000
L29	47	FP 6 x 2 Reinforcement	73.58 - 75.25	1.0000	1.0000
L29	49	FP 6 x 2 Reinforcement	73.58 - 75.25	1.0000	1.0000
L29	51	FP 6 x 2 Reinforcement	73.58 - 75.25	1.0000	1.0000
L30	1	2" flat Climb Ladder Rail	73.33 - 73.58	1.0000	1.0000
L30	8	HB114-21U3M12-XXXF(1-1/4)	73.33 - 73.58	1.0000	1.0000
L30	9	HB158-21U6S12-60M-01(1-5/8)	73.33 - 73.58	1.0000	1.0000
L30	12	AL7-50(1-5/8)	73.33 - 73.58	1.0000	1.0000
L30	15	LDF7-50A(1-5/8)	73.33 - 73.58	1.0000	1.0000
L30	32	CCI-040125 Reinforcement	73.33 - 73.58	1.0000	1.0000
L30	33	CCI-040125 Reinforcement	73.33 - 73.58	1.0000	1.0000
L30	34	CCI-040125 Reinforcement	73.33 - 73.58	1.0000	1.0000
L30	35	CCI-040125 Reinforcement	73.33 - 73.58	1.0000	1.0000
L30	45	FP 6 x 2 Reinforcement	73.33 - 73.58	1.0000	1.0000
L30	47	FP 6 x 2 Reinforcement	73.33 - 73.58	1.0000	1.0000
L30	49	FP 6 x 2 Reinforcement	73.33 - 73.58	1.0000	1.0000
L30	51	FP 6 x 2 Reinforcement	73.33 - 73.58	1.0000	1.0000
L31	1	2" flat Climb Ladder Rail	69.00 - 73.33	1.0000	1.0000
L31	8	HB114-21U3M12-XXXF(1-1/4)	69.00 - 73.33	1.0000	1.0000
L31	9	HB158-21U6S12-60M-01(1-5/8)	69.00 - 73.33	1.0000	1.0000
L31	12	AL7-50(1-5/8)	69.00 - 73.33	1.0000	1.0000
L31	15	LDF7-50A(1-5/8)	69.00 - 73.33	1.0000	1.0000
L31	32	CCI-040125 Reinforcement	69.00 - 73.33	1.0000	1.0000
L31	33	CCI-040125 Reinforcement	69.00 - 73.33	1.0000	1.0000
L31	34	CCI-040125 Reinforcement	69.00 - 73.33	1.0000	1.0000

Tower Section	Feed Line Record No.	Description	Feed Line Segment Elev.	K_a No Ice	K_a Ice
L31	35	CCI-040125 Reinforcement	69.00 - 73.33	1.0000	1.0000
L31	45	FP 6 x 2 Reinforcement	69.00 - 73.33	1.0000	1.0000
L31	47	FP 6 x 2 Reinforcement	69.00 - 73.33	1.0000	1.0000
L31	49	FP 6 x 2 Reinforcement	69.00 - 73.33	1.0000	1.0000
L31	51	FP 6 x 2 Reinforcement	69.00 - 73.33	1.0000	1.0000
L31	28	CCI-050125 Reinforcement	69.00 - 69.00	1.0000	1.0000
L31	29	CCI-050125 Reinforcement	69.00 - 69.00	1.0000	1.0000
L31	30	CCI-050125 Reinforcement	69.00 - 69.00	1.0000	1.0000
L31	31	CCI-050125 Reinforcement	69.00 - 69.00	1.0000	1.0000
L33	1	2" flat Climb Ladder Rail	66.75 - 67.00	1.0000	1.0000
L33	8	HB114-21U3M12-XXXF(1-1/4)	66.75 - 67.00	1.0000	1.0000
L33	9	HB158-21U6S12-60M-01(1-5/8)	66.75 - 67.00	1.0000	1.0000
L33	12	AL7-50(1-5/8)	66.75 - 67.00	1.0000	1.0000
L33	15	LDF7-50A(1-5/8)	66.75 - 67.00	1.0000	1.0000
L33	28	CCI-050125 Reinforcement	66.75 - 67.00	1.0000	1.0000
L33	29	CCI-050125 Reinforcement	66.75 - 67.00	1.0000	1.0000
L33	30	CCI-050125 Reinforcement	66.75 - 67.00	1.0000	1.0000
L33	31	CCI-050125 Reinforcement	66.75 - 67.00	1.0000	1.0000
L33	32	CCI-040125 Reinforcement	66.75 - 67.00	1.0000	1.0000
L33	33	CCI-040125 Reinforcement	66.75 - 67.00	1.0000	1.0000
L33	34	CCI-040125 Reinforcement	66.75 - 67.00	1.0000	1.0000
L33	35	CCI-040125 Reinforcement	66.75 - 67.00	1.0000	1.0000
L33	45	FP 6 x 2 Reinforcement	66.75 - 67.00	1.0000	1.0000
L33	47	FP 6 x 2 Reinforcement	66.75 - 67.00	1.0000	1.0000
L33	49	FP 6 x 2 Reinforcement	66.75 - 67.00	1.0000	1.0000
L33	51	FP 6 x 2 Reinforcement	66.75 - 67.00	1.0000	1.0000
L34	1	2" flat Climb Ladder Rail	66.50 - 66.75	1.0000	1.0000
L34	8	HB114-21U3M12-XXXF(1-1/4)	66.50 - 66.75	1.0000	1.0000
L34	9	HB158-21U6S12-60M-01(1-5/8)	66.50 - 66.75	1.0000	1.0000
L34	12	AL7-50(1-5/8)	66.50 - 66.75	1.0000	1.0000
L34	15	LDF7-50A(1-5/8)	66.50 - 66.75	1.0000	1.0000
L34	28	CCI-050125 Reinforcement	66.50 - 66.75	1.0000	1.0000
L34	29	CCI-050125 Reinforcement	66.50 - 66.75	1.0000	1.0000
L34	30	CCI-050125 Reinforcement	66.50 - 66.75	1.0000	1.0000

Tower Section	Feed Line Record No.	Description	Feed Line Segment Elev.	K_a No Ice	K_a Ice
L34	31	CCI-050125 Reinforcement	66.50 - 66.75	1.0000	1.0000
L34	32	CCI-040125 Reinforcement	66.50 - 66.75	1.0000	1.0000
L34	33	CCI-040125 Reinforcement	66.50 - 66.75	1.0000	1.0000
L34	34	CCI-040125 Reinforcement	66.50 - 66.75	1.0000	1.0000
L34	35	CCI-040125 Reinforcement	66.50 - 66.75	1.0000	1.0000
L34	45	FP 6 x 2 Reinforcement	66.50 - 66.75	1.0000	1.0000
L34	47	FP 6 x 2 Reinforcement	66.50 - 66.75	1.0000	1.0000
L34	49	FP 6 x 2 Reinforcement	66.50 - 66.75	1.0000	1.0000
L34	51	FP 6 x 2 Reinforcement	66.50 - 66.75	1.0000	1.0000
L35	1	2" flat Climb Ladder Rail	61.50 - 66.50	1.0000	1.0000
L35	8	HB114-21U3M12-XXXF(1-1/4)	61.50 - 66.50	1.0000	1.0000
L35	9	HB158-21U6S12-60M-01(1-5/8)	61.50 - 66.50	1.0000	1.0000
L35	12	AL7-50(1-5/8)	61.50 - 66.50	1.0000	1.0000
L35	15	LDF7-50A(1-5/8)	61.50 - 66.50	1.0000	1.0000
L35	28	CCI-050125 Reinforcement	61.50 - 66.50	1.0000	1.0000
L35	29	CCI-050125 Reinforcement	61.50 - 66.50	1.0000	1.0000
L35	30	CCI-050125 Reinforcement	61.50 - 66.50	1.0000	1.0000
L35	31	CCI-050125 Reinforcement	61.50 - 66.50	1.0000	1.0000
L35	45	FP 6 x 2 Reinforcement	61.50 - 66.50	1.0000	1.0000
L35	47	FP 6 x 2 Reinforcement	61.50 - 66.50	1.0000	1.0000
L35	49	FP 6 x 2 Reinforcement	61.50 - 66.50	1.0000	1.0000
L35	51	FP 6 x 2 Reinforcement	61.50 - 66.50	1.0000	1.0000
L36	1	2" flat Climb Ladder Rail	56.50 - 61.50	1.0000	1.0000
L36	8	HB114-21U3M12-XXXF(1-1/4)	56.50 - 61.50	1.0000	1.0000
L36	9	HB158-21U6S12-60M-01(1-5/8)	56.50 - 61.50	1.0000	1.0000
L36	12	AL7-50(1-5/8)	56.50 - 61.50	1.0000	1.0000
L36	15	LDF7-50A(1-5/8)	56.50 - 61.50	1.0000	1.0000
L36	28	CCI-050125 Reinforcement	56.50 - 61.50	1.0000	1.0000
L36	29	CCI-050125 Reinforcement	56.50 - 61.50	1.0000	1.0000
L36	30	CCI-050125 Reinforcement	56.50 - 61.50	1.0000	1.0000
L36	31	CCI-050125 Reinforcement	56.50 - 61.50	1.0000	1.0000
L36	45	FP 6 x 2 Reinforcement	56.50 - 61.50	1.0000	1.0000
L36	47	FP 6 x 2 Reinforcement	56.50 - 61.50	1.0000	1.0000
L36	49	FP 6 x 2 Reinforcement	56.50 - 61.50	1.0000	1.0000

Tower Section	Feed Line Record No.	Description	Feed Line Segment Elev.	K_a No Ice	K_a Ice
L36	51	FP 6 x 2 Reinforcement	56.50 - 61.50	1.0000	1.0000
L37	1	2" flat Climb Ladder Rail	51.50 - 56.50	1.0000	1.0000
L37	8	HB114-21U3M12-XXXF(1-1/4)	51.50 - 56.50	1.0000	1.0000
L37	9	HB158-21U6S12-60M-01(1-5/8)	51.50 - 56.50	1.0000	1.0000
L37	12	AL7-50(1-5/8)	51.50 - 56.50	1.0000	1.0000
L37	15	LDF7-50A(1-5/8)	51.50 - 56.50	1.0000	1.0000
L37	28	CCI-050125 Reinforcement	51.50 - 56.50	1.0000	1.0000
L37	29	CCI-050125 Reinforcement	51.50 - 56.50	1.0000	1.0000
L37	30	CCI-050125 Reinforcement	51.50 - 56.50	1.0000	1.0000
L37	31	CCI-050125 Reinforcement	51.50 - 56.50	1.0000	1.0000
L37	45	FP 6 x 2 Reinforcement	51.50 - 56.50	1.0000	1.0000
L37	47	FP 6 x 2 Reinforcement	51.50 - 56.50	1.0000	1.0000
L37	49	FP 6 x 2 Reinforcement	51.50 - 56.50	1.0000	1.0000
L37	51	FP 6 x 2 Reinforcement	51.50 - 56.50	1.0000	1.0000
L38	1	2" flat Climb Ladder Rail	48.25 - 51.50	1.0000	1.0000
L38	8	HB114-21U3M12-XXXF(1-1/4)	48.25 - 51.50	1.0000	1.0000
L38	9	HB158-21U6S12-60M-01(1-5/8)	48.25 - 51.50	1.0000	1.0000
L38	12	AL7-50(1-5/8)	48.25 - 51.50	1.0000	1.0000
L38	15	LDF7-50A(1-5/8)	48.25 - 51.50	1.0000	1.0000
L38	19	2.5" Solid Rod Reinforcing	48.25 - 51.00	1.0000	1.0000
L38	20	2.5" Solid Rod Reinforcing	48.25 - 51.00	1.0000	1.0000
L38	21	2.5" Solid Rod Reinforcing	48.25 - 51.00	1.0000	1.0000
L38	22	2.5" Solid Rod Reinforcing	48.25 - 51.00	1.0000	1.0000
L38	28	CCI-050125 Reinforcement	48.25 - 51.50	1.0000	1.0000
L38	29	CCI-050125 Reinforcement	48.25 - 51.50	1.0000	1.0000
L38	30	CCI-050125 Reinforcement	48.25 - 51.50	1.0000	1.0000
L38	31	CCI-050125 Reinforcement	48.25 - 51.50	1.0000	1.0000
L38	45	FP 6 x 2 Reinforcement	48.25 - 51.50	1.0000	1.0000
L38	47	FP 6 x 2 Reinforcement	48.25 - 51.50	1.0000	1.0000
L38	49	FP 6 x 2 Reinforcement	48.25 - 51.50	1.0000	1.0000
L38	51	FP 6 x 2 Reinforcement	48.25 - 51.50	1.0000	1.0000
L39	1	2" flat Climb Ladder Rail	48.00 - 48.25	1.0000	1.0000
L39	8	HB114-21U3M12-XXXF(1-1/4)	48.00 - 48.25	1.0000	1.0000
L39	9	HB158-21U6S12-60M-01(1-5/8)	48.00 - 48.25	1.0000	1.0000

Tower Section	Feed Line Record No.	Description	Feed Line Segment Elev.	K_a No Ice	K_a Ice
L39	12	AL7-50(1-5/8)	48.00 - 48.25	1.0000	1.0000
L39	15	LDF7-50A(1-5/8)	48.00 - 48.25	1.0000	1.0000
L39	19	2.5" Solid Rod Reinforcing	48.00 - 48.25	1.0000	1.0000
L39	20	2.5" Solid Rod Reinforcing	48.00 - 48.25	1.0000	1.0000
L39	21	2.5" Solid Rod Reinforcing	48.00 - 48.25	1.0000	1.0000
L39	22	2.5" Solid Rod Reinforcing	48.00 - 48.25	1.0000	1.0000
L39	28	CCI-050125 Reinforcement	48.00 - 48.25	1.0000	1.0000
L39	29	CCI-050125 Reinforcement	48.00 - 48.25	1.0000	1.0000
L39	30	CCI-050125 Reinforcement	48.00 - 48.25	1.0000	1.0000
L39	31	CCI-050125 Reinforcement	48.00 - 48.25	1.0000	1.0000
L39	45	FP 6 x 2 Reinforcement	48.00 - 48.25	1.0000	1.0000
L39	47	FP 6 x 2 Reinforcement	48.00 - 48.25	1.0000	1.0000
L39	49	FP 6 x 2 Reinforcement	48.00 - 48.25	1.0000	1.0000
L39	51	FP 6 x 2 Reinforcement	48.00 - 48.25	1.0000	1.0000
L40	1	2" flat Climb Ladder Rail	44.25 - 48.00	1.0000	1.0000
L40	8	HB114-21U3M12-XXXF(1-1/4)	44.25 - 48.00	1.0000	1.0000
L40	9	HB158-21U6S12-60M-01(1-5/8)	44.25 - 48.00	1.0000	1.0000
L40	12	AL7-50(1-5/8)	44.25 - 48.00	1.0000	1.0000
L40	15	LDF7-50A(1-5/8)	44.25 - 48.00	1.0000	1.0000
L40	19	2.5" Solid Rod Reinforcing	44.25 - 48.00	1.0000	1.0000
L40	20	2.5" Solid Rod Reinforcing	44.25 - 48.00	1.0000	1.0000
L40	21	2.5" Solid Rod Reinforcing	44.25 - 48.00	1.0000	1.0000
L40	22	2.5" Solid Rod Reinforcing	44.25 - 48.00	1.0000	1.0000
L40	24	CCI-065125 Reinforcement	44.25 - 47.00	1.0000	1.0000
L40	25	CCI-065125 Reinforcement	44.25 - 47.00	1.0000	1.0000
L40	26	CCI-065125 Reinforcement	44.25 - 47.00	1.0000	1.0000
L40	27	CCI-065125 Reinforcement	44.25 - 47.00	1.0000	1.0000
L40	28	CCI-050125 Reinforcement	47.00 - 48.00	1.0000	1.0000
L40	29	CCI-050125 Reinforcement	47.00 - 48.00	1.0000	1.0000
L40	30	CCI-050125 Reinforcement	47.00 - 48.00	1.0000	1.0000
L40	31	CCI-050125 Reinforcement	47.00 - 48.00	1.0000	1.0000
L40	45	FP 6 x 2 Reinforcement	44.25 - 48.00	1.0000	1.0000
L40	47	FP 6 x 2 Reinforcement	44.25 - 48.00	1.0000	1.0000
L40	49	FP 6 x 2 Reinforcement	44.25 - 48.00	1.0000	1.0000

Tower Section	Feed Line Record No.	Description	Feed Line Segment Elev.	K_a No Ice	K_a Ice
L40	51	FP 6 x 2 Reinforcement	44.25 - 48.00	1.0000	1.0000
L41	1	2" flat Climb Ladder Rail	44.00 - 44.25	1.0000	1.0000
L41	8	HB114-21U3M12-XXXF(1-1/4)	44.00 - 44.25	1.0000	1.0000
L41	9	HB158-21U6S12-60M-01(1-5/8)	44.00 - 44.25	1.0000	1.0000
L41	12	AL7-50(1-5/8)	44.00 - 44.25	1.0000	1.0000
L41	15	LDF7-50A(1-5/8)	44.00 - 44.25	1.0000	1.0000
L41	19	2.5" Solid Rod Reinforcing	44.00 - 44.25	1.0000	1.0000
L41	20	2.5" Solid Rod Reinforcing	44.00 - 44.25	1.0000	1.0000
L41	21	2.5" Solid Rod Reinforcing	44.00 - 44.25	1.0000	1.0000
L41	22	2.5" Solid Rod Reinforcing	44.00 - 44.25	1.0000	1.0000
L41	24	CCI-065125 Reinforcement	44.00 - 44.25	1.0000	1.0000
L41	25	CCI-065125 Reinforcement	44.00 - 44.25	1.0000	1.0000
L41	26	CCI-065125 Reinforcement	44.00 - 44.25	1.0000	1.0000
L41	27	CCI-065125 Reinforcement	44.00 - 44.25	1.0000	1.0000
L41	45	FP 6 x 2 Reinforcement	44.00 - 44.25	1.0000	1.0000
L41	47	FP 6 x 2 Reinforcement	44.00 - 44.25	1.0000	1.0000
L41	49	FP 6 x 2 Reinforcement	44.00 - 44.25	1.0000	1.0000
L41	51	FP 6 x 2 Reinforcement	44.00 - 44.25	1.0000	1.0000
L42	1	2" flat Climb Ladder Rail	43.08 - 44.00	1.0000	1.0000
L42	8	HB114-21U3M12-XXXF(1-1/4)	43.08 - 44.00	1.0000	1.0000
L42	9	HB158-21U6S12-60M-01(1-5/8)	43.08 - 44.00	1.0000	1.0000
L42	12	AL7-50(1-5/8)	43.08 - 44.00	1.0000	1.0000
L42	15	LDF7-50A(1-5/8)	43.08 - 44.00	1.0000	1.0000
L42	19	2.5" Solid Rod Reinforcing	43.08 - 44.00	1.0000	1.0000
L42	20	2.5" Solid Rod Reinforcing	43.08 - 44.00	1.0000	1.0000
L42	21	2.5" Solid Rod Reinforcing	43.08 - 44.00	1.0000	1.0000
L42	22	2.5" Solid Rod Reinforcing	43.08 - 44.00	1.0000	1.0000
L42	24	CCI-065125 Reinforcement	43.08 - 44.00	1.0000	1.0000
L42	25	CCI-065125 Reinforcement	43.08 - 44.00	1.0000	1.0000
L42	26	CCI-065125 Reinforcement	43.08 - 44.00	1.0000	1.0000
L42	27	CCI-065125 Reinforcement	43.08 - 44.00	1.0000	1.0000
L42	45	FP 6 x 2 Reinforcement	43.08 - 44.00	1.0000	1.0000
L42	47	FP 6 x 2 Reinforcement	43.08 - 44.00	1.0000	1.0000
L42	49	FP 6 x 2 Reinforcement	43.08 - 44.00	1.0000	1.0000

Tower Section	Feed Line Record No.	Description	Feed Line Segment Elev.	K_a No Ice	K_a Ice
L42	51	FP 6 x 2 Reinforcement	43.08 - 44.00	1.0000	1.0000
L43	1	2" flat Climb Ladder Rail	42.83 - 43.08	1.0000	1.0000
L43	8	HB114-21U3M12-XXXF(1-1/4)	42.83 - 43.08	1.0000	1.0000
L43	9	HB158-21U6S12-60M-01(1-5/8)	42.83 - 43.08	1.0000	1.0000
L43	12	AL7-50(1-5/8)	42.83 - 43.08	1.0000	1.0000
L43	15	LDF7-50A(1-5/8)	42.83 - 43.08	1.0000	1.0000
L43	19	2.5" Solid Rod Reinforcing	42.83 - 43.08	1.0000	1.0000
L43	20	2.5" Solid Rod Reinforcing	42.83 - 43.08	1.0000	1.0000
L43	21	2.5" Solid Rod Reinforcing	42.83 - 43.08	1.0000	1.0000
L43	22	2.5" Solid Rod Reinforcing	42.83 - 43.08	1.0000	1.0000
L43	24	CCI-065125 Reinforcement	42.83 - 43.08	1.0000	1.0000
L43	25	CCI-065125 Reinforcement	42.83 - 43.08	1.0000	1.0000
L43	26	CCI-065125 Reinforcement	42.83 - 43.08	1.0000	1.0000
L43	27	CCI-065125 Reinforcement	42.83 - 43.08	1.0000	1.0000
L43	45	FP 6 x 2 Reinforcement	42.83 - 43.08	1.0000	1.0000
L43	47	FP 6 x 2 Reinforcement	42.83 - 43.08	1.0000	1.0000
L43	49	FP 6 x 2 Reinforcement	42.83 - 43.08	1.0000	1.0000
L43	51	FP 6 x 2 Reinforcement	42.83 - 43.08	1.0000	1.0000
L44	1	2" flat Climb Ladder Rail	37.83 - 42.83	1.0000	1.0000
L44	8	HB114-21U3M12-XXXF(1-1/4)	37.83 - 42.83	1.0000	1.0000
L44	9	HB158-21U6S12-60M-01(1-5/8)	37.83 - 42.83	1.0000	1.0000
L44	12	AL7-50(1-5/8)	37.83 - 42.83	1.0000	1.0000
L44	15	LDF7-50A(1-5/8)	37.83 - 42.83	1.0000	1.0000
L44	19	2.5" Solid Rod Reinforcing	37.83 - 42.83	1.0000	1.0000
L44	20	2.5" Solid Rod Reinforcing	37.83 - 42.83	1.0000	1.0000
L44	21	2.5" Solid Rod Reinforcing	37.83 - 42.83	1.0000	1.0000
L44	22	2.5" Solid Rod Reinforcing	37.83 - 42.83	1.0000	1.0000
L44	24	CCI-065125 Reinforcement	37.83 - 42.83	1.0000	1.0000
L44	25	CCI-065125 Reinforcement	37.83 - 42.83	1.0000	1.0000
L44	26	CCI-065125 Reinforcement	37.83 - 42.83	1.0000	1.0000
L44	27	CCI-065125 Reinforcement	37.83 - 42.83	1.0000	1.0000
L44	45	FP 6 x 2 Reinforcement	37.83 - 42.83	1.0000	1.0000
L44	47	FP 6 x 2 Reinforcement	37.83 - 42.83	1.0000	1.0000
L44	49	FP 6 x 2 Reinforcement	37.83 - 42.83	1.0000	1.0000

Tower Section	Feed Line Record No.	Description	Feed Line Segment Elev.	K_a No Ice	K_a Ice
L44	51	FP 6 x 2 Reinforcement	37.83 - 42.83	1.0000	1.0000
L45	1	2" flat Climb Ladder Rail	30.00 - 37.83	1.0000	1.0000
L45	8	HB114-21U3M12-XXXF(1-1/4)	30.00 - 37.83	1.0000	1.0000
L45	9	HB158-21U6S12-60M-01(1-5/8)	30.00 - 37.83	1.0000	1.0000
L45	12	AL7-50(1-5/8)	30.00 - 37.83	1.0000	1.0000
L45	15	LDF7-50A(1-5/8)	30.00 - 37.83	1.0000	1.0000
L45	19	2.5" Solid Rod Reinforcing	30.00 - 37.83	1.0000	1.0000
L45	20	2.5" Solid Rod Reinforcing	30.00 - 37.83	1.0000	1.0000
L45	21	2.5" Solid Rod Reinforcing	30.00 - 37.83	1.0000	1.0000
L45	22	2.5" Solid Rod Reinforcing	30.00 - 37.83	1.0000	1.0000
L45	24	CCI-065125 Reinforcement	30.00 - 37.83	1.0000	1.0000
L45	25	CCI-065125 Reinforcement	30.00 - 37.83	1.0000	1.0000
L45	26	CCI-065125 Reinforcement	30.00 - 37.83	1.0000	1.0000
L45	27	CCI-065125 Reinforcement	30.00 - 37.83	1.0000	1.0000
L45	45	FP 6 x 2 Reinforcement	30.00 - 37.83	1.0000	1.0000
L45	47	FP 6 x 2 Reinforcement	30.00 - 37.83	1.0000	1.0000
L45	49	FP 6 x 2 Reinforcement	30.00 - 37.83	1.0000	1.0000
L45	51	FP 6 x 2 Reinforcement	30.00 - 37.83	1.0000	1.0000
L47	1	2" flat Climb Ladder Rail	24.00 - 29.00	1.0000	1.0000
L47	8	HB114-21U3M12-XXXF(1-1/4)	24.00 - 29.00	1.0000	1.0000
L47	9	HB158-21U6S12-60M-01(1-5/8)	24.00 - 29.00	1.0000	1.0000
L47	12	AL7-50(1-5/8)	24.00 - 29.00	1.0000	1.0000
L47	15	LDF7-50A(1-5/8)	24.00 - 29.00	1.0000	1.0000
L47	19	2.5" Solid Rod Reinforcing	24.00 - 29.00	1.0000	1.0000
L47	20	2.5" Solid Rod Reinforcing	24.00 - 29.00	1.0000	1.0000
L47	21	2.5" Solid Rod Reinforcing	24.00 - 29.00	1.0000	1.0000
L47	22	2.5" Solid Rod Reinforcing	24.00 - 29.00	1.0000	1.0000
L47	24	CCI-065125 Reinforcement	24.00 - 29.00	1.0000	1.0000
L47	25	CCI-065125 Reinforcement	24.00 - 29.00	1.0000	1.0000
L47	26	CCI-065125 Reinforcement	24.00 - 29.00	1.0000	1.0000
L47	27	CCI-065125 Reinforcement	24.00 - 29.00	1.0000	1.0000
L47	45	FP 6 x 2 Reinforcement	24.00 - 29.00	1.0000	1.0000
L47	47	FP 6 x 2 Reinforcement	24.00 - 29.00	1.0000	1.0000
L47	49	FP 6 x 2 Reinforcement	24.00 - 29.00	1.0000	1.0000

Tower Section	Feed Line Record No.	Description	Feed Line Segment Elev.	K_a No Ice	K_a Ice
L47	51	FP 6 x 2 Reinforcement	24.00 - 29.00	1.0000	1.0000
L48	1	2" flat Climb Ladder Rail	23.75 - 24.00	1.0000	1.0000
L48	8	HB114-21U3M12-XXXF(1-1/4)	23.75 - 24.00	1.0000	1.0000
L48	9	HB158-21U6S12-60M-01(1-5/8)	23.75 - 24.00	1.0000	1.0000
L48	12	AL7-50(1-5/8)	23.75 - 24.00	1.0000	1.0000
L48	15	LDF7-50A(1-5/8)	23.75 - 24.00	1.0000	1.0000
L48	19	2.5" Solid Rod Reinforcing	23.75 - 24.00	1.0000	1.0000
L48	20	2.5" Solid Rod Reinforcing	23.75 - 24.00	1.0000	1.0000
L48	21	2.5" Solid Rod Reinforcing	23.75 - 24.00	1.0000	1.0000
L48	22	2.5" Solid Rod Reinforcing	23.75 - 24.00	1.0000	1.0000
L48	24	CCI-065125 Reinforcement	23.75 - 24.00	1.0000	1.0000
L48	25	CCI-065125 Reinforcement	23.75 - 24.00	1.0000	1.0000
L48	26	CCI-065125 Reinforcement	23.75 - 24.00	1.0000	1.0000
L48	27	CCI-065125 Reinforcement	23.75 - 24.00	1.0000	1.0000
L48	45	FP 6 x 2 Reinforcement	23.75 - 24.00	1.0000	1.0000
L48	47	FP 6 x 2 Reinforcement	23.75 - 24.00	1.0000	1.0000
L48	49	FP 6 x 2 Reinforcement	23.75 - 24.00	1.0000	1.0000
L48	51	FP 6 x 2 Reinforcement	23.75 - 24.00	1.0000	1.0000
L49	1	2" flat Climb Ladder Rail	23.50 - 23.75	1.0000	1.0000
L49	8	HB114-21U3M12-XXXF(1-1/4)	23.50 - 23.75	1.0000	1.0000
L49	9	HB158-21U6S12-60M-01(1-5/8)	23.50 - 23.75	1.0000	1.0000
L49	12	AL7-50(1-5/8)	23.50 - 23.75	1.0000	1.0000
L49	15	LDF7-50A(1-5/8)	23.50 - 23.75	1.0000	1.0000
L49	19	2.5" Solid Rod Reinforcing	23.50 - 23.75	1.0000	1.0000
L49	20	2.5" Solid Rod Reinforcing	23.50 - 23.75	1.0000	1.0000
L49	21	2.5" Solid Rod Reinforcing	23.50 - 23.75	1.0000	1.0000
L49	22	2.5" Solid Rod Reinforcing	23.50 - 23.75	1.0000	1.0000
L49	24	CCI-065125 Reinforcement	23.50 - 23.75	1.0000	1.0000
L49	25	CCI-065125 Reinforcement	23.50 - 23.75	1.0000	1.0000
L49	26	CCI-065125 Reinforcement	23.50 - 23.75	1.0000	1.0000
L49	27	CCI-065125 Reinforcement	23.50 - 23.75	1.0000	1.0000
L49	45	FP 6 x 2 Reinforcement	23.50 - 23.75	1.0000	1.0000
L49	47	FP 6 x 2 Reinforcement	23.50 - 23.75	1.0000	1.0000
L49	49	FP 6 x 2 Reinforcement	23.50 - 23.75	1.0000	1.0000

Tower Section	Feed Line Record No.	Description	Feed Line Segment Elev.	K_a No Ice	K_a Ice
L49	51	FP 6 x 2 Reinforcement	23.50 - 23.75	1.0000	1.0000
L50	1	2" flat Climb Ladder Rail	18.50 - 23.50	1.0000	1.0000
L50	8	HB114-21U3M12-XXXF(1-1/4)	18.50 - 23.50	1.0000	1.0000
L50	9	HB158-21U6S12-60M-01(1-5/8)	18.50 - 23.50	1.0000	1.0000
L50	12	AL7-50(1-5/8)	18.50 - 23.50	1.0000	1.0000
L50	15	LDF7-50A(1-5/8)	18.50 - 23.50	1.0000	1.0000
L50	19	2.5" Solid Rod Reinforcing	18.50 - 23.50	1.0000	1.0000
L50	20	2.5" Solid Rod Reinforcing	18.50 - 23.50	1.0000	1.0000
L50	21	2.5" Solid Rod Reinforcing	18.50 - 23.50	1.0000	1.0000
L50	22	2.5" Solid Rod Reinforcing	18.50 - 23.50	1.0000	1.0000
L50	24	CCI-065125 Reinforcement	18.50 - 23.50	1.0000	1.0000
L50	25	CCI-065125 Reinforcement	18.50 - 23.50	1.0000	1.0000
L50	26	CCI-065125 Reinforcement	18.50 - 23.50	1.0000	1.0000
L50	27	CCI-065125 Reinforcement	18.50 - 23.50	1.0000	1.0000
L50	45	FP 6 x 2 Reinforcement	18.50 - 23.50	1.0000	1.0000
L50	47	FP 6 x 2 Reinforcement	18.50 - 23.50	1.0000	1.0000
L50	49	FP 6 x 2 Reinforcement	18.50 - 23.50	1.0000	1.0000
L50	51	FP 6 x 2 Reinforcement	18.50 - 23.50	1.0000	1.0000
L51	1	2" flat Climb Ladder Rail	13.50 - 18.50	1.0000	1.0000
L51	8	HB114-21U3M12-XXXF(1-1/4)	13.50 - 18.50	1.0000	1.0000
L51	9	HB158-21U6S12-60M-01(1-5/8)	13.50 - 18.50	1.0000	1.0000
L51	12	AL7-50(1-5/8)	13.50 - 18.50	1.0000	1.0000
L51	15	LDF7-50A(1-5/8)	13.50 - 18.50	1.0000	1.0000
L51	19	2.5" Solid Rod Reinforcing	13.50 - 18.50	1.0000	1.0000
L51	20	2.5" Solid Rod Reinforcing	13.50 - 18.50	1.0000	1.0000
L51	21	2.5" Solid Rod Reinforcing	13.50 - 18.50	1.0000	1.0000
L51	22	2.5" Solid Rod Reinforcing	13.50 - 18.50	1.0000	1.0000
L51	24	CCI-065125 Reinforcement	13.50 - 18.50	1.0000	1.0000
L51	25	CCI-065125 Reinforcement	13.50 - 18.50	1.0000	1.0000
L51	26	CCI-065125 Reinforcement	13.50 - 18.50	1.0000	1.0000
L51	27	CCI-065125 Reinforcement	13.50 - 18.50	1.0000	1.0000
L51	45	FP 6 x 2 Reinforcement	13.50 - 18.50	1.0000	1.0000
L51	47	FP 6 x 2 Reinforcement	13.50 - 18.50	1.0000	1.0000
L51	49	FP 6 x 2 Reinforcement	13.50 - 18.50	1.0000	1.0000

Tower Section	Feed Line Record No.	Description	Feed Line Segment Elev.	K_a No Ice	K_a Ice
L51	51	FP 6 x 2 Reinforcement	13.50 - 18.50	1.0000	1.0000
L52	1	2" flat Climb Ladder Rail	11.00 - 13.50	1.0000	1.0000
L52	8	HB114-21U3M12-XXXF(1-1/4)	11.00 - 13.50	1.0000	1.0000
L52	9	HB158-21U6S12-60M-01(1-5/8)	11.00 - 13.50	1.0000	1.0000
L52	12	AL7-50(1-5/8)	11.00 - 13.50	1.0000	1.0000
L52	15	LDF7-50A(1-5/8)	11.00 - 13.50	1.0000	1.0000
L52	19	2.5" Solid Rod Reinforcing	11.00 - 13.50	1.0000	1.0000
L52	20	2.5" Solid Rod Reinforcing	11.00 - 13.50	1.0000	1.0000
L52	21	2.5" Solid Rod Reinforcing	11.00 - 13.50	1.0000	1.0000
L52	22	2.5" Solid Rod Reinforcing	11.00 - 13.50	1.0000	1.0000
L52	24	CCI-065125 Reinforcement	11.00 - 13.50	1.0000	1.0000
L52	25	CCI-065125 Reinforcement	11.00 - 13.50	1.0000	1.0000
L52	26	CCI-065125 Reinforcement	11.00 - 13.50	1.0000	1.0000
L52	27	CCI-065125 Reinforcement	11.00 - 13.50	1.0000	1.0000
L52	45	FP 6 x 2 Reinforcement	11.00 - 13.50	1.0000	1.0000
L52	47	FP 6 x 2 Reinforcement	11.00 - 13.50	1.0000	1.0000
L52	49	FP 6 x 2 Reinforcement	11.00 - 13.50	1.0000	1.0000
L52	51	FP 6 x 2 Reinforcement	11.00 - 13.50	1.0000	1.0000
L53	1	2" flat Climb Ladder Rail	10.75 - 11.00	1.0000	1.0000
L53	8	HB114-21U3M12-XXXF(1-1/4)	10.75 - 11.00	1.0000	1.0000
L53	9	HB158-21U6S12-60M-01(1-5/8)	10.75 - 11.00	1.0000	1.0000
L53	12	AL7-50(1-5/8)	10.75 - 11.00	1.0000	1.0000
L53	15	LDF7-50A(1-5/8)	10.75 - 11.00	1.0000	1.0000
L53	19	2.5" Solid Rod Reinforcing	10.75 - 11.00	1.0000	1.0000
L53	20	2.5" Solid Rod Reinforcing	10.75 - 11.00	1.0000	1.0000
L53	21	2.5" Solid Rod Reinforcing	10.75 - 11.00	1.0000	1.0000
L53	22	2.5" Solid Rod Reinforcing	10.75 - 11.00	1.0000	1.0000
L53	24	CCI-065125 Reinforcement	10.75 - 11.00	1.0000	1.0000
L53	25	CCI-065125 Reinforcement	10.75 - 11.00	1.0000	1.0000
L53	26	CCI-065125 Reinforcement	10.75 - 11.00	1.0000	1.0000
L53	27	CCI-065125 Reinforcement	10.75 - 11.00	1.0000	1.0000
L53	45	FP 6 x 2 Reinforcement	10.75 - 11.00	1.0000	1.0000
L53	47	FP 6 x 2 Reinforcement	10.75 - 11.00	1.0000	1.0000
L53	49	FP 6 x 2 Reinforcement	10.75 - 11.00	1.0000	1.0000

Tower Section	Feed Line Record No.	Description	Feed Line Segment Elev.	K_a No Ice	K_a Ice
L53	51	FP 6 x 2 Reinforcement	10.75 - 11.00	1.0000	1.0000
L54	1	2" flat Climb Ladder Rail	6.00 - 10.75	1.0000	1.0000
L54	8	HB114-21U3M12-XXXF(1-1/4)	6.00 - 10.75	1.0000	1.0000
L54	9	HB158-21U6S12-60M-01(1-5/8)	6.00 - 10.75	1.0000	1.0000
L54	12	AL7-50(1-5/8)	6.00 - 10.75	1.0000	1.0000
L54	15	LDF7-50A(1-5/8)	6.00 - 10.75	1.0000	1.0000
L54	19	2.5" Solid Rod Reinforcing	6.00 - 10.75	1.0000	1.0000
L54	20	2.5" Solid Rod Reinforcing	6.00 - 10.75	1.0000	1.0000
L54	21	2.5" Solid Rod Reinforcing	6.00 - 10.75	1.0000	1.0000
L54	22	2.5" Solid Rod Reinforcing	6.00 - 10.75	1.0000	1.0000
L54	24	CCI-065125 Reinforcement	6.00 - 10.75	1.0000	1.0000
L54	25	CCI-065125 Reinforcement	6.00 - 10.75	1.0000	1.0000
L54	26	CCI-065125 Reinforcement	6.00 - 10.75	1.0000	1.0000
L54	27	CCI-065125 Reinforcement	6.00 - 10.75	1.0000	1.0000
L54	45	FP 6 x 2 Reinforcement	6.00 - 10.75	1.0000	1.0000
L54	47	FP 6 x 2 Reinforcement	8.50 - 10.75	1.0000	1.0000
L54	49	FP 6 x 2 Reinforcement	6.00 - 10.75	1.0000	1.0000
L54	51	FP 6 x 2 Reinforcement	8.50 - 10.75	1.0000	1.0000
L55	1	2" flat Climb Ladder Rail	5.75 - 6.00	1.0000	1.0000
L55	8	HB114-21U3M12-XXXF(1-1/4)	5.75 - 6.00	1.0000	1.0000
L55	9	HB158-21U6S12-60M-01(1-5/8)	5.75 - 6.00	1.0000	1.0000
L55	12	AL7-50(1-5/8)	5.75 - 6.00	1.0000	1.0000
L55	15	LDF7-50A(1-5/8)	5.75 - 6.00	1.0000	1.0000
L55	19	2.5" Solid Rod Reinforcing	5.75 - 6.00	1.0000	1.0000
L55	20	2.5" Solid Rod Reinforcing	5.75 - 6.00	1.0000	1.0000
L55	21	2.5" Solid Rod Reinforcing	5.75 - 6.00	1.0000	1.0000
L55	22	2.5" Solid Rod Reinforcing	5.75 - 6.00	1.0000	1.0000
L55	24	CCI-065125 Reinforcement	5.75 - 6.00	1.0000	1.0000
L55	25	CCI-065125 Reinforcement	5.75 - 6.00	1.0000	1.0000
L55	26	CCI-065125 Reinforcement	5.75 - 6.00	1.0000	1.0000
L55	27	CCI-065125 Reinforcement	5.75 - 6.00	1.0000	1.0000
L55	45	FP 6 x 2 Reinforcement	5.75 - 6.00	1.0000	1.0000
L55	49	FP 6 x 2 Reinforcement	5.75 - 6.00	1.0000	1.0000
L56	1	2" flat Climb Ladder Rail	3.25 - 5.75	1.0000	1.0000
L56	8	HB114-21U3M12-XXXF(1-1/4)	3.25 - 5.75	1.0000	1.0000
L56	9	HB158-21U6S12-60M-01(1-5/8)	3.25 - 5.75	1.0000	1.0000
L56	12	AL7-50(1-5/8)	3.25 - 5.75	1.0000	1.0000
L56	15	LDF7-50A(1-5/8)	3.25 - 5.75	1.0000	1.0000
L56	19	2.5" Solid Rod Reinforcing	3.25 - 5.75	1.0000	1.0000
L56	20	2.5" Solid Rod Reinforcing	3.25 - 5.75	1.0000	1.0000
L56	21	2.5" Solid Rod Reinforcing	3.25 - 5.75	1.0000	1.0000
L56	22	2.5" Solid Rod Reinforcing	3.25 - 5.75	1.0000	1.0000
L56	24	CCI-065125 Reinforcement	3.25 - 5.75	1.0000	1.0000
L56	25	CCI-065125 Reinforcement	3.25 - 5.75	1.0000	1.0000
L56	26	CCI-065125 Reinforcement	3.25 - 5.75	1.0000	1.0000
L56	27	CCI-065125 Reinforcement	3.25 - 5.75	1.0000	1.0000
L56	45	FP 6 x 2 Reinforcement	3.50 - 5.75	1.0000	1.0000
L56	49	FP 6 x 2 Reinforcement	3.50 - 5.75	1.0000	1.0000
L57	1	2" flat Climb Ladder Rail	3.00 - 3.25	1.0000	1.0000

Tower Section	Feed Line Record No.	Description	Feed Line Segment Elev.	K_a No Ice	K_a Ice
L57	8	HB114-21U3M12-XXXF(1-1/4)	3.00 - 3.25	1.0000	1.0000
L57	9	HB158-21U6S12-60M-01(1-5/8)	3.00 - 3.25	1.0000	1.0000
L57	12	AL7-50(1-5/8)	3.00 - 3.25	1.0000	1.0000
L57	15	LDF7-50A(1-5/8)	3.00 - 3.25	1.0000	1.0000
L57	19	2.5" Solid Rod Reinforcing	3.00 - 3.25	1.0000	1.0000
L57	20	2.5" Solid Rod Reinforcing	3.00 - 3.25	1.0000	1.0000
L57	21	2.5" Solid Rod Reinforcing	3.00 - 3.25	1.0000	1.0000
L57	22	2.5" Solid Rod Reinforcing	3.00 - 3.25	1.0000	1.0000
L57	24	CCI-065125 Reinforcement	3.00 - 3.25	1.0000	1.0000
L57	25	CCI-065125 Reinforcement	3.00 - 3.25	1.0000	1.0000
L57	26	CCI-065125 Reinforcement	3.00 - 3.25	1.0000	1.0000
L57	27	CCI-065125 Reinforcement	3.00 - 3.25	1.0000	1.0000
L58	1	2" flat Climb Ladder Rail	0.00 - 3.00	1.0000	1.0000
L58	8	HB114-21U3M12-XXXF(1-1/4)	0.00 - 3.00	1.0000	1.0000
L58	9	HB158-21U6S12-60M-01(1-5/8)	0.00 - 3.00	1.0000	1.0000
L58	12	AL7-50(1-5/8)	0.00 - 3.00	1.0000	1.0000
L58	15	LDF7-50A(1-5/8)	0.00 - 3.00	1.0000	1.0000
L58	19	2.5" Solid Rod Reinforcing	0.00 - 3.00	1.0000	1.0000
L58	20	2.5" Solid Rod Reinforcing	0.00 - 3.00	1.0000	1.0000
L58	21	2.5" Solid Rod Reinforcing	0.00 - 3.00	1.0000	1.0000
L58	22	2.5" Solid Rod Reinforcing	0.00 - 3.00	1.0000	1.0000
L58	24	CCI-065125 Reinforcement	0.00 - 3.00	1.0000	1.0000
L58	25	CCI-065125 Reinforcement	0.00 - 3.00	1.0000	1.0000
L58	26	CCI-065125 Reinforcement	0.00 - 3.00	1.0000	1.0000
L58	27	CCI-065125 Reinforcement	0.00 - 3.00	1.0000	1.0000

Discrete Tower Loads

Description	Face or Leg	Offset Type	Offsets: Horz Lateral Vert ft ft ft	Azimuth Adjustment °	Placement ft		C_AA_A Front ft^2	C_AA_A Side ft^2	Weight K
7770.00	A	From Leg	4.0000 0.00 4.00	0.0000	150.0000	No Ice 1/2" Ice 1" Ice 2" Ice	5.5085 5.8673 6.2332 6.9859	2.9282 3.2730 3.6252 4.3517	0.04 0.07 0.11 0.20
7770.00	B	From Leg	4.0000 0.00 4.00	0.0000	150.0000	No Ice 1/2" Ice 1" Ice 2" Ice	5.5085 5.8673 6.2332 6.9859	2.9282 3.2730 3.6252 4.3517	0.04 0.07 0.11 0.20
7770.00	C	From Leg	4.0000 0.00 4.00	0.0000	150.0000	No Ice 1/2" Ice 1" Ice 2" Ice	5.5085 5.8673 6.2332 6.9859	2.9282 3.2730 3.6252 4.3517	0.04 0.07 0.11 0.20
QS66512-2	A	From Leg	4.0000 0.00 4.00	0.0000	150.0000	No Ice 1/2" Ice 1" Ice	4.0100 4.4100 4.8100 5.6500	3.3700 3.7600 4.1500 4.9700	0.11 0.17 0.23 0.38

Description	Face or Leg	Offset Type	Offsets: Horz Lateral Vert ft ft ft	Azimuth Adjustment °	Placement ft		C_AA_A Front ft^2	C_AA_A Side ft^2	Weight K
						2" Ice			
QS66512-2	B	From Leg	4.0000	0.0000	150.0000	No Ice	4.0100	3.3700	0.11
			0.00			1/2"	4.4100	3.7600	0.17
			4.00			Ice	4.8100	4.1500	0.23
						1" Ice	5.6500	4.9700	0.38
						2" Ice			
QS66512-2	C	From Leg	4.0000	0.0000	150.0000	No Ice	4.0100	3.3700	0.11
			0.00			1/2"	4.4100	3.7600	0.17
			4.00			Ice	4.8100	4.1500	0.23
						1" Ice	5.6500	4.9700	0.38
						2" Ice			
HPA-65R-BUU-H6	A	From Leg	4.0000	0.0000	150.0000	No Ice	9.2200	4.6500	0.05
			0.00			1/2"	10.0000	5.3600	0.11
			4.00			Ice	10.7900	6.0900	0.17
						1" Ice	12.4300	7.6000	0.32
						2" Ice			
HPA-65R-BUU-H6	B	From Leg	4.0000	0.0000	150.0000	No Ice	9.2200	4.6500	0.05
			0.00			1/2"	10.0000	5.3600	0.11
			4.00			Ice	10.7900	6.0900	0.17
						1" Ice	12.4300	7.6000	0.32
						2" Ice			
HPA-65R-BUU-H6	C	From Leg	4.0000	0.0000	150.0000	No Ice	9.2200	4.6500	0.05
			0.00			1/2"	10.0000	5.3600	0.11
			4.00			Ice	10.7900	6.0900	0.17
						1" Ice	12.4300	7.6000	0.32
						2" Ice			
TT19-08BP111-001	A	From Leg	4.0000	0.0000	150.0000	No Ice	0.5527	0.4455	0.02
			0.00			1/2"	0.6487	0.5342	0.02
			4.00			Ice	0.7520	0.6303	0.03
						1" Ice	0.9809	0.8448	0.05
						2" Ice			
TT19-08BP111-001	B	From Leg	4.0000	0.0000	150.0000	No Ice	0.5527	0.4455	0.02
			0.00			1/2"	0.6487	0.5342	0.02
			4.00			Ice	0.7520	0.6303	0.03
						1" Ice	0.9809	0.8448	0.05
						2" Ice			
TT19-08BP111-001	C	From Leg	4.0000	0.0000	150.0000	No Ice	0.5527	0.4455	0.02
			0.00			1/2"	0.6487	0.5342	0.02
			4.00			Ice	0.7520	0.6303	0.03
						1" Ice	0.9809	0.8448	0.05
						2" Ice			
(2) 7020.00	A	From Leg	4.0000	0.0000	150.0000	No Ice	0.1021	0.1750	0.00
			0.00			1/2"	0.1469	0.2393	0.01
			4.00			Ice	0.1991	0.3109	0.01
						1" Ice	0.3258	0.4765	0.02
						2" Ice			
(2) 7020.00	B	From Leg	4.0000	0.0000	150.0000	No Ice	0.1021	0.1750	0.00
			0.00			1/2"	0.1469	0.2393	0.01
			4.00			Ice	0.1991	0.3109	0.01
						1" Ice	0.3258	0.4765	0.02
						2" Ice			
(2) 7020.00	C	From Leg	4.0000	0.0000	150.0000	No Ice	0.1021	0.1750	0.00
			0.00			1/2"	0.1469	0.2393	0.01
			4.00			Ice	0.1991	0.3109	0.01
						1" Ice	0.3258	0.4765	0.02
						2" Ice			
RRUS 32	A	From Leg	4.0000	0.0000	150.0000	No Ice	2.8571	1.7766	0.06
			0.00			1/2"	3.0830	1.9677	0.08
			4.00			Ice	3.3163	2.1658	0.10
						1" Ice	3.8052	2.5829	0.16
						2" Ice			
RRUS 32	B	From Leg	4.0000	0.0000	150.0000	No Ice	2.8571	1.7766	0.06
			0.00			1/2"	3.0830	1.9677	0.08
			4.00			Ice	3.3163	2.1658	0.10
						1" Ice	3.8052	2.5829	0.16

Description	Face or Leg	Offset Type	Offsets: Horz Lateral Vert ft ft ft	Azimuth Adjustment °	Placement ft		C_AA_A Front ft^2	C_AA_A Side ft^2	Weight K
						2" Ice			
RRUS 32	C	From Leg	4.0000	0.0000	150.0000	No Ice	2.8571	1.7766	0.06
			0.00			1/2"	3.0830	1.9677	0.08
			4.00			Ice	3.3163	2.1658	0.10
						1" Ice	3.8052	2.5829	0.16
						2" Ice			
1001940	A	From Leg	4.0000	0.0000	150.0000	No Ice	0.1758	0.0833	0.00
			0.00			1/2"	0.2317	0.1264	0.00
			4.00			Ice	0.2950	0.1778	0.01
						1" Ice	0.4439	0.3045	0.01
						2" Ice			
1001940	B	From Leg	4.0000	0.0000	150.0000	No Ice	0.1758	0.0833	0.00
			0.00			1/2"	0.2317	0.1264	0.00
			4.00			Ice	0.2950	0.1778	0.01
						1" Ice	0.4439	0.3045	0.01
						2" Ice			
1001940	C	From Leg	4.0000	0.0000	150.0000	No Ice	0.1758	0.0833	0.00
			0.00			1/2"	0.2317	0.1264	0.00
			4.00			Ice	0.2950	0.1778	0.01
						1" Ice	0.4439	0.3045	0.01
						2" Ice			
(2) DC6-48-60-18-8F	A	From Leg	4.0000	0.0000	150.0000	No Ice	1.2117	1.2117	0.03
			0.00			1/2"	1.8924	1.8924	0.05
			4.00			Ice	2.1051	2.1051	0.08
						1" Ice	2.5703	2.5703	0.14
						2" Ice			
(2) TPX-070821	A	From Leg	4.0000	0.0000	150.0000	No Ice	0.4688	0.1009	0.01
			0.00			1/2"	0.5585	0.1471	0.01
			4.00			Ice	0.6556	0.2020	0.02
						1" Ice	0.8721	0.3340	0.03
						2" Ice			
(2) TPX-070821	B	From Leg	4.0000	0.0000	150.0000	No Ice	0.4688	0.1009	0.01
			0.00			1/2"	0.5585	0.1471	0.01
			4.00			Ice	0.6556	0.2020	0.02
						1" Ice	0.8721	0.3340	0.03
						2" Ice			
(2) TPX-070821	C	From Leg	4.0000	0.0000	150.0000	No Ice	0.4688	0.1009	0.01
			0.00			1/2"	0.5585	0.1471	0.01
			4.00			Ice	0.6556	0.2020	0.02
						1" Ice	0.8721	0.3340	0.03
						2" Ice			
RRUS 32 B2	A	From Leg	4.0000	0.0000	150.0000	No Ice	2.7427	1.6681	0.05
			0.00			1/2"	2.9647	1.8552	0.07
			4.00			Ice	3.1941	2.0493	0.10
						1" Ice	3.6753	2.4585	0.16
						2" Ice			
RRUS 32 B2	B	From Leg	4.0000	0.0000	150.0000	No Ice	2.7427	1.6681	0.05
			0.00			1/2"	2.9647	1.8552	0.07
			4.00			Ice	3.1941	2.0493	0.10
						1" Ice	3.6753	2.4585	0.16
						2" Ice			
RRUS 32 B2	C	From Leg	4.0000	0.0000	150.0000	No Ice	2.7427	1.6681	0.05
			0.00			1/2"	2.9647	1.8552	0.07
			4.00			Ice	3.1941	2.0493	0.10
						1" Ice	3.6753	2.4585	0.16
						2" Ice			
RRUS 11	A	From Leg	4.0000	0.0000	150.0000	No Ice	2.7908	1.1923	0.05
			0.00			1/2"	2.9984	1.3395	0.07
			4.00			Ice	3.2134	1.4957	0.10
						1" Ice	3.6656	1.8390	0.15
						2" Ice			
RRUS 11	B	From Leg	4.0000	0.0000	150.0000	No Ice	2.7908	1.1923	0.05
			0.00			1/2"	2.9984	1.3395	0.07
			4.00			Ice	3.2134	1.4957	0.10
						1" Ice	3.6656	1.8390	0.15

Description	Face or Leg	Offset Type	Offsets: Horz Lateral Vert ft ft ft	Azimuth Adjustment °	Placement ft		C_AA_A Front ft^2	C_AA_A Side ft^2	Weight K
						2" Ice			
RRUS 11	C	From Leg	4.0000	0.0000	150.0000	No Ice	2.7908	1.1923	0.05
			0.00			1/2"	2.9984	1.3395	0.07
			4.00			Ice	3.2134	1.4957	0.10
						1" Ice	3.6656	1.8390	0.15
						2" Ice			
RRUS 32 B66	A	From Leg	4.0000	0.0000	150.0000	No Ice	2.7427	1.6681	0.05
			0.00			1/2"	2.9647	1.8552	0.07
			4.00			Ice	3.1941	2.0493	0.10
						1" Ice	3.6753	2.4585	0.16
						2" Ice			
RRUS 32 B66	B	From Leg	4.0000	0.0000	150.0000	No Ice	2.7427	1.6681	0.05
			0.00			1/2"	2.9647	1.8552	0.07
			4.00			Ice	3.1941	2.0493	0.10
						1" Ice	3.6753	2.4585	0.16
						2" Ice			
RRUS 32 B66	C	From Leg	4.0000	0.0000	150.0000	No Ice	2.7427	1.6681	0.05
			0.00			1/2"	2.9647	1.8552	0.07
			4.00			Ice	3.1941	2.0493	0.10
						1" Ice	3.6753	2.4585	0.16
						2" Ice			
Platform Mount (LP 101-1)	C	None		0.0000	150.0000	No Ice	35.8300	35.8300	1.50
						1/2"	40.9800	40.9800	2.32
						Ice	46.5700	46.5700	3.26
						1" Ice	60.4600	60.4600	5.51
						2" Ice			
Top Hat 20" Diameter x 3'-6" Tall	C	None		0.0000	150.0000	No Ice	2.9167	2.9167	0.20
						1/2"	4.3896	4.3896	0.26
						Ice	4.7056	4.7056	0.31
						1" Ice	5.3667	5.3667	0.45
						2" Ice			
Side Arm Mount [SO 201-3]	C	None		0.0000	150.0000	No Ice	5.2700	5.2700	0.29
						1/2"	6.4700	6.4700	0.35
						Ice	7.7800	7.7800	0.43
						1" Ice	10.6600	10.6600	0.66
						2" Ice			
***									
TME-RRUS-11	A	From Leg	1.0000	0.0000	147.0000	No Ice	2.7845	1.1872	0.05
			0.00			1/2"	2.9919	1.3342	0.07
			0.00			Ice	3.2066	1.4897	0.09
						1" Ice	3.6584	1.8326	0.15
						2" Ice			
TME-RRUS-11	B	From Leg	1.0000	0.0000	147.0000	No Ice	2.7845	1.1872	0.05
			0.00			1/2"	2.9919	1.3342	0.07
			0.00			Ice	3.2066	1.4897	0.09
						1" Ice	3.6584	1.8326	0.15
						2" Ice			
TME-RRUS-11	C	From Leg	1.0000	0.0000	147.0000	No Ice	2.7845	1.1872	0.05
			0.00			1/2"	2.9919	1.3342	0.07
			0.00			Ice	3.2066	1.4897	0.09
						1" Ice	3.6584	1.8326	0.15
						2" Ice			
TME-DC6-48-60-18-8F	B	From Leg	1.0000	0.0000	147.0000	No Ice	0.9167	0.9167	0.02
			0.00			1/2"	1.4583	1.4583	0.04
			0.00			Ice	1.6431	1.6431	0.06
						1" Ice	2.0417	2.0417	0.11
						2" Ice			
Pipe Mount [PM 601-3]	C	None		0.0000	147.0000	No Ice	3.1700	3.1700	0.20
						1/2"	3.7900	3.7900	0.23
						Ice	4.4200	4.4200	0.28
						1" Ice	5.7600	5.7600	0.40
						2" Ice			
Side Arm Mount [SO 102-3]	C	None		0.0000	147.0000	No Ice	3.6000	3.6000	0.07
						1/2"	4.1800	4.1800	0.11
						Ice	4.7500	4.7500	0.14

Description	Face or Leg	Offset Type	Offsets: Horz Lateral Vert ft ft ft	Azimuth Adjustment °	Placement ft		C_AA_A Front ft^2	C_AA_A Side ft^2	Weight K
						1" Ice 2" Ice	5.9000	5.9000	0.20
***									
HORIZON COMPACT	B	From Leg	4.0000 0.00 5.00	0.0000	138.0000	No Ice 1/2" Ice 1" Ice 2" Ice	0.7208 0.8278 0.9422 1.1933	0.3681 0.4499 0.5391 0.7396	0.01 0.02 0.03 0.05
HORIZON COMPACT	C	From Leg	4.0000 0.00 5.00	0.0000	138.0000	No Ice 1/2" Ice 1" Ice 2" Ice	0.7208 0.8278 0.9422 1.1933	0.3681 0.4499 0.5391 0.7396	0.01 0.02 0.03 0.05
CW JUNCTION BOX	A	From Leg	4.0000 0.00 5.00	0.0000	138.0000	No Ice 1/2" Ice 1" Ice 2" Ice	1.2000 1.3370 1.4815 1.7926	0.6000 0.7037 0.8148 1.0593	0.00 0.01 0.02 0.05
AAHC w/ Mount Pipe	A	From Leg	4.0000 0.00 2.00	0.0000	138.0000	No Ice 1/2" Ice 1" Ice 2" Ice	4.4091 4.7270 5.0553 5.7429	2.6915 3.0786 3.4862 4.3595	0.12 0.16 0.20 0.31
AAHC w/ Mount Pipe	B	From Leg	4.0000 0.00 2.00	0.0000	138.0000	No Ice 1/2" Ice 1" Ice 2" Ice	4.4091 4.7270 5.0553 5.7429	2.6915 3.0786 3.4862 4.3595	0.12 0.16 0.20 0.31
AAHC w/ Mount Pipe	C	From Leg	4.0000 0.00 2.00	0.0000	138.0000	No Ice 1/2" Ice 1" Ice 2" Ice	4.4091 4.7270 5.0553 5.7429	2.6915 3.0786 3.4862 4.3595	0.12 0.16 0.20 0.31
NNVV-65B-R4 w/ Mount Pipe	A	From Leg	4.0000 0.00 2.00	0.0000	138.0000	No Ice 1/2" Ice 1" Ice 2" Ice	7.5500 8.0400 8.5300 9.5600	4.2300 4.6700 5.1200 6.0500	0.11 0.20 0.30 0.53
NNVV-65B-R4 w/ Mount Pipe	B	From Leg	4.0000 0.00 2.00	0.0000	138.0000	No Ice 1/2" Ice 1" Ice 2" Ice	7.5500 8.0400 8.5300 9.5600	4.2300 4.6700 5.1200 6.0500	0.11 0.20 0.30 0.53
NNVV-65B-R4 w/ Mount Pipe	C	From Leg	4.0000 0.00 2.00	0.0000	138.0000	No Ice 1/2" Ice 1" Ice 2" Ice	7.5500 8.0400 8.5300 9.5600	4.2300 4.6700 5.1200 6.0500	0.11 0.20 0.30 0.53
(3) RRH2X50-800	A	From Leg	4.0000 0.00 2.00	0.0000	138.0000	No Ice 1/2" Ice 1" Ice 2" Ice	1.7008 1.8640 2.0345 2.3979	1.2822 1.4275 1.5803 1.9081	0.05 0.07 0.09 0.14
(3) RRH2X50-800	C	From Leg	4.0000 0.00 2.00	0.0000	138.0000	No Ice 1/2" Ice 1" Ice 2" Ice	1.7008 1.8640 2.0345 2.3979	1.2822 1.4275 1.5803 1.9081	0.05 0.07 0.09 0.14
(3) PCS 1900MHZ 4X45W-65MHZ	B	From Leg	4.0000 0.00 2.00	0.0000	138.0000	No Ice 1/2" Ice 1" Ice 2" Ice	2.3218 2.5266 2.7388 3.1855	2.2381 2.4407 2.6507 3.0929	0.06 0.08 0.11 0.17
Platform Mount [LP 1202-1_KCKR-HR-1]	C	None		0.0000	138.0000	No Ice	40.4600 49.5800	40.4600 49.5800	3.98 4.90

Description	Face or Leg	Offset Type	Offsets: Horz Lateral Vert ft ft ft	Azimuth Adjustment °	Placement ft		C_AA_A Front ft^2	C_AA_A Side ft^2	Weight K
						1/2" Ice	58.6500 76.8500	58.6500 76.8500	5.98 8.58
						1" Ice			
						2" Ice			
***									
AIR -32 B2A/B66AA	A	From Leg	4.0000 0.00 0.00	0.0000	120.0000	No Ice	6.5099	4.7123	0.13
						1/2" Ice	6.8870 7.2712	5.0683 5.4313	0.18 0.23
						1" Ice	8.0604	6.1782	0.35
						2" Ice			
AIR -32 B2A/B66AA	B	From Leg	4.0000 0.00 0.00	0.0000	120.0000	No Ice	6.5099	4.7123	0.13
						1/2" Ice	6.8870 7.2712	5.0683 5.4313	0.18 0.23
						1" Ice	8.0604	6.1782	0.35
						2" Ice			
AIR -32 B2A/B66AA	C	From Leg	4.0000 0.00 0.00	0.0000	120.0000	No Ice	6.5099	4.7123	0.13
						1/2" Ice	6.8870 7.2712	5.0683 5.4313	0.18 0.23
						1" Ice	8.0604	6.1782	0.35
						2" Ice			
AIR 21 B2A/B4P	A	From Leg	4.0000 0.00 0.00	0.0000	120.0000	No Ice	5.9244	4.2192	0.08
						1/2" Ice	6.2883 6.6592	4.5624 4.9126	0.12 0.17
						1" Ice	7.4219	5.6341	0.28
						2" Ice			
AIR 21 B2A/B4P	B	From Leg	4.0000 0.00 0.00	0.0000	120.0000	No Ice	5.9244	4.2192	0.08
						1/2" Ice	6.2883 6.6592	4.5624 4.9126	0.12 0.17
						1" Ice	7.4219	5.6341	0.28
						2" Ice			
AIR 21 B2A/B4P	C	From Leg	4.0000 0.00 0.00	0.0000	120.0000	No Ice	5.9244	4.2192	0.08
						1/2" Ice	6.2883 6.6592	4.5624 4.9126	0.12 0.17
						1" Ice	7.4219	5.6341	0.28
						2" Ice			
APXVAARR24_43-U-NA20	A	From Leg	4.0000 0.00 0.00	0.0000	120.0000	No Ice	14.6700	5.3200	0.15
						1/2" Ice	15.4300 16.2100	5.9900 6.6800	0.27 0.39
						1" Ice	17.8100	8.0800	0.66
						2" Ice			
APXVAARR24_43-U-NA20	B	From Leg	4.0000 0.00 0.00	0.0000	120.0000	No Ice	14.6700	5.3200	0.15
						1/2" Ice	15.4300 16.2100	5.9900 6.6800	0.27 0.39
						1" Ice	17.8100	8.0800	0.66
						2" Ice			
APXVAARR24_43-U-NA20	C	From Leg	4.0000 0.00 0.00	0.0000	120.0000	No Ice	14.6700	5.3200	0.15
						1/2" Ice	15.4300 16.2100	5.9900 6.6800	0.27 0.39
						1" Ice	17.8100	8.0800	0.66
						2" Ice			
AIR6449 B41	A	From Leg	4.0000 0.00 0.00	0.0000	120.0000	No Ice	5.6822	2.4907	0.10
						1/2" Ice	5.9842 6.2936	2.7180 2.9523	0.14 0.19
						1" Ice	6.9348	3.4420	0.29
						2" Ice			
AIR6449 B41	B	From Leg	4.0000 0.00 0.00	0.0000	120.0000	No Ice	5.6822	2.4907	0.10
						1/2" Ice	5.9842 6.2936	2.7180 2.9523	0.14 0.19
						1" Ice	6.9348	3.4420	0.29
						2" Ice			
AIR6449 B41	C	From Leg	4.0000 0.00 0.00	0.0000	120.0000	No Ice	5.6822	2.4907	0.10
						1/2" Ice	5.9842 6.2936	2.7180 2.9523	0.14 0.19
						1" Ice	6.9348	3.4420	0.29
						2" Ice			

Description	Face or Leg	Offset Type	Offsets: Horz Lateral Vert ft ft ft	Azimuth Adjustment °	Placement ft		C_AA_A Front ft^2	C_AA_A Side ft^2	Weight K
KRY 112 144/1	A	From Leg	4.0000 0.00 0.00	0.0000	120.0000	No Ice 1/2" Ice 1" Ice 2" Ice	0.3500 0.4259 0.5093 0.6981	0.1750 0.2343 0.3009 0.4565	0.01 0.01 0.02 0.03
KRY 112 144/1	B	From Leg	4.0000 0.00 0.00	0.0000	120.0000	No Ice 1/2" Ice 1" Ice 2" Ice	0.3500 0.4259 0.5093 0.6981	0.1750 0.2343 0.3009 0.4565	0.01 0.01 0.02 0.03
KRY 112 144/1	C	From Leg	4.0000 0.00 0.00	0.0000	120.0000	No Ice 1/2" Ice 1" Ice 2" Ice	0.3500 0.4259 0.5093 0.6981	0.1750 0.2343 0.3009 0.4565	0.01 0.01 0.02 0.03
RADIO 4449 B71 B85A_T-MOBILE	A	From Leg	4.0000 0.00 0.00	0.0000	120.0000	No Ice 1/2" Ice 1" Ice 2" Ice	1.9701 2.1466 2.3306 2.7207	1.5865 1.7488 1.9185 2.2800	0.07 0.09 0.12 0.17
RADIO 4449 B71 B85A_T-MOBILE	B	From Leg	4.0000 0.00 0.00	0.0000	120.0000	No Ice 1/2" Ice 1" Ice 2" Ice	1.9701 2.1466 2.3306 2.7207	1.5865 1.7488 1.9185 2.2800	0.07 0.09 0.12 0.17
RADIO 4449 B71 B85A_T-MOBILE	C	From Leg	4.0000 0.00 0.00	0.0000	120.0000	No Ice 1/2" Ice 1" Ice 2" Ice	1.9701 2.1466 2.3306 2.7207	1.5865 1.7488 1.9185 2.2800	0.07 0.09 0.12 0.17
RRUS 4415 B25_CCIV2	A	From Leg	4.0000 0.00 0.00	0.0000	120.0000	No Ice 1/2" Ice 1" Ice 2" Ice	1.8425 2.0123 2.1895 2.5662	0.8202 0.9434 1.0750 1.3683	0.05 0.06 0.08 0.12
RRUS 4415 B25_CCIV2	B	From Leg	4.0000 0.00 0.00	0.0000	120.0000	No Ice 1/2" Ice 1" Ice 2" Ice	1.8425 2.0123 2.1895 2.5662	0.8202 0.9434 1.0750 1.3683	0.05 0.06 0.08 0.12
RRUS 4415 B25_CCIV2	C	From Leg	4.0000 0.00 0.00	0.0000	120.0000	No Ice 1/2" Ice 1" Ice 2" Ice	1.8425 2.0123 2.1895 2.5662	0.8202 0.9434 1.0750 1.3683	0.05 0.06 0.08 0.12
Platform Mount [LP 1301-1]	C	None		0.0000	120.0000	No Ice 1/2" Ice 1" Ice 2" Ice	51.7000 62.7000 73.7000 95.7000	51.7000 62.7000 73.7000 95.7000	2.26 2.94 3.61 4.95
***									
BXA-70063/4CF w/ Mount Pipe	A	From Leg	4.0000 0.00 1.00	0.0000	99.0000	No Ice 1/2" Ice 1" Ice 2" Ice	4.8400 5.3500 5.8800 6.9900	3.5400 4.0300 4.5300 5.5900	0.04 0.08 0.12 0.24
BXA-70063/4CF w/ Mount Pipe	B	From Leg	4.0000 0.00 1.00	0.0000	99.0000	No Ice 1/2" Ice 1" Ice 2" Ice	4.8400 5.3500 5.8800 6.9900	3.5400 4.0300 4.5300 5.5900	0.04 0.08 0.12 0.24
BXA-70063/4CF w/ Mount Pipe	C	From Leg	4.0000 0.00 1.00	0.0000	99.0000	No Ice 1/2" Ice 1" Ice	4.8400 5.3500 5.8800 6.9900	3.5400 4.0300 4.5300 5.5900	0.04 0.08 0.12 0.24

Description	Face or Leg	Offset Type	Offsets: Horz Lateral Vert ft ft ft	Azimuth Adjustment °	Placement ft		C_AA_A Front ft^2	C_AA_A Side ft^2	Weight K
						2" Ice			
CBRS w/ Mount Pipe	A	From Leg	4.0000	0.0000	99.0000	No Ice	1.7135	1.1683	0.03
			0.00			1/2"	1.9342	1.4373	0.05
			1.00			Ice	2.1662	1.7226	0.07
						1" Ice	2.6643	2.3506	0.13
						2" Ice			
CBRS w/ Mount Pipe	B	From Leg	4.0000	0.0000	99.0000	No Ice	1.7135	1.1683	0.03
			0.00			1/2"	1.9342	1.4373	0.05
			1.00			Ice	2.1662	1.7226	0.07
						1" Ice	2.6643	2.3506	0.13
						2" Ice			
CBRS w/ Mount Pipe	C	From Leg	4.0000	0.0000	99.0000	No Ice	1.7135	1.1683	0.03
			0.00			1/2"	1.9342	1.4373	0.05
			1.00			Ice	2.1662	1.7226	0.07
						1" Ice	2.6643	2.3506	0.13
						2" Ice			
(2) JAHH-65A-R3B w/ Mount Pipe	A	From Leg	4.0000	0.0000	99.0000	No Ice	3.3500	2.6100	0.07
			0.00			1/2"	3.6400	2.8900	0.13
			1.00			Ice	3.9500	3.1800	0.19
						1" Ice	4.5900	3.7900	0.35
						2" Ice			
(2) JAHH-65A-R3B w/ Mount Pipe	B	From Leg	4.0000	0.0000	99.0000	No Ice	3.3500	2.6100	0.07
			0.00			1/2"	3.6400	2.8900	0.13
			1.00			Ice	3.9500	3.1800	0.19
						1" Ice	4.5900	3.7900	0.35
						2" Ice			
(2) JAHH-65A-R3B w/ Mount Pipe	C	From Leg	4.0000	0.0000	99.0000	No Ice	3.3500	2.6100	0.07
			0.00			1/2"	3.6400	2.8900	0.13
			1.00			Ice	3.9500	3.1800	0.19
						1" Ice	4.5900	3.7900	0.35
						2" Ice			
CBC78T-DS-43-2X	A	From Leg	4.0000	0.0000	99.0000	No Ice	0.3680	0.5120	0.02
			0.00			1/2"	0.4456	0.6046	0.03
			1.00			Ice	0.5306	0.7046	0.04
						1" Ice	0.7228	0.9268	0.06
						2" Ice			
(2) CBC78T-DS-43-2X	C	From Leg	4.0000	0.0000	99.0000	No Ice	0.3680	0.5120	0.02
			0.00			1/2"	0.4456	0.6046	0.03
			1.00			Ice	0.5306	0.7046	0.04
						1" Ice	0.7228	0.9268	0.06
						2" Ice			
(3) RFV01U-D1A	A	From Leg	4.0000	0.0000	99.0000	No Ice	1.8750	1.2500	0.08
			0.00			1/2"	2.0454	1.3926	0.10
			1.00			Ice	2.2231	1.5426	0.12
						1" Ice	2.6009	1.8648	0.18
						2" Ice			
RFV01U-D2A	A	From Leg	4.0000	0.0000	99.0000	No Ice	1.8750	1.0125	0.07
			0.00			1/2"	2.0454	1.1445	0.09
			1.00			Ice	2.2231	1.2840	0.11
						1" Ice	2.6009	1.5851	0.15
						2" Ice			
(2) RFV01U-D2A	B	From Leg	4.0000	0.0000	99.0000	No Ice	1.8750	1.0125	0.07
			0.00			1/2"	2.0454	1.1445	0.09
			1.00			Ice	2.2231	1.2840	0.11
						1" Ice	2.6009	1.5851	0.15
						2" Ice			
(2) 20W CBRS	B	From Leg	4.0000	0.0000	99.0000	No Ice	0.8571	0.4203	0.02
			0.00			1/2"	0.9752	0.5105	0.03
			1.00			Ice	1.1008	0.6082	0.03
						1" Ice	1.3741	0.8327	0.06
						2" Ice			
20W CBRS	C	From Leg	4.0000	0.0000	99.0000	No Ice	0.8571	0.4203	0.02
			0.00			1/2"	0.9752	0.5105	0.03
			1.00			Ice	1.1008	0.6082	0.03
						1" Ice	1.3741	0.8327	0.06

Description	Face or Leg	Offset Type	Offsets: Horz Lateral Vert ft ft ft	Azimuth Adjustment °	Placement ft		C_AA_A Front ft^2	C_AA_A Side ft^2	Weight K
						2" Ice			
DB-C1-12C-24AB-0Z	C	From Leg	4.0000 0.00 1.00	0.0000	99.0000	No Ice	4.0563	3.0975	0.03
						1/2" Ice	4.3155	3.3351	0.07
						1" Ice	4.5822	3.5801	0.11
						2" Ice	5.1377	4.0923	0.20
T-Arm Mount [TA 602-3]	C	None		0.0000	99.0000	No Ice	14.5167	14.5167	0.83
						1/2" Ice	17.8100	17.8100	1.08
						1" Ice	21.1033	21.1033	1.33
						2" Ice	27.6899	27.6899	1.83
***									
Bridge Stiffener (76" x 10.5" x 1.25")	A	From Leg	0.0000 0.00 0.00	0.0000	109.5000	No Ice	1.3194	7.8023	0.28
						1/2" Ice	2.0409	8.2878	0.31
						1" Ice	2.7747	8.7656	0.35
						2" Ice	3.9288	9.7423	0.45
Bridge Stiffener (76" x 10.5" x 1.25")	B	From Leg	0.0000 0.00 0.00	0.0000	109.5000	No Ice	1.3194	7.8023	0.28
						1/2" Ice	2.0409	8.2878	0.31
						1" Ice	2.7747	8.7656	0.35
						2" Ice	3.9288	9.7423	0.45
Bridge Stiffener (76" x 10.5" x 1.25")	C	From Leg	0.0000 0.00 0.00	0.0000	109.5000	No Ice	1.3194	7.8023	0.28
						1/2" Ice	2.0409	8.2878	0.31
						1" Ice	2.7747	8.7656	0.35
						2" Ice	3.9288	9.7423	0.45
***									

Dishes

Description	Face or Leg	Dish Type	Offset Type	Offsets: Horz Lateral Vert ft	Azimuth Adjustment °	3 dB Beam Width °	Elevation ft	Outside Diameter ft		Aperture Area ft^2	Weight K
VHLP2-23	B	Paraboloid w/Shroud (HP)	From Leg	4.0000 0.00 5.00	0.0000		138.0000	2.1750	No Ice	3.7200	0.03
									1/2" Ice	4.0100	0.05
									1" Ice	4.3000	0.07
									2" Ice	4.8800	0.11
VHLP2-18	C	Paraboloid w/Shroud (HP)	From Leg	4.0000 0.00 5.00	0.0000		138.0000	2.1750	No Ice	3.7200	0.03
									1/2" Ice	4.0100	0.05
									1" Ice	4.3000	0.07
									2" Ice	4.8800	0.11

Tower Pressures - No Ice

G_H = 1.100

Section Elevation ft	z ft	K_Z	q_z psf	A_G ft^2	Face	A_F ft^2	A_R ft^2	A_{leg} ft^2	Leg %	C_AA_A In Face ft^2	C_AA_A Out Face ft^2
L1 150.0000-145.0000	147.4802	1.104	39.519	6.596	A	0.000	6.596	6.596	100.00	0.000	0.000
					B	0.000	6.596		100.00	0.000	0.000
					C	0.000	6.596		100.00	1.667	0.000
L2 145.0000-140.0000	142.4811	1.093	39.131	6.912	A	0.000	6.912	6.912	100.00	0.000	0.000
					B	0.000	6.912		100.00	0.000	0.000
					C	0.000	6.912		100.00	1.667	0.000
L3 140.0000-135.0000	137.4819	1.082	38.734	7.227	A	0.000	7.227	7.227	100.00	0.000	0.000
					B	0.000	7.227		100.00	1.983	0.000
					C	0.000	7.227		100.00	1.667	0.000

Section Elevation ft	z ft	K_Z	q_z psf	A_G ft^2	Face	A_F ft^2	A_R ft^2	A_{leg} ft^2	Leg %	C_AA_A In Face ft^2	C_AA_A Out Face ft^2
L4 135.0000-130.0000	132.4826	1.071	38.326	7.543	A	0.000	7.543	7.543	100.00	0.000	0.000
					B	0.000	7.543		100.00	3.305	0.000
					C	0.000	7.543		100.00	1.667	0.000
L5 130.0000-128.5000	129.2485	1.063	38.056	2.324	A	0.000	2.324	2.324	100.00	0.050	0.000
					B	0.000	2.324		100.00	1.017	0.000
					C	0.000	2.324		100.00	0.525	0.000
L6 128.5000-128.2500	128.3750	1.061	37.983	0.387	A	0.000	0.387	0.387	100.00	0.008	0.000
					B	0.000	0.387		100.00	0.169	0.000
					C	0.000	0.387		100.00	0.087	0.000
L7 128.2500-123.2500	125.7336	1.055	37.758	7.907	A	0.000	7.907	7.907	100.00	0.167	0.000
					B	0.000	7.907		100.00	3.388	0.000
					C	0.000	7.907		100.00	1.750	0.000
L8 123.2500-118.2500	120.7342	1.043	37.323	8.226	A	0.000	8.226	8.226	100.00	0.167	0.000
					B	0.000	8.226		100.00	3.388	0.000
					C	0.000	8.226		100.00	3.465	0.000
L9 118.2500-113.2500	115.7348	1.03	36.874	8.543	A	0.000	8.543	8.543	100.00	0.167	0.000
					B	0.000	8.543		100.00	3.388	0.000
					C	0.000	8.543		100.00	6.650	0.000
L10 113.2500-109.0000	111.1144	1.018	36.448	7.512	A	0.000	7.512	7.512	100.00	0.125	0.000
					B	0.000	7.512		100.00	2.872	0.000
					C	0.000	7.512		100.00	5.644	0.000
L11 109.0000-108.7500	108.8750	1.013	36.236	0.448	A	0.000	0.448	0.448	100.00	0.008	0.000
					B	0.000	0.448		100.00	0.169	0.000
					C	0.000	0.448		100.00	0.333	0.000
L12 108.7500-104.1700	106.4477	1.006	36.004	8.355	A	0.000	8.355	8.355	100.00	0.924	0.000
					B	0.000	8.355		100.00	4.647	0.000
					C	0.000	8.355		100.00	6.863	0.000
L13 104.1700-103.9200	104.0450	0.999	35.770	0.462	A	0.000	0.462	0.462	100.00	0.051	0.000
					B	0.000	0.462		100.00	0.255	0.000
					C	0.000	0.462		100.00	0.375	0.000
L14 103.9200-103.1700	103.5447	0.998	35.720	1.391	A	0.000	1.391	1.391	100.00	0.154	0.000
					B	0.000	1.391		100.00	0.766	0.000
					C	0.000	1.391		100.00	1.126	0.000
L15 103.1700-102.9200	103.0450	0.997	35.671	0.464	A	0.000	0.464	0.464	100.00	0.051	0.000
					B	0.000	0.464		100.00	0.255	0.000
					C	0.000	0.464		100.00	0.375	0.000
L16 102.9200-102.4200	102.6699	0.996	35.634	0.931	A	0.000	0.931	0.931	100.00	0.102	0.000
					B	0.000	0.931		100.00	0.510	0.000
					C	0.000	0.931		100.00	0.751	0.000
L17 102.4200-102.1700	102.2950	0.995	35.597	0.468	A	0.000	0.468	0.468	100.00	0.051	0.000
					B	0.000	0.468		100.00	0.255	0.000
					C	0.000	0.468		100.00	0.375	0.000
L18 102.1700-100.9200	101.5441	0.993	35.522	2.352	A	0.000	2.352	2.352	100.00	0.256	0.000
					B	0.000	2.352		100.00	1.276	0.000
					C	0.000	2.352		100.00	1.877	0.000
L19 100.9200-100.6700	100.7950	0.99	35.447	0.472	A	0.000	0.472	0.472	100.00	0.051	0.000
					B	0.000	0.472		100.00	0.255	0.000
					C	0.000	0.472		100.00	0.375	0.000
L20 100.6700-99.5800	100.1243	0.989	35.379	2.069	A	0.000	2.069	2.069	100.00	0.223	0.000
					B	0.000	2.069		100.00	1.128	0.000
					C	0.000	2.069		100.00	1.637	0.000
L21 99.5800-99.3300	99.4550	0.987	35.311	0.474	A	0.000	0.474	0.474	100.00	0.051	0.000
					B	0.000	0.474		100.00	0.259	0.000
					C	0.000	0.474		100.00	0.375	0.000
L22 99.3300-95.2500	97.2808	0.98	35.089	7.855	A	0.000	7.855	7.855	100.00	0.790	0.000
					B	0.000	7.855		100.00	5.672	0.000
					C	0.000	7.855		100.00	6.126	0.000
L23 95.2500-95.0000	95.1250	0.974	34.865	0.491	A	0.000	0.491	0.491	100.00	0.047	0.000
					B	0.000	0.491		100.00	0.354	0.000
					C	0.000	0.491		100.00	0.375	0.000
L24 95.0000-90.0000	92.4866	0.966	34.586	9.986	A	0.000	9.986	9.986	100.00	0.883	0.000
					B	0.000	9.986		100.00	7.026	0.000
					C	0.000	9.986		100.00	7.450	0.000
L25 90.0000-85.0000	87.4870	0.951	34.041	10.318	A	0.000	10.318	10.318	100.00	0.858	0.000
					B	0.000	10.318		100.00	7.001	0.000
					C	0.000	10.318		100.00	7.425	0.000
L26 85.0000-80.5000	82.7398	0.936	33.503	9.569	A	0.000	9.569	9.569	100.00	0.375	0.000
					B	0.000	9.569		100.00	5.482	0.000

Section Elevation ft	z ft	K_Z	q_z psf	A_G ft^2	Face	A_F ft^2	A_R ft^2	A_{leg} ft^2	Leg %	C_AA_A In Face ft^2	C_AA_A Out Face ft^2
					C	0.000	9.569		100.00	6.310	0.000
L27 80.5000-80.2500	80.3750	0.928	33.226	0.537	A	0.000	0.537	0.537	100.00	0.008	0.000
					B	0.000	0.537		100.00	0.277	0.000
					C	0.000	0.537		100.00	0.341	0.000
L28 80.2500-75.2500	77.7378	0.92	32.911	10.910	A	0.000	10.910	10.910	100.00	0.167	0.000
					B	0.000	10.910		100.00	5.535	0.000
					C	0.000	10.910		100.00	6.817	0.000
L29 75.2500-73.5800	74.4137	0.908	32.503	3.718	A	0.000	3.718	3.718	100.00	0.056	0.000
					B	0.000	3.718		100.00	1.849	0.000
					C	0.000	3.718		100.00	2.277	0.000
L30 73.5800-73.3300	73.4550	0.905	32.383	0.560	A	0.000	0.560	0.560	100.00	0.008	0.000
					B	0.000	0.560		100.00	0.277	0.000
					C	0.000	0.560		100.00	0.341	0.000
L31 73.3300-69.0000	71.1562	0.897	32.090	9.826	A	0.000	9.826	9.826	100.00	0.144	0.000
					B	0.000	9.826		100.00	4.793	0.000
					C	0.000	9.826		100.00	5.903	0.000
L32 69.0000-67.0000	67.9980	0.885	31.676	4.539	A	0.000	4.539	4.539	100.00	0.133	0.000
					B	0.000	4.539		100.00	2.247	0.000
					C	0.000	4.539		100.00	2.760	0.000
L33 67.0000-66.7500	66.8750	0.881	31.526	0.571	A	0.000	0.571	0.571	100.00	0.017	0.000
					B	0.000	0.571		100.00	0.281	0.000
					C	0.000	0.571		100.00	0.345	0.000
L34 66.7500-66.5000	66.6250	0.88	31.492	0.571	A	0.000	0.571	0.571	100.00	0.017	0.000
					B	0.000	0.571		100.00	0.281	0.000
					C	0.000	0.571		100.00	0.345	0.000
L35 66.5000-61.5000	63.9877	0.87	31.131	11.619	A	0.000	11.619	11.619	100.00	0.250	0.000
					B	0.000	11.619		100.00	5.535	0.000
					C	0.000	11.619		100.00	6.733	0.000
L36 61.5000-56.5000	58.9880	0.85	30.416	11.976	A	0.000	11.976	11.976	100.00	0.250	0.000
					B	0.000	11.976		100.00	5.535	0.000
					C	0.000	11.976		100.00	6.733	0.000
L37 56.5000-51.5000	53.9884	0.829	29.656	12.329	A	0.000	12.329	12.329	100.00	0.250	0.000
					B	0.000	12.329		100.00	5.535	0.000
					C	0.000	12.329		100.00	6.733	0.000
L38 51.5000-48.2500	49.8702	0.81	28.991	8.203	A	0.000	8.203	8.203	100.00	0.850	0.000
					B	0.000	8.203		100.00	4.285	0.000
					C	0.000	8.203		100.00	5.752	0.000
L39 48.2500-48.0000	48.1250	0.802	28.697	0.634	A	0.000	0.634	0.634	100.00	0.075	0.000
					B	0.000	0.634		100.00	0.339	0.000
					C	0.000	0.634		100.00	0.462	0.000
L40 48.0000-44.2500	46.1187	0.792	28.350	9.618	A	0.000	9.618	9.618	100.00	1.125	0.000
					B	0.000	9.618		100.00	5.089	0.000
					C	0.000	9.618		100.00	6.925	0.000
L41 44.2500-44.0000	44.1250	0.782	27.995	0.647	A	0.000	0.647	0.647	100.00	0.075	0.000
					B	0.000	0.647		100.00	0.339	0.000
					C	0.000	0.647		100.00	0.462	0.000
L42 44.0000-43.0800	43.5396	0.779	27.888	2.390	A	0.000	2.390	2.390	100.00	0.276	0.000
					B	0.000	2.390		100.00	1.248	0.000
					C	0.000	2.390		100.00	1.699	0.000
L43 43.0800-42.8300	42.9550	0.776	27.780	0.652	A	0.000	0.652	0.652	100.00	0.075	0.000
					B	0.000	0.652		100.00	0.339	0.000
					C	0.000	0.652		100.00	0.462	0.000
L44 42.8300-37.8300	40.3192	0.762	27.282	13.225	A	0.000	13.225	13.225	100.00	1.500	0.000
					B	0.000	13.225		100.00	6.785	0.000
					C	0.000	13.225		100.00	9.233	0.000
L45 37.8300-30.0000	33.8893	0.725	25.961	21.418	A	0.000	21.418	21.418	100.00	2.349	0.000
					B	0.000	21.418		100.00	10.625	0.000
					C	0.000	21.418		100.00	14.459	0.000
L46 30.0000-29.0000	29.4996	0.7	25.051	2.743	A	0.000	2.743	2.743	100.00	0.300	0.000
					B	0.000	2.743		100.00	1.357	0.000
					C	0.000	2.743		100.00	1.847	0.000
L47 29.0000-24.0000	26.4893	0.7	25.051	13.942	A	0.000	13.942	13.942	100.00	1.500	0.000
					B	0.000	13.942		100.00	6.785	0.000
					C	0.000	13.942		100.00	9.233	0.000
L48 24.0000-23.7500	23.8750	0.7	25.051	0.707	A	0.000	0.707	0.707	100.00	0.075	0.000
					B	0.000	0.707		100.00	0.339	0.000
					C	0.000	0.707		100.00	0.462	0.000

Section Elevation ft	z ft	K_Z	q_z psf	A_G ft^2	Face	A_F ft^2	A_R ft^2	A_{leg} ft^2	Leg %	C_AA_A In Face ft^2	C_AA_A Out Face ft^2
L49 23.7500-23.5000	23.6250	0.7	25.051	0.708	A	0.000	0.708	0.708	100.00	0.075	0.000
					B	0.000	0.708		100.00	0.339	0.000
					C	0.000	0.708		100.00	0.462	0.000
L50 23.5000-18.5000	20.9896	0.7	25.051	14.350	A	0.000	14.350	14.350	100.00	1.500	0.000
					B	0.000	14.350		100.00	6.785	0.000
					C	0.000	14.350		100.00	9.233	0.000
L51 18.5000-13.5000	15.9898	0.7	25.051	14.721	A	0.000	14.721	14.721	100.00	1.500	0.000
					B	0.000	14.721		100.00	6.785	0.000
					C	0.000	14.721		100.00	9.233	0.000
L52 13.5000-11.0000	12.2475	0.7	25.051	7.499	A	0.000	7.499	7.499	100.00	0.750	0.000
					B	0.000	7.499		100.00	3.393	0.000
					C	0.000	7.499		100.00	4.617	0.000
L53 11.0000-10.7500	10.8750	0.7	25.051	0.757	A	0.000	0.757	0.757	100.00	0.075	0.000
					B	0.000	0.757		100.00	0.339	0.000
					C	0.000	0.757		100.00	0.462	0.000
L54 10.7500-6.0000	8.3662	0.7	25.051	14.555	A	0.000	14.555	14.555	100.00	1.425	0.000
					B	0.000	14.555		100.00	6.404	0.000
					C	0.000	14.555		100.00	8.730	0.000
L55 6.0000-5.7500	5.8750	0.7	25.051	0.773	A	0.000	0.773	0.773	100.00	0.075	0.000
					B	0.000	0.773		100.00	0.335	0.000
					C	0.000	0.773		100.00	0.457	0.000
L56 5.7500-3.2500	4.4976	0.7	25.051	7.783	A	0.000	7.783	7.783	100.00	0.746	0.000
					B	0.000	7.783		100.00	3.347	0.000
					C	0.000	7.783		100.00	4.575	0.000
L57 3.2500-3.0000	3.1250	0.7	25.051	0.786	A	0.000	0.786	0.786	100.00	0.071	0.000
					B	0.000	0.786		100.00	0.331	0.000
					C	0.000	0.786		100.00	0.457	0.000
L58 3.0000-0.0000	1.4966	0.7	25.051	9.504	A	0.000	9.504	9.504	100.00	0.850	0.000
					B	0.000	9.504		100.00	3.971	0.000
					C	0.000	9.504		100.00	5.490	0.000

Tower Pressure - With Ice

G_H = 1.100

Section Elevation ft	z ft	K_Z	q_z psf	t_Z in	A_G ft^2	Face	A_F ft^2	A_R ft^2	A_{leg} ft^2	Leg %	C_AA_A In Face ft^2	C_AA_A Out Face ft^2
L1 150.0000-145.0000	147.4802	1.104	6.323	1.4809	7.830	A	0.000	7.830	7.830	100.00	0.000	0.000
						B	0.000	7.830		100.00	0.000	0.000
						C	0.000	7.830		100.00	3.148	0.000
L2 145.0000-140.0000	142.4811	1.093	6.261	1.4758	8.142	A	0.000	8.142	8.142	100.00	0.000	0.000
						B	0.000	8.142		100.00	0.000	0.000
						C	0.000	8.142		100.00	3.142	0.000
L3 140.0000-135.0000	137.4819	1.082	6.197	1.4706	8.453	A	0.000	8.453	8.453	100.00	0.000	0.000
						B	0.000	8.453		100.00	4.315	0.000
						C	0.000	8.453		100.00	3.137	0.000
L4 135.0000-130.0000	132.4826	1.071	6.132	1.4651	8.764	A	0.000	8.764	8.764	100.00	0.000	0.000
						B	0.000	8.764		100.00	7.179	0.000
						C	0.000	8.764		100.00	3.132	0.000
L5 130.0000-128.5000	129.2485	1.063	6.089	1.4615	2.690	A	0.000	2.690	2.690	100.00	0.927	0.000
						B	0.000	2.690		100.00	2.615	0.000
						C	0.000	2.690		100.00	1.402	0.000
L6 128.5000-128.2500	128.3750	1.061	6.077	1.4605	0.448	A	0.000	0.448	0.448	100.00	0.154	0.000
						B	0.000	0.448		100.00	0.436	0.000
						C	0.000	0.448		100.00	0.234	0.000
L7 128.2500-123.2500	125.7336	1.055	6.041	1.4575	9.121	A	0.000	9.121	9.121	100.00	3.082	0.000
						B	0.000	9.121		100.00	8.703	0.000
						C	0.000	9.121		100.00	4.665	0.000
L8 123.2500-118.2500	120.7342	1.043	5.972	1.4516	9.436	A	0.000	9.436	9.436	100.00	3.070	0.000
						B	0.000	9.436		100.00	8.683	0.000
						C	0.000	9.436		100.00	7.432	0.000
L9 118.2500-113.2500	115.7348	1.03	5.900	1.4455	9.748	A	0.000	9.748	9.748	100.00	3.058	0.000
						B	0.000	9.748		100.00	8.664	0.000
						C	0.000	9.748		100.00	12.573	0.000

Section Elevation ft	z ft	K_Z	q_z psf	t_Z in	A_G ft^2	Face	A_F ft^2	A_R ft^2	A_{leg} ft^2	Leg %	C_AA_A In Face ft^2	C_AA_A Out Face ft^2
L10 113.2500-109.0000	111.1144	1.018	5.832	1.4396	8.531	A	0.000	8.531	8.531	100.00	2.284	0.000
						B	0.000	8.531		100.00	7.196	0.000
						C	0.000	8.531		100.00	10.518	0.000
L11 109.0000-108.7500	108.8750	1.013	5.798	1.4367	0.508	A	0.000	0.508	0.508	100.00	0.152	0.000
						B	0.000	0.508		100.00	0.432	0.000
						C	0.000	0.508		100.00	0.627	0.000
L12 108.7500-104.1700	106.4477	1.006	5.761	1.4334	9.449	A	0.000	9.449	9.449	100.00	4.839	0.000
						B	0.000	9.449		100.00	12.022	0.000
						C	0.000	9.449		100.00	13.542	0.000
L13 104.1700-103.9200	104.0450	0.999	5.723	1.4301	0.521	A	0.000	0.521	0.521	100.00	0.266	0.000
						B	0.000	0.521		100.00	0.659	0.000
						C	0.000	0.521		100.00	0.741	0.000
L14 103.9200-103.1700	103.5447	0.998	5.715	1.4295	1.570	A	0.000	1.570	1.570	100.00	0.797	0.000
						B	0.000	1.570		100.00	1.978	0.000
						C	0.000	1.570		100.00	2.221	0.000
L15 103.1700-102.9200	103.0450	0.997	5.707	1.4288	0.524	A	0.000	0.524	0.524	100.00	0.266	0.000
						B	0.000	0.524		100.00	0.659	0.000
						C	0.000	0.524		100.00	0.740	0.000
L16 102.9200-102.4200	102.6699	0.996	5.701	1.4282	1.050	A	0.000	1.050	1.050	100.00	0.531	0.000
						B	0.000	1.050		100.00	1.318	0.000
						C	0.000	1.050		100.00	1.480	0.000
L17 102.4200-102.1700	102.2950	0.995	5.695	1.4277	0.527	A	0.000	0.527	0.527	100.00	0.265	0.000
						B	0.000	0.527		100.00	0.659	0.000
						C	0.000	0.527		100.00	0.740	0.000
L18 102.1700-100.9200	101.5441	0.993	5.683	1.4267	2.649	A	0.000	2.649	2.649	100.00	1.326	0.000
						B	0.000	2.649		100.00	3.293	0.000
						C	0.000	2.649		100.00	3.699	0.000
L19 100.9200-100.6700	100.7950	0.99	5.671	1.4256	0.532	A	0.000	0.532	0.532	100.00	0.265	0.000
						B	0.000	0.532		100.00	0.658	0.000
						C	0.000	0.532		100.00	0.740	0.000
L20 100.6700-99.5800	100.1243	0.989	5.661	1.4247	2.328	A	0.000	2.328	2.328	100.00	1.155	0.000
						B	0.000	2.328		100.00	3.128	0.000
						C	0.000	2.328		100.00	3.224	0.000
L21 99.5800-99.3300	99.4550	0.987	5.650	1.4237	0.533	A	0.000	0.533	0.533	100.00	0.265	0.000
						B	0.000	0.533		100.00	0.728	0.000
						C	0.000	0.533		100.00	0.739	0.000
L22 99.3300-95.2500	97.2808	0.98	5.614	1.4206	8.821	A	0.000	8.821	8.821	100.00	3.486	0.000
						B	0.000	8.821		100.00	14.229	0.000
						C	0.000	8.821		100.00	12.053	0.000
L23 95.2500-95.0000	95.1250	0.974	5.578	1.4174	0.550	A	0.000	0.550	0.550	100.00	0.189	0.000
						B	0.000	0.550		100.00	0.864	0.000
						C	0.000	0.550		100.00	0.738	0.000
L24 95.0000-90.0000	92.4866	0.966	5.534	1.4134	11.164	A	0.000	11.164	11.164	100.00	2.720	0.000
						B	0.000	11.164		100.00	16.267	0.000
						C	0.000	11.164		100.00	13.692	0.000
L25 90.0000-85.0000	87.4870	0.951	5.447	1.4056	11.489	A	0.000	11.489	11.489	100.00	2.263	0.000
						B	0.000	11.489		100.00	15.804	0.000
						C	0.000	11.489		100.00	13.218	0.000
L26 85.0000-80.5000	82.7398	0.936	5.360	1.3978	10.618	A	0.000	10.618	10.618	100.00	2.053	0.000
						B	0.000	10.618		100.00	13.786	0.000
						C	0.000	10.618		100.00	12.340	0.000
L27 80.5000-80.2500	80.3750	0.928	5.316	1.3937	0.595	A	0.000	0.595	0.595	100.00	0.148	0.000
						B	0.000	0.595		100.00	0.783	0.000
						C	0.000	0.595		100.00	0.768	0.000
L28 80.2500-75.2500	77.7378	0.92	5.266	1.3891	12.068	A	0.000	12.068	12.068	100.00	2.945	0.000
						B	0.000	12.068		100.00	15.636	0.000
						C	0.000	12.068		100.00	15.334	0.000
L29 75.2500-73.5800	74.4137	0.908	5.200	1.3830	4.103	A	0.000	4.103	4.103	100.00	0.980	0.000
						B	0.000	4.103		100.00	5.209	0.000
						C	0.000	4.103		100.00	5.111	0.000
L30 73.5800-73.3300	73.4550	0.905	5.181	1.3812	0.617	A	0.000	0.617	0.617	100.00	0.146	0.000
						B	0.000	0.617		100.00	0.779	0.000
						C	0.000	0.617		100.00	0.765	0.000
L31 73.3300-69.0000	71.1562	0.897	5.134	1.3768	10.820	A	0.000	10.820	10.820	100.00	2.529	0.000
						B	0.000	10.820		100.00	13.472	0.000
						C	0.000	10.820		100.00	13.224	0.000
L32 69.0000-67.0000	67.9980	0.885	5.068	1.3706	4.998	A	0.000	4.998	4.998	100.00	2.336	0.000
						B	0.000	4.998		100.00	6.807	0.000

Section Elevation ft	z ft	K_Z	q_z psf	t_Z in	A_G ft^2	Face	A_F ft^2	A_R ft^2	A_{leg} ft^2	Leg %	C_AA_A In Face ft^2	C_AA_A Out Face ft^2
						C	0.000	4.998		100.00	6.692	0.000
L33 67.0000-	66.8750	0.881	5.044	1.3683	0.628	A	0.000	0.628	0.628	100.00	0.290	0.000
66.7500						B	0.000	0.628		100.00	0.848	0.000
						C	0.000	0.628		100.00	0.834	0.000
L34 66.7500-	66.6250	0.88	5.039	1.3678	0.628	A	0.000	0.628	0.628	100.00	0.290	0.000
66.5000						B	0.000	0.628		100.00	0.847	0.000
						C	0.000	0.628		100.00	0.834	0.000
L35 66.5000-	63.9877	0.87	4.981	1.3623	12.754	A	0.000	12.754	12.754	100.00	4.337	0.000
61.5000						B	0.000	12.754		100.00	15.462	0.000
						C	0.000	12.754		100.00	13.748	0.000
L36 61.5000-	58.9880	0.85	4.866	1.3512	13.102	A	0.000	13.102	13.102	100.00	4.304	0.000
56.5000						B	0.000	13.102		100.00	15.391	0.000
						C	0.000	13.102		100.00	13.701	0.000
L37 56.5000-	53.9884	0.829	4.745	1.3393	13.445	A	0.000	13.445	13.445	100.00	4.268	0.000
51.5000						B	0.000	13.445		100.00	15.313	0.000
						C	0.000	13.445		100.00	13.651	0.000
L38 51.5000-	49.8702	0.81	4.639	1.3287	8.923	A	0.000	8.923	8.923	100.00	4.172	0.000
48.2500						B	0.000	8.923		100.00	11.327	0.000
						C	0.000	8.923		100.00	11.680	0.000
L39 48.2500-	48.1250	0.802	4.592	1.3240	0.689	A	0.000	0.689	0.689	100.00	0.340	0.000
48.0000						B	0.000	0.689		100.00	0.889	0.000
						C	0.000	0.689		100.00	0.937	0.000
L40 48.0000-	46.1187	0.792	4.536	1.3184	10.442	A	0.000	10.442	10.442	100.00	5.080	0.000
44.2500						B	0.000	10.442		100.00	13.309	0.000
						C	0.000	10.442		100.00	14.024	0.000
L41 44.2500-	44.1250	0.782	4.479	1.3126	0.702	A	0.000	0.702	0.702	100.00	0.338	0.000
44.0000						B	0.000	0.702		100.00	0.885	0.000
						C	0.000	0.702		100.00	0.933	0.000
L42 44.0000-	43.5396	0.779	4.462	1.3108	2.591	A	0.000	2.591	2.591	100.00	1.241	0.000
43.0800						B	0.000	2.591		100.00	3.255	0.000
						C	0.000	2.591		100.00	3.432	0.000
L43 43.0800-	42.9550	0.776	4.445	1.3091	0.706	A	0.000	0.706	0.706	100.00	0.337	0.000
42.8300						B	0.000	0.706		100.00	0.884	0.000
						C	0.000	0.706		100.00	0.932	0.000
L44 42.8300-	40.3192	0.762	4.365	1.3008	14.309	A	0.000	14.309	14.309	100.00	6.703	0.000
37.8300						B	0.000	14.309		100.00	17.613	0.000
						C	0.000	14.309		100.00	18.588	0.000
L45 37.8300-	33.8893	0.725	4.154	1.2784	23.087	A	0.000	23.087	23.087	100.00	10.357	0.000
30.0000						B	0.000	23.087		100.00	27.320	0.000
						C	0.000	23.087		100.00	28.890	0.000
L46 30.0000-	29.4996	0.7	4.008	1.2608	2.956	A	0.000	2.956	2.956	100.00	1.323	0.000
29.0000						B	0.000	2.956		100.00	3.489	0.000
						C	0.000	2.956		100.00	3.690	0.000
L47 29.0000-	26.4893	0.7	4.008	1.2473	14.981	A	0.000	14.981	14.981	100.00	6.489	0.000
24.0000						B	0.000	14.981		100.00	17.212	0.000
						C	0.000	14.981		100.00	18.254	0.000
L48 24.0000-	23.8750	0.7	4.008	1.2344	0.758	A	0.000	0.758	0.758	100.00	0.322	0.000
23.7500						B	0.000	0.758		100.00	0.856	0.000
						C	0.000	0.758		100.00	0.909	0.000
L49 23.7500-	23.6250	0.7	4.008	1.2331	0.759	A	0.000	0.759	0.759	100.00	0.322	0.000
23.5000						B	0.000	0.759		100.00	0.855	0.000
						C	0.000	0.759		100.00	0.908	0.000
L50 23.5000-	20.9896	0.7	4.008	1.2186	15.365	A	0.000	15.365	15.365	100.00	6.374	0.000
18.5000						B	0.000	15.365		100.00	16.997	0.000
						C	0.000	15.365		100.00	18.075	0.000
L51 18.5000-	15.9898	0.7	4.008	1.1859	15.710	A	0.000	15.710	15.710	100.00	6.244	0.000
13.5000						B	0.000	15.710		100.00	16.752	0.000
						C	0.000	15.710		100.00	17.870	0.000
L52 13.5000-	12.2475	0.7	4.008	1.1547	7.980	A	0.000	7.980	7.980	100.00	3.059	0.000
11.0000						B	0.000	7.980		100.00	8.259	0.000
						C	0.000	7.980		100.00	8.838	0.000
L53 11.0000-	10.8750	0.7	4.008	1.1410	0.805	A	0.000	0.805	0.805	100.00	0.303	0.000
10.7500						B	0.000	0.805		100.00	0.821	0.000
						C	0.000	0.805		100.00	0.879	0.000
L54 10.7500-	8.3662	0.7	4.008	1.1115	15.435	A	0.000	15.435	15.435	100.00	5.649	0.000
6.0000						B	0.000	15.435		100.00	14.787	0.000
						C	0.000	15.435		100.00	15.938	0.000

Section Elevation ft	z ft	K_Z	q_z psf	t_Z in	A_G ft^2	Face	A_F ft^2	A_R ft^2	A_{leg} ft^2	Leg %	C_AA_A In Face ft^2	C_AA_A Out Face ft^2
L55 6.0000-5.7500	5.8750	0.7	4.008	1.0729	0.818	A	0.000	0.818	0.818	100.00	0.290	0.000
						B	0.000	0.818		100.00	0.737	0.000
						C	0.000	0.818		100.00	0.800	0.000
L56 5.7500-3.2500	4.4976	0.7	4.008	1.0446	8.219	A	0.000	8.219	8.219	100.00	2.783	0.000
						B	0.000	8.219		100.00	7.226	0.000
						C	0.000	8.219		100.00	7.930	0.000
L57 3.2500-3.0000	3.1250	0.7	4.008	1.0073	0.828	A	0.000	0.828	0.828	100.00	0.222	0.000
						B	0.000	0.828		100.00	0.662	0.000
						C	0.000	0.828		100.00	0.783	0.000
L58 3.0000-0.0000	1.4966	0.7	4.008	0.9358	9.972	A	0.000	9.972	9.972	100.00	2.534	0.000
						B	0.000	9.972		100.00	7.703	0.000
						C	0.000	9.972		100.00	9.173	0.000

Tower Pressure - Service

G_H = 1.100

Section Elevation ft	z ft	K_Z	q_z psf	A_G ft^2	Face	A_F ft^2	A_R ft^2	A_{leg} ft^2	Leg %	C_AA_A In Face ft^2	C_AA_A Out Face ft^2
L1 150.0000-145.0000	147.4802	1.104	8.575	6.596	A	0.000	6.596	6.596	100.00	0.000	0.000
					B	0.000	6.596		100.00	0.000	0.000
					C	0.000	6.596		100.00	1.667	0.000
L2 145.0000-140.0000	142.4811	1.093	8.491	6.912	A	0.000	6.912	6.912	100.00	0.000	0.000
					B	0.000	6.912		100.00	0.000	0.000
					C	0.000	6.912		100.00	1.667	0.000
L3 140.0000-135.0000	137.4819	1.082	8.405	7.227	A	0.000	7.227	7.227	100.00	0.000	0.000
					B	0.000	7.227		100.00	1.983	0.000
					C	0.000	7.227		100.00	1.667	0.000
L4 135.0000-130.0000	132.4826	1.071	8.317	7.543	A	0.000	7.543	7.543	100.00	0.000	0.000
					B	0.000	7.543		100.00	3.305	0.000
					C	0.000	7.543		100.00	1.667	0.000
L5 130.0000-128.5000	129.2485	1.063	8.258	2.324	A	0.000	2.324	2.324	100.00	0.050	0.000
					B	0.000	2.324		100.00	1.017	0.000
					C	0.000	2.324		100.00	0.525	0.000
L6 128.5000-128.2500	128.3750	1.061	8.242	0.387	A	0.000	0.387	0.387	100.00	0.008	0.000
					B	0.000	0.387		100.00	0.169	0.000
					C	0.000	0.387		100.00	0.087	0.000
L7 128.2500-123.2500	125.7336	1.055	8.193	7.907	A	0.000	7.907	7.907	100.00	0.167	0.000
					B	0.000	7.907		100.00	3.388	0.000
					C	0.000	7.907		100.00	1.750	0.000
L8 123.2500-118.2500	120.7342	1.043	8.099	8.226	A	0.000	8.226	8.226	100.00	0.167	0.000
					B	0.000	8.226		100.00	3.388	0.000
					C	0.000	8.226		100.00	3.465	0.000
L9 118.2500-113.2500	115.7348	1.03	8.002	8.543	A	0.000	8.543	8.543	100.00	0.167	0.000
					B	0.000	8.543		100.00	3.388	0.000
					C	0.000	8.543		100.00	6.650	0.000
L10 113.2500-109.0000	111.1144	1.018	7.909	7.512	A	0.000	7.512	7.512	100.00	0.125	0.000
					B	0.000	7.512		100.00	2.872	0.000
					C	0.000	7.512		100.00	5.644	0.000
L11 109.0000-108.7500	108.8750	1.013	7.863	0.448	A	0.000	0.448	0.448	100.00	0.008	0.000
					B	0.000	0.448		100.00	0.169	0.000
					C	0.000	0.448		100.00	0.333	0.000
L12 108.7500-104.1700	106.4477	1.006	7.813	8.355	A	0.000	8.355	8.355	100.00	0.924	0.000
					B	0.000	8.355		100.00	4.647	0.000
					C	0.000	8.355		100.00	6.863	0.000
L13 104.1700-103.9200	104.0450	0.999	7.762	0.462	A	0.000	0.462	0.462	100.00	0.051	0.000
					B	0.000	0.462		100.00	0.255	0.000
					C	0.000	0.462		100.00	0.375	0.000
L14 103.9200-103.1700	103.5447	0.998	7.751	1.391	A	0.000	1.391	1.391	100.00	0.154	0.000
					B	0.000	1.391		100.00	0.766	0.000
					C	0.000	1.391		100.00	1.126	0.000
L15 103.1700-102.9200	103.0450	0.997	7.740	0.464	A	0.000	0.464	0.464	100.00	0.051	0.000
					B	0.000	0.464		100.00	0.255	0.000
					C	0.000	0.464		100.00	0.375	0.000

Section Elevation ft	z ft	K_Z	q_z psf	A_G ft^2	Face	A_F ft^2	A_R ft^2	A_{leg} ft^2	Leg %	C_AA_A In Face ft^2	C_AA_A Out Face ft^2
L16	102.6699	0.996	7.732	0.931	A	0.000	0.931	0.931	100.00	0.102	0.000
102.9200-					B	0.000	0.931		100.00	0.510	0.000
102.4200					C	0.000	0.931		100.00	0.751	0.000
L17	102.2950	0.995	7.724	0.468	A	0.000	0.468	0.468	100.00	0.051	0.000
102.4200-					B	0.000	0.468		100.00	0.255	0.000
102.1700					C	0.000	0.468		100.00	0.375	0.000
L18	101.5441	0.993	7.708	2.352	A	0.000	2.352	2.352	100.00	0.256	0.000
102.1700-					B	0.000	2.352		100.00	1.276	0.000
100.9200					C	0.000	2.352		100.00	1.877	0.000
L19	100.7950	0.99	7.692	0.472	A	0.000	0.472	0.472	100.00	0.051	0.000
100.9200-					B	0.000	0.472		100.00	0.255	0.000
100.6700					C	0.000	0.472		100.00	0.375	0.000
L20	100.1243	0.989	7.677	2.069	A	0.000	2.069	2.069	100.00	0.223	0.000
100.6700-					B	0.000	2.069		100.00	1.128	0.000
99.5800					C	0.000	2.069		100.00	1.637	0.000
L21 99.5800-	99.4550	0.987	7.662	0.474	A	0.000	0.474	0.474	100.00	0.051	0.000
99.3300					B	0.000	0.474		100.00	0.259	0.000
					C	0.000	0.474		100.00	0.375	0.000
L22 99.3300-	97.2808	0.98	7.614	7.855	A	0.000	7.855	7.855	100.00	0.790	0.000
95.2500					B	0.000	7.855		100.00	5.672	0.000
					C	0.000	7.855		100.00	6.126	0.000
L23 95.2500-	95.1250	0.974	7.566	0.491	A	0.000	0.491	0.491	100.00	0.047	0.000
95.0000					B	0.000	0.491		100.00	0.354	0.000
					C	0.000	0.491		100.00	0.375	0.000
L24 95.0000-	92.4866	0.966	7.505	9.986	A	0.000	9.986	9.986	100.00	0.883	0.000
90.0000					B	0.000	9.986		100.00	7.026	0.000
					C	0.000	9.986		100.00	7.450	0.000
L25 90.0000-	87.4870	0.951	7.387	10.318	A	0.000	10.318	10.318	100.00	0.858	0.000
85.0000					B	0.000	10.318		100.00	7.001	0.000
					C	0.000	10.318		100.00	7.425	0.000
L26 85.0000-	82.7398	0.936	7.270	9.569	A	0.000	9.569	9.569	100.00	0.375	0.000
80.5000					B	0.000	9.569		100.00	5.482	0.000
					C	0.000	9.569		100.00	6.310	0.000
L27 80.5000-	80.3750	0.928	7.210	0.537	A	0.000	0.537	0.537	100.00	0.008	0.000
80.2500					B	0.000	0.537		100.00	0.277	0.000
					C	0.000	0.537		100.00	0.341	0.000
L28 80.2500-	77.7378	0.92	7.142	10.910	A	0.000	10.910	10.910	100.00	0.167	0.000
75.2500					B	0.000	10.910		100.00	5.535	0.000
					C	0.000	10.910		100.00	6.817	0.000
L29 75.2500-	74.4137	0.908	7.053	3.718	A	0.000	3.718	3.718	100.00	0.056	0.000
73.5800					B	0.000	3.718		100.00	1.849	0.000
					C	0.000	3.718		100.00	2.277	0.000
L30 73.5800-	73.4550	0.905	7.027	0.560	A	0.000	0.560	0.560	100.00	0.008	0.000
73.3300					B	0.000	0.560		100.00	0.277	0.000
					C	0.000	0.560		100.00	0.341	0.000
L31 73.3300-	71.1562	0.897	6.963	9.826	A	0.000	9.826	9.826	100.00	0.144	0.000
69.0000					B	0.000	9.826		100.00	4.793	0.000
					C	0.000	9.826		100.00	5.903	0.000
L32 69.0000-	67.9980	0.885	6.874	4.539	A	0.000	4.539	4.539	100.00	0.133	0.000
67.0000					B	0.000	4.539		100.00	2.247	0.000
					C	0.000	4.539		100.00	2.760	0.000
L33 67.0000-	66.8750	0.881	6.841	0.571	A	0.000	0.571	0.571	100.00	0.017	0.000
66.7500					B	0.000	0.571		100.00	0.281	0.000
					C	0.000	0.571		100.00	0.345	0.000
L34 66.7500-	66.6250	0.88	6.834	0.571	A	0.000	0.571	0.571	100.00	0.017	0.000
66.5000					B	0.000	0.571		100.00	0.281	0.000
					C	0.000	0.571		100.00	0.345	0.000
L35 66.5000-	63.9877	0.87	6.755	11.619	A	0.000	11.619	11.619	100.00	0.250	0.000
61.5000					B	0.000	11.619		100.00	5.535	0.000
					C	0.000	11.619		100.00	6.733	0.000
L36 61.5000-	58.9880	0.85	6.600	11.976	A	0.000	11.976	11.976	100.00	0.250	0.000
56.5000					B	0.000	11.976		100.00	5.535	0.000
					C	0.000	11.976		100.00	6.733	0.000
L37 56.5000-	53.9884	0.829	6.435	12.329	A	0.000	12.329	12.329	100.00	0.250	0.000
51.5000					B	0.000	12.329		100.00	5.535	0.000
					C	0.000	12.329		100.00	6.733	0.000
L38 51.5000-	49.8702	0.81	6.291	8.203	A	0.000	8.203	8.203	100.00	0.850	0.000
48.2500					B	0.000	8.203		100.00	4.285	0.000

Section Elevation ft	z ft	K_Z	q_z psf	A_G ft^2	Face	A_F ft^2	A_R ft^2	A_{leg} ft^2	Leg %	C_AA_A In Face ft^2	C_AA_A Out Face ft^2
					C	0.000	8.203		100.00	5.752	0.000
L39 48.2500-48.0000	48.1250	0.802	6.227	0.634	A	0.000	0.634	0.634	100.00	0.075	0.000
					B	0.000	0.634		100.00	0.339	0.000
					C	0.000	0.634		100.00	0.462	0.000
L40 48.0000-44.2500	46.1187	0.792	6.152	9.618	A	0.000	9.618	9.618	100.00	1.125	0.000
					B	0.000	9.618		100.00	5.089	0.000
					C	0.000	9.618		100.00	6.925	0.000
L41 44.2500-44.0000	44.1250	0.782	6.075	0.647	A	0.000	0.647	0.647	100.00	0.075	0.000
					B	0.000	0.647		100.00	0.339	0.000
					C	0.000	0.647		100.00	0.462	0.000
L42 44.0000-43.0800	43.5396	0.779	6.052	2.390	A	0.000	2.390	2.390	100.00	0.276	0.000
					B	0.000	2.390		100.00	1.248	0.000
					C	0.000	2.390		100.00	1.699	0.000
L43 43.0800-42.8300	42.9550	0.776	6.028	0.652	A	0.000	0.652	0.652	100.00	0.075	0.000
					B	0.000	0.652		100.00	0.339	0.000
					C	0.000	0.652		100.00	0.462	0.000
L44 42.8300-37.8300	40.3192	0.762	5.920	13.225	A	0.000	13.225	13.225	100.00	1.500	0.000
					B	0.000	13.225		100.00	6.785	0.000
					C	0.000	13.225		100.00	9.233	0.000
L45 37.8300-30.0000	33.8893	0.725	5.634	21.418	A	0.000	21.418	21.418	100.00	2.349	0.000
					B	0.000	21.418		100.00	10.625	0.000
					C	0.000	21.418		100.00	14.459	0.000
L46 30.0000-29.0000	29.4996	0.7	5.436	2.743	A	0.000	2.743	2.743	100.00	0.300	0.000
					B	0.000	2.743		100.00	1.357	0.000
					C	0.000	2.743		100.00	1.847	0.000
L47 29.0000-24.0000	26.4893	0.7	5.436	13.942	A	0.000	13.942	13.942	100.00	1.500	0.000
					B	0.000	13.942		100.00	6.785	0.000
					C	0.000	13.942		100.00	9.233	0.000
L48 24.0000-23.7500	23.8750	0.7	5.436	0.707	A	0.000	0.707	0.707	100.00	0.075	0.000
					B	0.000	0.707		100.00	0.339	0.000
					C	0.000	0.707		100.00	0.462	0.000
L49 23.7500-23.5000	23.6250	0.7	5.436	0.708	A	0.000	0.708	0.708	100.00	0.075	0.000
					B	0.000	0.708		100.00	0.339	0.000
					C	0.000	0.708		100.00	0.462	0.000
L50 23.5000-18.5000	20.9896	0.7	5.436	14.350	A	0.000	14.350	14.350	100.00	1.500	0.000
					B	0.000	14.350		100.00	6.785	0.000
					C	0.000	14.350		100.00	9.233	0.000
L51 18.5000-13.5000	15.9898	0.7	5.436	14.721	A	0.000	14.721	14.721	100.00	1.500	0.000
					B	0.000	14.721		100.00	6.785	0.000
					C	0.000	14.721		100.00	9.233	0.000
L52 13.5000-11.0000	12.2475	0.7	5.436	7.499	A	0.000	7.499	7.499	100.00	0.750	0.000
					B	0.000	7.499		100.00	3.393	0.000
					C	0.000	7.499		100.00	4.617	0.000
L53 11.0000-10.7500	10.8750	0.7	5.436	0.757	A	0.000	0.757	0.757	100.00	0.075	0.000
					B	0.000	0.757		100.00	0.339	0.000
					C	0.000	0.757		100.00	0.462	0.000
L54 10.7500-6.0000	8.3662	0.7	5.436	14.555	A	0.000	14.555	14.555	100.00	1.425	0.000
					B	0.000	14.555		100.00	6.404	0.000
					C	0.000	14.555		100.00	8.730	0.000
L55 6.0000-5.7500	5.8750	0.7	5.436	0.773	A	0.000	0.773	0.773	100.00	0.075	0.000
					B	0.000	0.773		100.00	0.335	0.000
					C	0.000	0.773		100.00	0.457	0.000
L56 5.7500-3.2500	4.4976	0.7	5.436	7.783	A	0.000	7.783	7.783	100.00	0.746	0.000
					B	0.000	7.783		100.00	3.347	0.000
					C	0.000	7.783		100.00	4.575	0.000
L57 3.2500-3.0000	3.1250	0.7	5.436	0.786	A	0.000	0.786	0.786	100.00	0.071	0.000
					B	0.000	0.786		100.00	0.331	0.000
					C	0.000	0.786		100.00	0.457	0.000
L58 3.0000-0.0000	1.4966	0.7	5.436	9.504	A	0.000	9.504	9.504	100.00	0.850	0.000
					B	0.000	9.504		100.00	3.971	0.000
					C	0.000	9.504		100.00	5.490	0.000

Load Combinations

Comb. No.	Description
1	Dead Only

Comb. No.	Description
2	1.2 Dead+1.0 Wind 0 deg - No Ice
3	0.9 Dead+1.0 Wind 0 deg - No Ice
4	1.2 Dead+1.0 Wind 30 deg - No Ice
5	0.9 Dead+1.0 Wind 30 deg - No Ice
6	1.2 Dead+1.0 Wind 60 deg - No Ice
7	0.9 Dead+1.0 Wind 60 deg - No Ice
8	1.2 Dead+1.0 Wind 90 deg - No Ice
9	0.9 Dead+1.0 Wind 90 deg - No Ice
10	1.2 Dead+1.0 Wind 120 deg - No Ice
11	0.9 Dead+1.0 Wind 120 deg - No Ice
12	1.2 Dead+1.0 Wind 150 deg - No Ice
13	0.9 Dead+1.0 Wind 150 deg - No Ice
14	1.2 Dead+1.0 Wind 180 deg - No Ice
15	0.9 Dead+1.0 Wind 180 deg - No Ice
16	1.2 Dead+1.0 Wind 210 deg - No Ice
17	0.9 Dead+1.0 Wind 210 deg - No Ice
18	1.2 Dead+1.0 Wind 240 deg - No Ice
19	0.9 Dead+1.0 Wind 240 deg - No Ice
20	1.2 Dead+1.0 Wind 270 deg - No Ice
21	0.9 Dead+1.0 Wind 270 deg - No Ice
22	1.2 Dead+1.0 Wind 300 deg - No Ice
23	0.9 Dead+1.0 Wind 300 deg - No Ice
24	1.2 Dead+1.0 Wind 330 deg - No Ice
25	0.9 Dead+1.0 Wind 330 deg - No Ice
26	1.2 Dead+1.0 Ice+1.0 Temp
27	1.2 Dead+1.0 Wind 0 deg+1.0 Ice+1.0 Temp
28	1.2 Dead+1.0 Wind 30 deg+1.0 Ice+1.0 Temp
29	1.2 Dead+1.0 Wind 60 deg+1.0 Ice+1.0 Temp
30	1.2 Dead+1.0 Wind 90 deg+1.0 Ice+1.0 Temp
31	1.2 Dead+1.0 Wind 120 deg+1.0 Ice+1.0 Temp
32	1.2 Dead+1.0 Wind 150 deg+1.0 Ice+1.0 Temp
33	1.2 Dead+1.0 Wind 180 deg+1.0 Ice+1.0 Temp
34	1.2 Dead+1.0 Wind 210 deg+1.0 Ice+1.0 Temp
35	1.2 Dead+1.0 Wind 240 deg+1.0 Ice+1.0 Temp
36	1.2 Dead+1.0 Wind 270 deg+1.0 Ice+1.0 Temp
37	1.2 Dead+1.0 Wind 300 deg+1.0 Ice+1.0 Temp
38	1.2 Dead+1.0 Wind 330 deg+1.0 Ice+1.0 Temp
39	Dead+Wind 0 deg - Service
40	Dead+Wind 30 deg - Service
41	Dead+Wind 60 deg - Service
42	Dead+Wind 90 deg - Service
43	Dead+Wind 120 deg - Service
44	Dead+Wind 150 deg - Service
45	Dead+Wind 180 deg - Service
46	Dead+Wind 210 deg - Service
47	Dead+Wind 240 deg - Service
48	Dead+Wind 270 deg - Service
49	Dead+Wind 300 deg - Service
50	Dead+Wind 330 deg - Service

Maximum Member Forces

Section No.	Elevation ft	Component Type	Condition	Gov. Load Comb.	Axial K	Major Axis Moment kip-ft	Minor Axis Moment kip-ft
L1	150 - 145	Pole	Max Tension	26	0.00	0.00	-0.00
			Max. Compression	26	-11.68	-0.14	0.96
			Max. Mx	8	-4.09	-44.75	0.25
			Max. My	2	-4.11	-0.04	44.92
			Max. Vy	8	6.73	-44.75	0.25
			Max. Vx	2	-6.70	-0.04	44.92
			Max. Torque	20			-0.53
L2	145 - 140	Pole	Max Tension	1	0.00	0.00	0.00
			Max. Compression	26	-12.38	-0.15	0.49
			Max. Mx	8	-4.42	-80.22	0.15
			Max. My	2	-4.46	-0.05	79.76
			Max. Vy	8	7.39	-80.22	0.15
			Max. Vx	2	-7.26	-0.05	79.76
			Max. Torque	20			-0.50

Section No.	Elevation ft	Component Type	Condition	Gov. Load Comb.	Axial K	Major Axis Moment kip-ft	Minor Axis Moment kip-ft
L3	140 - 135	Pole	Max Tension	1	0.00	0.00	0.00
			Max. Compression	26	-24.39	-0.58	0.28
			Max. Mx	8	-10.55	-133.44	0.17
			Max. My	2	-10.59	-0.25	132.10
			Max. Vy	8	11.70	-133.44	0.17
			Max. Vx	2	-11.56	-0.25	132.10
			Max. Torque	16			0.62
L4	135 - 130	Pole	Max Tension	1	0.00	0.00	0.00
			Max. Compression	26	-25.05	-0.68	0.29
			Max. Mx	8	-10.98	-192.58	0.32
			Max. My	2	-11.02	-0.36	190.51
			Max. Vy	8	11.96	-192.58	0.32
			Max. Vx	2	-11.82	-0.36	190.51
			Max. Torque	16			0.62
L5	130 - 128.5	Pole	Max Tension	1	0.00	0.00	0.00
			Max. Compression	26	-25.28	-0.71	0.29
			Max. Mx	8	-11.11	-210.56	0.36
			Max. My	2	-11.15	-0.39	208.28
			Max. Vy	8	12.04	-210.56	0.36
			Max. Vx	2	-11.89	-0.39	208.28
			Max. Torque	16			0.61
L6	128.5 - 128.25	Pole	Max Tension	1	0.00	0.00	0.00
			Max. Compression	26	-25.34	-0.72	0.29
			Max. Mx	8	-11.16	-213.57	0.37
			Max. My	2	-11.21	-0.40	211.25
			Max. Vy	8	12.04	-213.57	0.37
			Max. Vx	2	-11.90	-0.40	211.25
			Max. Torque	16			0.61
L7	128.25 - 123.25	Pole	Max Tension	1	0.00	0.00	0.00
			Max. Compression	26	-26.51	-0.81	0.31
			Max. Mx	8	-11.95	-274.68	0.52
			Max. My	2	-12.00	-0.51	271.58
			Max. Vy	8	12.40	-274.68	0.52
			Max. Vx	2	-12.24	-0.51	271.58
			Max. Torque	16			0.61
L8	123.25 - 118.25	Pole	Max Tension	1	0.00	0.00	0.00
			Max. Compression	26	-37.27	-0.91	0.28
			Max. Mx	8	-17.13	-346.99	0.65
			Max. My	2	-17.19	-0.62	342.91
			Max. Vy	8	18.13	-346.99	0.65
			Max. Vx	2	-17.90	-0.62	342.91
			Max. Torque	16			0.69
L9	118.25 - 113.25	Pole	Max Tension	1	0.00	0.00	0.00
			Max. Compression	26	-38.60	-1.01	0.16
			Max. Mx	8	-18.00	-438.98	0.78
			Max. My	2	-18.09	-0.74	433.11
			Max. Vy	8	18.67	-438.98	0.78
			Max. Vx	2	-18.21	-0.74	433.11
			Max. Torque	16			0.80
L10	113.25 - 109	Pole	Max Tension	1	0.00	0.00	0.00
			Max. Compression	26	-41.09	-1.10	0.06
			Max. Mx	8	-19.73	-519.58	0.89
			Max. My	2	-19.83	-0.84	511.30
			Max. Vy	8	19.76	-519.58	0.89
			Max. Vx	2	-19.09	-0.84	511.30
			Max. Torque	16			0.89
L11	109 - 108.75	Pole	Max Tension	1	0.00	0.00	0.00
			Max. Compression	26	-41.16	-1.11	0.05
			Max. Mx	8	-19.79	-524.52	0.89
			Max. My	2	-19.89	-0.84	516.07
			Max. Vy	8	19.77	-524.52	0.89
			Max. Vx	2	-19.10	-0.84	516.07
			Max. Torque	16			0.90
L12	108.75 - 104.17	Pole	Max Tension	1	0.00	0.00	0.00

Section No.	Elevation ft	Component Type	Condition	Gov. Load Comb.	Axial K	Major Axis Moment kip-ft	Minor Axis Moment kip-ft
			Max. Compression	26	-42.66	-1.22	-0.04
			Max. Mx	8	-20.74	-616.43	1.01
			Max. My	2	-20.85	-0.95	604.61
			Max. Vy	8	20.37	-616.43	1.01
			Max. Vx	2	-19.59	-0.95	604.61
			Max. Torque	16			0.98
L13	104.17 - 103.92	Pole	Max Tension	1	0.00	0.00	0.00
			Max. Compression	26	-42.76	-1.23	-0.05
			Max. Mx	8	-20.83	-621.53	1.01
			Max. My	2	-20.93	-0.95	609.50
			Max. Vy	8	20.39	-621.53	1.01
			Max. Vx	2	-19.61	-0.95	609.50
			Max. Torque	16			0.98
L14	103.92 - 103.17	Pole	Max Tension	1	0.00	0.00	0.00
			Max. Compression	26	-43.07	-1.24	-0.06
			Max. Mx	8	-21.04	-636.86	1.03
			Max. My	2	-21.15	-0.97	624.24
			Max. Vy	8	20.50	-636.86	1.03
			Max. Vx	2	-19.70	-0.97	624.24
			Max. Torque	16			1.00
L15	103.17 - 102.92	Pole	Max Tension	1	0.00	0.00	0.00
			Max. Compression	26	-43.19	-1.25	-0.07
			Max. Mx	8	-21.13	-641.99	1.04
			Max. My	2	-21.24	-0.98	629.16
			Max. Vy	8	20.53	-641.99	1.04
			Max. Vx	2	-19.73	-0.98	629.16
			Max. Torque	16			1.00
L16	102.92 - 102.42	Pole	Max Tension	1	0.00	0.00	0.00
			Max. Compression	26	-43.42	-1.26	-0.08
			Max. Mx	8	-21.30	-652.28	1.05
			Max. My	2	-21.40	-0.99	639.04
			Max. Vy	8	20.61	-652.28	1.05
			Max. Vx	2	-19.79	-0.99	639.04
			Max. Torque	16			1.01
L17	102.42 - 102.17	Pole	Max Tension	1	0.00	0.00	0.00
			Max. Compression	26	-43.52	-1.27	-0.09
			Max. Mx	8	-21.38	-657.43	1.06
			Max. My	2	-21.48	-0.99	643.99
			Max. Vy	8	20.64	-657.43	1.06
			Max. Vx	2	-19.82	-0.99	643.99
			Max. Torque	16			1.02
L18	102.17 - 100.92	Pole	Max Tension	1	0.00	0.00	0.00
			Max. Compression	26	-44.07	-1.30	-0.11
			Max. Mx	8	-21.76	-683.34	1.09
			Max. My	2	-21.87	-1.02	668.84
			Max. Vy	8	20.82	-683.34	1.09
			Max. Vx	2	-19.97	-1.02	668.84
			Max. Torque	16			1.04
L19	100.92 - 100.67	Pole	Max Tension	1	0.00	0.00	0.00
			Max. Compression	26	-44.18	-1.31	-0.12
			Max. Mx	8	-21.85	-688.55	1.10
			Max. My	2	-21.96	-1.03	673.83
			Max. Vy	8	20.85	-688.55	1.10
			Max. Vx	2	-19.99	-1.03	673.83
			Max. Torque	16			1.04
L20	100.67 - 99.58	Pole	Max Tension	1	0.00	0.00	0.00
			Max. Compression	26	-44.65	-1.33	-0.14
			Max. Mx	8	-22.18	-711.36	1.12
			Max. My	2	-22.29	-1.05	695.68
			Max. Vy	8	21.01	-711.36	1.12
			Max. Vx	2	-20.13	-1.05	695.68

Section No.	Elevation ft	Component Type	Condition	Gov. Load Comb.	Axial K	Major Axis Moment kip-ft	Minor Axis Moment kip-ft
			Max. Torque	16			1.06
L21	99.58 - 99.33	Pole	Max Tension	1	0.00	0.00	0.00
			Max. Compression	26	-44.77	-1.35	-0.14
			Max. Mx	8	-22.28	-716.62	1.13
			Max. My	2	-22.39	-1.06	700.71
			Max. Vy	8	21.04	-716.62	1.13
			Max. Vx	2	-20.15	-1.06	700.71
			Max. Torque	16			1.07
L22	99.33 - 95.25	Pole	Max Tension	1	0.00	0.00	0.00
			Max. Compression	26	-52.32	-1.83	1.45
			Max. Mx	8	-26.07	-814.34	2.28
			Max. My	2	-26.18	-1.54	795.51
			Max. Vy	8	23.94	-814.34	2.28
			Max. Vx	2	-23.05	-1.54	795.51
			Max. Torque	16			1.07
L23	95.25 - 95	Pole	Max Tension	1	0.00	0.00	0.00
			Max. Compression	26	-52.43	-1.84	1.45
			Max. Mx	8	-26.15	-820.33	2.28
			Max. My	2	-26.26	-1.55	801.27
			Max. Vy	8	23.97	-820.33	2.28
			Max. Vx	2	-23.08	-1.55	801.27
			Max. Torque	16			0.88
L24	95 - 90	Pole	Max Tension	1	0.00	0.00	0.00
			Max. Compression	26	-54.47	-2.05	1.36
			Max. Mx	8	-27.62	-941.83	2.31
			Max. My	2	-27.72	-1.57	918.22
			Max. Vy	8	24.63	-941.83	2.31
			Max. Vx	2	-23.73	-1.57	918.22
			Max. Torque	16			1.03
L25	90 - 85	Pole	Max Tension	1	0.00	0.00	0.00
			Max. Compression	26	-56.50	-2.26	1.28
			Max. Mx	8	-29.12	-1066.58	2.34
			Max. My	2	-29.22	-1.60	1038.35
			Max. Vy	8	25.28	-1066.58	2.34
			Max. Vx	2	-24.36	-1.60	1038.35
			Max. Torque	16			1.17
L26	85 - 80.5	Pole	Max Tension	1	0.00	0.00	0.00
			Max. Compression	26	-58.36	-2.45	1.20
			Max. Mx	8	-30.49	-1181.55	2.37
			Max. My	2	-30.59	-1.63	1149.10
			Max. Vy	8	25.84	-1181.55	2.37
			Max. Vx	2	-24.91	-1.63	1149.10
			Max. Torque	16			1.34
L27	80.5 - 80.25	Pole	Max Tension	1	0.00	0.00	0.00
			Max. Compression	26	-58.49	-2.47	1.19
			Max. Mx	8	-30.60	-1188.02	2.37
			Max. My	2	-30.70	-1.63	1155.32
			Max. Vy	8	25.86	-1188.02	2.37
			Max. Vx	2	-24.93	-1.63	1155.32
			Max. Torque	16			1.35
L28	80.25 - 75.25	Pole	Max Tension	1	0.00	0.00	0.00
			Max. Compression	26	-61.02	-2.66	1.08
			Max. Mx	8	-32.52	-1318.99	2.40
			Max. My	2	-32.61	-1.66	1281.53
			Max. Vy	8	26.53	-1318.99	2.40
			Max. Vx	2	-25.59	-1.66	1281.53
			Max. Torque	16			1.57
L29	75.25 - 73.58	Pole	Max Tension	1	0.00	0.00	0.00
			Max. Compression	26	-61.88	-2.72	1.05
			Max. Mx	8	-33.16	-1363.48	2.41
			Max. My	2	-33.25	-1.67	1324.41
			Max. Vy	8	26.76	-1363.48	2.41
			Max. Vx	2	-25.81	-1.67	1324.41
			Max. Torque	16			1.65

Section No.	Elevation ft	Component Type	Condition	Gov. Load Comb.	Axial K	Major Axis Moment kip-ft	Minor Axis Moment kip-ft
L30	73.58 - 73.33	Pole	Max Tension	1	0.00	0.00	0.00
			Max. Compression	26	-62.00	-2.74	1.04
			Max. Mx	8	-33.27	-1370.17	2.41
			Max. My	2	-33.36	-1.67	1330.86
			Max. Vy	8	26.78	-1370.17	2.41
			Max. Vx	2	-25.83	-1.67	1330.86
			Max. Torque	16			1.66
L31	73.33 - 69	Pole	Max Tension	1	0.00	0.00	0.00
			Max. Compression	26	-62.69	-2.79	1.01
			Max. Mx	8	-33.78	-1405.90	2.41
			Max. My	2	-33.87	-1.68	1365.31
			Max. Vy	8	26.96	-1405.90	2.41
			Max. Vx	2	-26.01	-1.68	1365.31
			Max. Torque	16			1.72
L32	69 - 67	Pole	Max Tension	1	0.00	0.00	0.00
			Max. Compression	26	-66.55	-2.98	0.90
			Max. Mx	8	-36.83	-1542.59	2.44
			Max. My	2	-36.92	-1.71	1497.11
			Max. Vy	8	27.69	-1542.59	2.44
			Max. Vx	2	-26.72	-1.71	1497.11
			Max. Torque	16			1.94
L33	67 - 66.75	Pole	Max Tension	1	0.00	0.00	0.00
			Max. Compression	26	-66.68	-2.99	0.89
			Max. Mx	8	-36.95	-1549.51	2.44
			Max. My	2	-37.03	-1.71	1503.79
			Max. Vy	8	27.71	-1549.51	2.44
			Max. Vx	2	-26.74	-1.71	1503.79
			Max. Torque	16			1.95
L34	66.75 - 66.5	Pole	Max Tension	1	0.00	0.00	0.00
			Max. Compression	26	-66.83	-3.00	0.89
			Max. Mx	8	-37.06	-1556.44	2.44
			Max. My	2	-37.14	-1.71	1510.48
			Max. Vy	8	27.74	-1556.44	2.44
			Max. Vx	2	-26.77	-1.71	1510.48
			Max. Torque	16			1.96
L35	66.5 - 61.5	Pole	Max Tension	1	0.00	0.00	0.00
			Max. Compression	26	-69.60	-3.17	0.79
			Max. Mx	8	-39.22	-1696.71	2.47
			Max. My	2	-39.30	-1.74	1645.78
			Max. Vy	8	28.37	-1696.71	2.47
			Max. Vx	2	-27.39	-1.74	1645.78
			Max. Torque	16			2.14
L36	61.5 - 56.5	Pole	Max Tension	1	0.00	0.00	0.00
			Max. Compression	26	-72.38	-3.35	0.69
			Max. Mx	8	-41.43	-1840.00	2.49
			Max. My	2	-41.50	-1.77	1784.06
			Max. Vy	8	28.96	-1840.00	2.49
			Max. Vx	2	-27.97	-1.77	1784.06
			Max. Torque	16			2.31
L37	56.5 - 51.5	Pole	Max Tension	1	0.00	0.00	0.00
			Max. Compression	26	-75.18	-3.54	0.59
			Max. Mx	8	-43.65	-1986.21	2.51
			Max. My	2	-43.72	-1.80	1925.20
			Max. Vy	8	29.54	-1986.21	2.51
			Max. Vx	2	-28.53	-1.80	1925.20
			Max. Torque	16			2.49
L38	51.5 - 48.25	Pole	Max Tension	1	0.00	0.00	0.00
			Max. Compression	26	-77.09	-3.66	0.50
			Max. Mx	8	-45.12	-2082.76	2.52
			Max. My	2	-45.18	-1.83	2018.43
			Max. Vy	8	29.90	-2082.76	2.52
			Max. Vx	2	-28.89	-1.83	2018.43
			Max. Torque	16			2.62
L39	48.25 - 48	Pole	Max Tension	1	0.00	0.00	0.00
			Max. Compression	26	-77.26	-3.67	0.50
			Max. Mx	8	-45.26	-2090.24	2.52
			Max. My	2	-45.32	-1.83	2025.65
			Max. Vy	8	29.91	-2090.24	2.52

Section No.	Elevation ft	Component Type	Condition	Gov. Load Comb.	Axial K	Major Axis Moment kip-ft	Minor Axis Moment kip-ft
			Max. Vx	2	-28.90	-1.83	2025.65
			Max. Torque	16			2.63
L40	48 - 44.25	Pole	Max Tension	1	0.00	0.00	0.00
			Max. Compression	26	-79.77	-3.81	0.39
			Max. Mx	8	-47.23	-2203.25	2.54
			Max. My	2	-47.29	-1.85	2134.81
			Max. Vy	8	30.37	-2203.25	2.54
			Max. Vx	2	-29.35	-1.85	2134.81
			Max. Torque	16			2.77
L41	44.25 - 44	Pole	Max Tension	1	0.00	0.00	0.00
			Max. Compression	26	-79.95	-3.82	0.38
			Max. Mx	8	-47.38	-2210.84	2.54
			Max. My	2	-47.44	-1.86	2142.14
			Max. Vy	8	30.38	-2210.84	2.54
			Max. Vx	2	-29.37	-1.86	2142.14
			Max. Torque	16			2.78
L42	44 - 43.08	Pole	Max Tension	1	0.00	0.00	0.00
			Max. Compression	26	-80.60	-3.85	0.35
			Max. Mx	8	-47.89	-2238.85	2.54
			Max. My	2	-47.95	-1.86	2169.20
			Max. Vy	8	30.50	-2238.85	2.54
			Max. Vx	2	-29.48	-1.86	2169.20
			Max. Torque	16			2.82
L43	43.08 - 42.83	Pole	Max Tension	1	0.00	0.00	0.00
			Max. Compression	26	-80.77	-3.87	0.35
			Max. Mx	8	-48.04	-2246.48	2.54
			Max. My	2	-48.09	-1.86	2176.57
			Max. Vy	8	30.52	-2246.48	2.54
			Max. Vx	2	-29.50	-1.86	2176.57
			Max. Torque	16			2.83
L44	42.83 - 37.83	Pole	Max Tension	1	0.00	0.00	0.00
			Max. Compression	26	-84.28	-4.05	0.20
			Max. Mx	8	-50.84	-2400.52	2.56
			Max. My	2	-50.88	-1.90	2325.40
			Max. Vy	8	31.10	-2400.52	2.56
			Max. Vx	2	-30.07	-1.90	2325.40
			Max. Torque	16			3.02
L45	37.83 - 30	Pole	Max Tension	1	0.00	0.00	0.00
			Max. Compression	26	-86.98	-4.20	0.08
			Max. Mx	8	-53.00	-2520.37	2.57
			Max. My	2	-53.04	-1.93	2441.24
			Max. Vy	8	31.51	-2520.37	2.57
			Max. Vx	2	-30.47	-1.93	2441.24
			Max. Torque	16			3.17
L46	30 - 29	Pole	Max Tension	1	0.00	0.00	0.00
			Max. Compression	26	-93.00	-4.40	-0.07
			Max. Mx	8	-58.07	-2679.52	2.58
			Max. My	2	-58.11	-1.97	2595.10
			Max. Vy	8	32.14	-2679.52	2.58
			Max. Vx	2	-31.10	-1.97	2595.10
			Max. Torque	16			3.36
L47	29 - 24	Pole	Max Tension	1	0.00	0.00	0.00
			Max. Compression	26	-96.71	-4.59	-0.21
			Max. Mx	8	-61.12	-2841.40	2.60
			Max. My	2	-61.15	-2.00	2751.66
			Max. Vy	8	32.63	-2841.40	2.60
			Max. Vx	2	-31.58	-2.00	2751.66
			Max. Torque	16			3.55
L48	24 - 23.75	Pole	Max Tension	1	0.00	0.00	0.00
			Max. Compression	26	-96.90	-4.61	-0.22
			Max. Mx	8	-61.28	-2849.56	2.60
			Max. My	2	-61.31	-2.01	2759.55
			Max. Vy	8	32.64	-2849.56	2.60
			Max. Vx	2	-31.59	-2.01	2759.55
			Max. Torque	16			3.56
L49	23.75 - 23.5	Pole	Max Tension	1	0.00	0.00	0.00
			Max. Compression	26	-97.09	-4.62	-0.23

Section No.	Elevation ft	Component Type	Condition	Gov. Load Comb.	Axial K	Major Axis Moment kip-ft	Minor Axis Moment kip-ft
			Max. Mx	8	-61.43	-2857.73	2.60
			Max. My	2	-61.47	-2.01	2767.45
			Max. Vy	8	32.66	-2857.73	2.60
			Max. Vx	2	-31.61	-2.01	2767.45
			Max. Torque	16			3.57
L50	23.5 - 18.5	Pole	Max Tension	1	0.00	0.00	0.00
			Max. Compression	26	-100.82	-4.81	-0.38
			Max. Mx	8	-64.50	-3022.26	2.61
			Max. My	2	-64.53	-2.05	2926.62
			Max. Vy	8	33.15	-3022.26	2.61
			Max. Vx	2	-32.10	-2.05	2926.62
			Max. Torque	16			3.76
L51	18.5 - 13.5	Pole	Max Tension	1	0.00	0.00	0.00
			Max. Compression	26	-104.55	-5.01	-0.53
			Max. Mx	8	-67.61	-3189.16	2.62
			Max. My	2	-67.63	-2.09	3088.12
			Max. Vy	8	33.62	-3189.16	2.62
			Max. Vx	2	-32.56	-2.09	3088.12
			Max. Torque	16			3.95
L52	13.5 - 11	Pole	Max Tension	1	0.00	0.00	0.00
			Max. Compression	26	-106.43	-5.10	-0.61
			Max. Mx	8	-69.17	-3273.49	2.63
			Max. My	2	-69.19	-2.11	3169.75
			Max. Vy	8	33.86	-3273.49	2.63
			Max. Vx	2	-32.80	-2.11	3169.75
			Max. Torque	16			4.05
L53	11 - 10.75	Pole	Max Tension	1	0.00	0.00	0.00
			Max. Compression	26	-106.61	-5.11	-0.61
			Max. Mx	8	-69.34	-3281.96	2.63
			Max. My	2	-69.36	-2.11	3177.94
			Max. Vy	8	33.86	-3281.96	2.63
			Max. Vx	2	-32.80	-2.11	3177.94
			Max. Torque	16			4.06
L54	10.75 - 6	Pole	Max Tension	1	0.00	0.00	0.00
			Max. Compression	26	-110.05	-5.29	-0.76
			Max. Mx	8	-72.26	-3443.69	2.64
			Max. My	2	-72.27	-2.15	3334.60
			Max. Vy	8	34.25	-3443.69	2.64
			Max. Vx	2	-33.22	-2.15	3334.60
			Max. Torque	16			4.26
L55	6 - 5.75	Pole	Max Tension	1	0.00	0.00	0.00
			Max. Compression	26	-110.23	-5.30	-0.76
			Max. Mx	8	-72.42	-3452.25	2.64
			Max. My	2	-72.43	-2.15	3342.90
			Max. Vy	8	34.24	-3452.25	2.64
			Max. Vx	2	-33.21	-2.15	3342.90
			Max. Torque	16			4.27
L56	5.75 - 3.25	Pole	Max Tension	1	0.00	0.00	0.00
			Max. Compression	26	-111.98	-5.39	-0.84
			Max. Mx	8	-73.91	-3538.01	2.64
			Max. My	2	-73.92	-2.17	3426.17
			Max. Vy	8	34.38	-3538.01	2.64
			Max. Vx	2	-33.46	-2.17	3426.17
			Max. Torque	16			4.38
L57	3.25 - 3	Pole	Max Tension	1	0.00	0.00	0.00
			Max. Compression	26	-112.12	-5.40	-0.85
			Max. Mx	8	-74.04	-3546.60	2.64
			Max. My	2	-74.05	-2.17	3434.53
			Max. Vy	8	34.37	-3546.60	2.64
			Max. Vx	2	-33.44	-2.17	3434.53
			Max. Torque	16			4.39
L58	3 - 0	Pole	Max Tension	1	0.00	0.00	0.00
			Max. Compression	26	-113.78	-5.50	-0.94
			Max. Mx	8	-75.47	-3649.88	2.65
			Max. My	2	-75.47	-2.20	3534.97
			Max. Vy	8	34.49	-3649.88	2.65
			Max. Vx	2	-33.56	-2.20	3534.97
			Max. Torque	16			4.52

Maximum Reactions

Location	Condition	Gov. Load Comb.	Vertical K	Horizontal, X K	Horizontal, Z K
Pole	Max. Vert	26	113.78	0.00	-0.00
	Max. H_x	21	56.61	34.46	0.02
	Max. H_z	3	56.61	0.01	33.53
	Max. M_x	2	3534.97	0.01	33.53
	Max. M_z	8	3649.88	-34.46	0.01
	Max. Torsion	16	4.52	17.69	-30.63
	Min. Vert	15	56.61	-0.01	-33.51
	Min. H_x	9	56.61	-34.46	0.01
	Min. H_z	14	75.48	-0.01	-33.51
	Min. M_x	14	-3530.95	-0.01	-33.51
	Min. M_z	20	-3645.72	34.46	0.02
	Min. Torsion	4	-4.50	-17.76	30.64

Tower Mast Reaction Summary

Load Combination	Vertical K	$Shear_x$ K	$Shear_z$ K	Overturning Moment, M_x kip-ft	Overturning Moment, M_z kip-ft	Torque kip-ft
Dead Only	62.90	-0.00	0.00	-0.47	-1.62	-0.00
1.2 Dead+1.0 Wind 0 deg - No Ice	75.48	-0.01	-33.53	-3534.97	-2.20	2.34
0.9 Dead+1.0 Wind 0 deg - No Ice	56.61	-0.01	-33.53	-3482.27	-1.64	2.34
1.2 Dead+1.0 Wind 30 deg - No Ice	75.48	17.76	-30.64	-3180.44	-1849.32	4.50
0.9 Dead+1.0 Wind 30 deg - No Ice	56.61	17.76	-30.64	-3133.22	-1821.41	4.49
1.2 Dead+1.0 Wind 60 deg - No Ice	75.48	28.35	-16.31	-1739.26	-3027.31	2.42
0.9 Dead+1.0 Wind 60 deg - No Ice	56.61	28.35	-16.31	-1712.94	-2981.24	2.42
1.2 Dead+1.0 Wind 90 deg - No Ice	75.48	34.46	-0.01	-2.65	-3649.88	2.80
0.9 Dead+1.0 Wind 90 deg - No Ice	56.61	34.46	-0.01	-2.42	-3595.24	2.79
1.2 Dead+1.0 Wind 120 deg - No Ice	75.48	24.43	14.01	1591.86	-2786.19	-0.25
0.9 Dead+1.0 Wind 120 deg - No Ice	56.61	24.43	14.01	1567.47	-2742.61	-0.26
1.2 Dead+1.0 Wind 150 deg - No Ice	75.48	14.55	25.16	2813.55	-1629.78	-0.10
0.9 Dead+1.0 Wind 150 deg - No Ice	56.61	14.55	25.16	2770.52	-1604.24	-0.10
1.2 Dead+1.0 Wind 180 deg - No Ice	75.48	0.01	33.51	3530.95	-1.95	-2.33
0.9 Dead+1.0 Wind 180 deg - No Ice	56.61	0.01	33.51	3478.60	-1.42	-2.33
1.2 Dead+1.0 Wind 210 deg - No Ice	75.48	-17.69	30.63	3177.49	1835.91	-4.52
0.9 Dead+1.0 Wind 210 deg - No Ice	56.61	-17.69	30.63	3130.65	1809.24	-4.51
1.2 Dead+1.0 Wind 240 deg - No Ice	75.48	-28.34	16.27	1730.59	3022.07	-2.36
0.9 Dead+1.0 Wind 240 deg - No Ice	56.61	-28.34	16.27	1704.75	2977.11	-2.35
1.2 Dead+1.0 Wind 270 deg - No Ice	75.48	-34.46	-0.02	-2.40	3645.72	-2.80
0.9 Dead+1.0 Wind 270 deg - No Ice	56.61	-34.46	-0.02	-2.20	3592.18	-2.80
1.2 Dead+1.0 Wind 300 deg - No Ice	75.48	-24.43	-14.06	-1600.52	2783.12	0.18

Load Combination	Vertical K	$Shear_x$ K	$Shear_z$ K	Overturning Moment, M_x kip-ft	Overturning Moment, M_z kip-ft	Torque kip-ft
0.9 Dead+1.0 Wind 300 deg - No Ice	56.61	-24.43	-14.06	-1575.65	2740.62	0.19
1.2 Dead+1.0 Wind 330 deg - No Ice	75.48	-14.61	-25.17	-2816.49	1634.91	0.13
0.9 Dead+1.0 Wind 330 deg - No Ice	56.61	-14.61	-25.17	-2773.08	1610.31	0.13
1.2 Dead+1.0 Ice+1.0 Temp	113.78	-0.00	0.00	0.94	-5.50	0.00
1.2 Dead+1.0 Wind 0 deg+1.0 Ice+1.0 Temp	113.78	-0.00	-7.49	-855.53	-5.74	0.45
1.2 Dead+1.0 Wind 30 deg+1.0 Ice+1.0 Temp	113.78	3.96	-6.84	-764.45	-450.07	0.83
1.2 Dead+1.0 Wind 60 deg+1.0 Ice+1.0 Temp	113.78	6.38	-3.67	-420.35	-738.57	0.49
1.2 Dead+1.0 Wind 90 deg+1.0 Ice+1.0 Temp	113.78	7.56	-0.00	0.63	-876.47	0.38
1.2 Dead+1.0 Wind 120 deg+1.0 Ice+1.0 Temp	113.78	5.55	3.19	392.30	-689.04	-0.12
1.2 Dead+1.0 Wind 150 deg+1.0 Ice+1.0 Temp	113.78	3.22	5.57	683.28	-400.49	-0.07
1.2 Dead+1.0 Wind 180 deg+1.0 Ice+1.0 Temp	113.78	0.00	7.49	856.81	-5.94	-0.45
1.2 Dead+1.0 Wind 210 deg+1.0 Ice+1.0 Temp	113.78	-3.95	6.84	765.94	436.42	-0.83
1.2 Dead+1.0 Wind 240 deg+1.0 Ice+1.0 Temp	113.78	-6.38	3.66	420.64	726.64	-0.48
1.2 Dead+1.0 Wind 270 deg+1.0 Ice+1.0 Temp	113.78	-7.56	-0.00	0.43	864.79	-0.38
1.2 Dead+1.0 Wind 300 deg+1.0 Ice+1.0 Temp	113.78	-5.56	-3.20	-392.00	677.59	0.10
1.2 Dead+1.0 Wind 330 deg+1.0 Ice+1.0 Temp	113.78	-3.23	-5.57	-681.78	390.77	0.07
Dead+Wind 0 deg - Service	62.90	-0.00	-7.28	-760.69	-1.75	0.51
Dead+Wind 30 deg - Service	62.90	3.85	-6.65	-684.67	-399.16	0.98
Dead+Wind 60 deg - Service	62.90	6.15	-3.54	-374.50	-652.45	0.53
Dead+Wind 90 deg - Service	62.90	7.48	-0.00	-0.95	-786.37	0.61
Dead+Wind 120 deg - Service	62.90	5.30	3.04	341.91	-600.37	-0.06
Dead+Wind 150 deg - Service	62.90	3.16	5.46	604.63	-351.74	-0.02
Dead+Wind 180 deg - Service	62.90	0.00	7.27	759.05	-1.70	-0.51
Dead+Wind 210 deg - Service	62.90	-3.84	6.65	683.23	393.70	-0.98
Dead+Wind 240 deg - Service	62.90	-6.15	3.53	371.86	648.77	-0.51
Dead+Wind 270 deg - Service	62.90	-7.48	-0.00	-0.90	782.92	-0.61
Dead+Wind 300 deg - Service	62.90	-5.30	-3.05	-344.54	597.16	0.04
Dead+Wind 330 deg - Service	62.90	-3.17	-5.46	-606.04	350.30	0.03

Solution Summary

	Sum of Applied Forces			Sum of Reactions			
Load Comb.	PX K	PY K	PZ K	PX K	PY K	PZ K	% Error
1	0.00	-62.90	0.00	0.00	62.90	-0.00	0.000%
2	-0.01	-75.48	-33.53	0.01	75.48	33.53	0.001%
3	-0.01	-56.61	-33.53	0.01	56.61	33.53	0.001%
4	17.76	-75.48	-30.64	-17.76	75.48	30.64	0.000%
5	17.76	-56.61	-30.64	-17.76	56.61	30.64	0.000%
6	28.35	-75.48	-16.31	-28.35	75.48	16.31	0.000%
7	28.35	-56.61	-16.31	-28.35	56.61	16.31	0.000%
8	34.46	-75.48	-0.01	-34.46	75.48	0.01	0.001%
9	34.46	-56.61	-0.01	-34.46	56.61	0.01	0.001%
10	24.43	-75.48	14.01	-24.43	75.48	-14.01	0.000%
11	24.43	-56.61	14.01	-24.43	56.61	-14.01	0.000%

Load Comb.	Sum of Applied Forces PX K	PY K	PZ K	Sum of Reactions PX K	PY K	PZ K	% Error
12	14.55	-75.48	25.16	-14.55	75.48	-25.16	0.000%
13	14.55	-56.61	25.16	-14.55	56.61	-25.16	0.000%
14	0.01	-75.48	33.52	-0.01	75.48	-33.51	0.001%
15	0.01	-56.61	33.52	-0.01	56.61	-33.51	0.001%
16	-17.69	-75.48	30.63	17.69	75.48	-30.63	0.000%
17	-17.69	-56.61	30.63	17.69	56.61	-30.63	0.000%
18	-28.34	-75.48	16.27	28.34	75.48	-16.27	0.000%
19	-28.34	-56.61	16.27	28.34	56.61	-16.27	0.000%
20	-34.46	-75.48	-0.02	34.46	75.48	0.02	0.001%
21	-34.46	-56.61	-0.02	34.46	56.61	0.02	0.001%
22	-24.43	-75.48	-14.06	24.43	75.48	14.06	0.000%
23	-24.43	-56.61	-14.06	24.43	56.61	14.06	0.000%
24	-14.61	-75.48	-25.17	14.61	75.48	25.17	0.000%
25	-14.61	-56.61	-25.17	14.61	56.61	25.17	0.000%
26	0.00	-113.78	0.00	0.00	113.78	-0.00	0.000%
27	-0.00	-113.78	-7.49	0.00	113.78	7.49	0.000%
28	3.96	-113.78	-6.84	-3.96	113.78	6.84	0.000%
29	6.38	-113.78	-3.67	-6.38	113.78	3.67	0.000%
30	7.56	-113.78	-0.00	-7.56	113.78	0.00	0.000%
31	5.55	-113.78	3.19	-5.55	113.78	-3.19	0.000%
32	3.22	-113.78	5.57	-3.22	113.78	-5.57	0.000%
33	0.00	-113.78	7.49	-0.00	113.78	-7.49	0.000%
34	-3.95	-113.78	6.84	3.95	113.78	-6.84	0.000%
35	-6.38	-113.78	3.66	6.38	113.78	-3.66	0.000%
36	-7.56	-113.78	-0.00	7.56	113.78	0.00	0.000%
37	-5.56	-113.78	-3.20	5.56	113.78	3.20	0.000%
38	-3.23	-113.78	-5.57	3.23	113.78	5.57	0.000%
39	-0.00	-62.90	-7.28	0.00	62.90	7.28	0.002%
40	3.85	-62.90	-6.65	-3.85	62.90	6.65	0.000%
41	6.15	-62.90	-3.54	-6.15	62.90	3.54	0.001%
42	7.48	-62.90	-0.00	-7.48	62.90	0.00	0.002%
43	5.30	-62.90	3.04	-5.30	62.90	-3.04	0.001%
44	3.16	-62.90	5.46	-3.16	62.90	-5.46	0.001%
45	0.00	-62.90	7.27	-0.00	62.90	-7.27	0.002%
46	-3.84	-62.90	6.65	3.84	62.90	-6.65	0.001%
47	-6.15	-62.90	3.53	6.15	62.90	-3.53	0.001%
48	-7.48	-62.90	-0.00	7.48	62.90	0.00	0.002%
49	-5.30	-62.90	-3.05	5.30	62.90	3.05	0.001%
50	-3.17	-62.90	-5.46	3.17	62.90	5.46	0.001%

Non-Linear Convergence Results

Load Combination	Converged?	Number of Cycles	Displacement Tolerance	Force Tolerance
1	Yes	6	0.00000001	0.00000001
2	Yes	20	0.00000001	0.00010214
3	Yes	20	0.00000001	0.00007735
4	Yes	25	0.00000001	0.00011335
5	Yes	25	0.00000001	0.00007562
6	Yes	25	0.00000001	0.00010027
7	Yes	24	0.00000001	0.00013770
8	Yes	20	0.00000001	0.00010939
9	Yes	20	0.00000001	0.00008433
10	Yes	25	0.00000001	0.00008868
11	Yes	24	0.00000001	0.00012315
12	Yes	25	0.00000001	0.00009102
13	Yes	24	0.00000001	0.00012621
14	Yes	20	0.00000001	0.00009931
15	Yes	19	0.00000001	0.00014776
16	Yes	25	0.00000001	0.00010617
17	Yes	24	0.00000001	0.00014494
18	Yes	25	0.00000001	0.00010184
19	Yes	24	0.00000001	0.00014020
20	Yes	20	0.00000001	0.00011194
21	Yes	20	0.00000001	0.00008624
22	Yes	25	0.00000001	0.00008979
23	Yes	24	0.00000001	0.00012474
24	Yes	25	0.00000001	0.00009132
25	Yes	24	0.00000001	0.00012662
26	Yes	12	0.00000001	0.00011434
27	Yes	22	0.00000001	0.00012450
28	Yes	23	0.00000001	0.00008580
29	Yes	23	0.00000001	0.00008195
30	Yes	22	0.00000001	0.00012720
31	Yes	22	0.00000001	0.00014163
32	Yes	22	0.00000001	0.00014197
33	Yes	22	0.00000001	0.00012400
34	Yes	23	0.00000001	0.00008311
35	Yes	22	0.00000001	0.00014773
36	Yes	22	0.00000001	0.00012523
37	Yes	22	0.00000001	0.00014045
38	Yes	22	0.00000001	0.00014048
39	Yes	16	0.00012639	0.00008350
40	Yes	19	0.00000001	0.00008816
41	Yes	18	0.00000001	0.00012972
42	Yes	16	0.00012626	0.00009228
43	Yes	18	0.00000001	0.00011425
44	Yes	18	0.00000001	0.00011983
45	Yes	16	0.00012637	0.00008283
46	Yes	18	0.00000001	0.00013402
47	Yes	18	0.00000001	0.00013994
48	Yes	16	0.00012624	0.00009207
49	Yes	18	0.00000001	0.00011779
50	Yes	18	0.00000001	0.00011854

Maximum Tower Deflections - Service Wind

Section No.	Elevation ft	Horz. Deflection in	Gov. Load Comb.	Tilt °	Twist °
L1	150 - 145	22.6608	40	1.5919	0.0030
L2	145 - 140	21.0070	40	1.5630	0.0033
L3	140 - 135	19.3965	40	1.5098	0.0033
L4	135 - 130	17.8536	40	1.4325	0.0029
L5	130 - 128.5	16.4067	40	1.3270	0.0024
L6	128.5 - 128.25	15.9954	40	1.2914	0.0023
L7	128.25 - 123.25	15.9279	40	1.2892	0.0023
L8	123.25 - 118.25	14.6031	40	1.2403	0.0021
L9	118.25 - 113.25	13.3336	40	1.1835	0.0020
L10	113.25 - 109	12.1283	40	1.1175	0.0018
L11	109 - 108.75	11.1614	40	1.0545	0.0017
L12	108.75 - 104.17	11.1062	40	1.0513	0.0017

Section No.	Elevation ft	Horz. Deflection in	Gov. Load Comb.	Tilt °	Twist °
L13	104.17 - 103.92	10.1278	40	0.9883	0.0015
L14	103.92 - 103.17	10.0761	40	0.9857	0.0015
L15	103.17 - 102.92	9.9219	40	0.9776	0.0015
L16	102.92 - 102.42	9.8708	40	0.9752	0.0015
L17	102.42 - 102.17	9.7690	40	0.9704	0.0015
L18	102.17 - 100.92	9.7182	40	0.9676	0.0015
L19	100.92 - 100.67	9.4668	40	0.9535	0.0015
L20	100.67 - 99.58	9.4169	40	0.9509	0.0015
L21	99.58 - 99.33	9.2012	40	0.9393	0.0015
L22	99.33 - 95.25	9.1521	40	0.9372	0.0014
L23	95.25 - 95	8.3665	40	0.9013	0.0014
L24	95 - 90	8.3194	40	0.8985	0.0014
L25	90 - 85	7.4087	40	0.8405	0.0013
L26	85 - 80.5	6.5609	40	0.7785	0.0012
L27	80.5 - 80.25	5.8549	40	0.7196	0.0011
L28	80.25 - 75.25	5.8173	40	0.7171	0.0011
L29	75.25 - 73.58	5.0931	40	0.6659	0.0011
L30	73.58 - 73.33	4.8632	40	0.6486	0.0010
L31	73.33 - 69	4.8293	40	0.6460	0.0010
L32	72 - 67	4.6513	40	0.6318	0.0010
L33	67 - 66.75	4.0062	40	0.5938	0.0010
L34	66.75 - 66.5	3.9751	40	0.5911	0.0009
L35	66.5 - 61.5	3.9443	40	0.5886	0.0009
L36	61.5 - 56.5	3.3553	40	0.5363	0.0009
L37	56.5 - 51.5	2.8219	40	0.4826	0.0008
L38	51.5 - 48.25	2.3448	40	0.4286	0.0007
L39	48.25 - 48	2.0650	40	0.3933	0.0006
L40	48 - 44.25	2.0445	40	0.3912	0.0006
L41	44.25 - 44	1.7497	40	0.3595	0.0006
L42	44 - 43.08	1.7310	40	0.3575	0.0006
L43	43.08 - 42.83	1.6628	40	0.3502	0.0006
L44	42.83 - 37.83	1.6445	40	0.3482	0.0006
L45	37.83 - 30	1.3014	40	0.3072	0.0005
L46	34 - 29	1.0676	40	0.2758	0.0004
L47	29 - 24	0.7897	40	0.2515	0.0004
L48	24 - 23.75	0.5479	40	0.2105	0.0003
L49	23.75 - 23.5	0.5369	40	0.2085	0.0003
L50	23.5 - 18.5	0.5260	40	0.2065	0.0003
L51	18.5 - 13.5	0.3314	40	0.1654	0.0003
L52	13.5 - 11	0.1798	40	0.1242	0.0002
L53	11 - 10.75	0.1201	40	0.1036	0.0002
L54	10.75 - 6	0.1148	40	0.1012	0.0002
L55	6 - 5.75	0.0369	40	0.0555	0.0001
L56	5.75 - 3.25	0.0341	40	0.0535	0.0001
L57	3.25 - 3	0.0113	40	0.0333	0.0001
L58	3 - 0	0.0097	40	0.0308	0.0000

Critical Deflections and Radius of Curvature - Service Wind

Elevation ft	Appurtenance	Gov. Load Comb.	Deflection in	Tilt °	Twist °	Radius of Curvature ft
150.0000	7770.00	40	22.6608	1.5919	0.0031	6928
147.0000	TME-RRUS-11	40	21.6654	1.5765	0.0033	6928
143.0000	VHLP2-23	40	20.3561	1.5451	0.0034	5543
138.0000	HORIZON COMPACT	40	18.7698	1.4811	0.0032	3822
120.0000	AIR -32 B2A/B66AA	40	13.7711	1.2040	0.0021	4923
109.5000	Bridge Stiffener (76" x 10.5" x 1.25")	40	11.2722	1.0611	0.0017	4005
99.0000	BXA-70063/4CF w/ Mount Pipe	40	9.0874	0.9346	0.0015	5974

Maximum Tower Deflections - Design Wind

Section No.	Elevation ft	Horz. Deflection in	Gov. Load Comb.	Tilt °	Twist °
L1	150 - 145	105.1277	4	7.3962	0.0133
L2	145 - 140	97.4768	4	7.2658	0.0147
L3	140 - 135	90.0208	4	7.0215	0.0146
L4	135 - 130	82.8728	4	6.6635	0.0128
L5	130 - 128.5	76.1662	4	6.1728	0.0106
L6	128.5 - 128.25	74.2589	4	6.0073	0.0101
L7	128.25 - 123.25	73.9456	4	5.9971	0.0100
L8	123.25 - 118.25	67.8010	4	5.7694	0.0094
L9	118.25 - 113.25	61.9119	4	5.5048	0.0087
L10	113.25 - 109	56.3193	4	5.1973	0.0081
L11	109 - 108.75	51.8324	4	4.9035	0.0075
L12	108.75 - 104.17	51.5766	4	4.8885	0.0075
L13	104.17 - 103.92	47.0357	4	4.5949	0.0069
L14	103.92 - 103.17	46.7959	4	4.5826	0.0069
L15	103.17 - 102.92	46.0804	4	4.5448	0.0068
L16	102.92 - 102.42	45.8431	4	4.5338	0.0068
L17	102.42 - 102.17	45.3704	4	4.5114	0.0068
L18	102.17 - 100.92	45.1350	4	4.4982	0.0067
L19	100.92 - 100.67	43.9679	4	4.4328	0.0066
L20	100.67 - 99.58	43.7365	4	4.4204	0.0066
L21	99.58 - 99.33	42.7353	4	4.3663	0.0065
L22	99.33 - 95.25	42.5073	4	4.3567	0.0065
L23	95.25 - 95	38.8612	4	4.1899	0.0063
L24	95 - 90	38.6425	4	4.1770	0.0063
L25	90 - 85	34.4148	4	3.9073	0.0059
L26	85 - 80.5	30.4780	4	3.6195	0.0056
L27	80.5 - 80.25	27.1990	4	3.3454	0.0052
L28	80.25 - 75.25	27.0243	4	3.3340	0.0052
L29	75.25 - 73.58	23.6605	4	3.0958	0.0048
L30	73.58 - 73.33	22.5926	4	3.0155	0.0047
L31	73.33 - 69	22.4351	4	3.0033	0.0047
L32	72 - 67	21.6084	4	2.9371	0.0046
L33	67 - 66.75	18.6111	4	2.7606	0.0043
L34	66.75 - 66.5	18.4670	4	2.7480	0.0043
L35	66.5 - 61.5	18.3235	4	2.7362	0.0043
L36	61.5 - 56.5	15.5873	4	2.4929	0.0039
L37	56.5 - 51.5	13.1088	4	2.2434	0.0035
L38	51.5 - 48.25	10.8921	4	1.9922	0.0031
L39	48.25 - 48	9.5925	4	1.8276	0.0029
L40	48 - 44.25	9.4971	4	1.8179	0.0029
L41	44.25 - 44	8.1277	4	1.6705	0.0026
L42	44 - 43.08	8.0405	4	1.6612	0.0026
L43	43.08 - 42.83	7.7237	4	1.6273	0.0026
L44	42.83 - 37.83	7.6388	4	1.6181	0.0025
L45	37.83 - 30	6.0447	4	1.4274	0.0022
L46	34 - 29	4.9584	4	1.2816	0.0020
L47	29 - 24	3.6677	4	1.1683	0.0018
L48	24 - 23.75	2.5444	4	0.9779	0.0015
L49	23.75 - 23.5	2.4934	4	0.9685	0.0015
L50	23.5 - 18.5	2.4429	4	0.9591	0.0015
L51	18.5 - 13.5	1.5388	4	0.7684	0.0012
L52	13.5 - 11	0.8348	4	0.5768	0.0009
L53	11 - 10.75	0.5578	4	0.4813	0.0008
L54	10.75 - 6	0.5329	4	0.4698	0.0007
L55	6 - 5.75	0.1714	4	0.2575	0.0004
L56	5.75 - 3.25	0.1581	4	0.2483	0.0004
L57	3.25 - 3	0.0526	4	0.1547	0.0002
L58	3 - 0	0.0448	4	0.1430	0.0002

Critical Deflections and Radius of Curvature - Design Wind

Elevation ft	Appurtenance	Gov. Load Comb.	Deflection in	Tilt °	Twist °	Radius of Curvature ft
150.0000	7770.00	4	105.1277	7.3962	0.0144	1566
147.0000	TME-RRUS-11	4	100.5232	7.3269	0.0153	1566

Elevation ft	Appurtenance	Gov. Load Comb.	Deflection in	Tilt °	Twist °	Radius of Curvature ft
143.0000	VHLP2-23	4	94.4638	7.1840	0.0159	1245
138.0000	HORIZON COMPACT	4	87.1177	6.8888	0.0151	848
120.0000	AIR -32 B2A/B66AA	4	63.9415	5.6003	0.0096	1077
109.5000	Bridge Stiffener (76" x 10.5" x 1.25")	4	52.3467	4.9345	0.0079	874
99.0000	BXA-70063/4CF w/ Mount Pipe	4	42.2072	4.3444	0.0067	1301

Compression Checks
Pole Design Data

Section No.	Elevation ft	Size	L ft	L_u ft	Kl/r	A in^2	P_u K
L1	150 - 145 (1)	TP15.7317x15x0.2188	5.0000	0.0000	0.0	10.9269	-4.09
L2	145 - 140 (2)	TP16.4634x15.7317x0.2188	5.0000	0.0000	0.0	11.4423	-4.42
L3	140 - 135 (3)	TP17.1951x16.4634x0.2188	5.0000	0.0000	0.0	11.9577	-10.55
L4	135 - 130 (4)	TP17.9268x17.1951x0.2188	5.0000	0.0000	0.0	12.4731	-10.98
L5	130 - 128.5 (5)	TP18.1463x17.9268x0.2188	1.5000	0.0000	0.0	12.6277	-11.11
L6	128.5 - 128.25 (6)	TP18.1829x18.1463x0.6688	0.2500	0.0000	0.0	37.7146	-11.16
L7	128.25 - 123.25 (7)	TP18.9146x18.1829x0.6438	5.0000	0.0000	0.0	37.8733	-11.95
L8	123.25 - 118.25 (8)	TP19.6463x18.9146x0.6188	5.0000	0.0000	0.0	37.9101	-17.09
L9	118.25 - 113.25 (9)	TP20.378x19.6463x0.6063	5.0000	0.0000	0.0	38.5970	-17.97
L10	113.25 - 109 (10)	TP21x20.378x0.5938	4.2500	0.0000	0.0	39.0142	-19.70
L11	109 - 108.75 (11)	TP21.0378x21x0.725	0.2500	0.0000	0.0	47.4201	-19.76
L12	108.75 - 104.17 (12)	TP21.7293x21.0378x0.7	4.5800	0.0000	0.0	47.4001	-20.72
L13	104.17 - 103.92 (13)	TP21.7671x21.7293x0.975	0.2500	0.0000	0.0	65.2767	-20.80
L14	103.92 - 103.17 (14)	TP21.8803x21.7671x0.95	0.7500	0.0000	0.0	64.0259	-21.02
L15	103.17 - 102.92 (15)	TP21.9181x21.8803x1.125	0.2500	0.0000	0.0	75.3229	-21.11
L16	102.92 - 102.42 (16)	TP21.9936x21.9181x1.1	0.5000	0.0000	0.0	74.0051	-21.28
L17	102.42 - 102.17 (17)	TP22.0313x21.9936x0.925	0.2500	0.0000	0.0	62.8652	-21.36
L18	102.17 - 100.92 (18)	TP22.2201x22.0313x0.925	1.2500	0.0000	0.0	63.4274	-21.74
L19	100.92 - 100.67 (19)	TP22.2578x22.2201x1	0.2500	0.0000	0.0	68.4502	-21.83
L20	100.67 - 99.58 (20)	TP22.4224x22.2578x1	1.0900	0.0000	0.0	68.9802	-22.17
L21	99.58 - 99.33 (21)	TP22.4602x22.4224x1.375	0.2500	0.0000	0.0	93.3546	-22.26
L22	99.33 - 95.25 (22)	TP23.0763x22.4602x1.325	4.0800	0.0000	0.0	92.8017	-26.05
L23	95.25 - 95 (23)	TP23.114x23.0763x1.025	0.2500	0.0000	0.0	72.9047	-26.13
L24	95 - 90 (24)	TP23.869x23.114x1	5.0000	0.0000	0.0	73.6382	-27.60
L25	90 - 85 (25)	TP24.624x23.869x0.9625	5.0000	0.0000	0.0	73.3329	-29.11
L26	85 - 80.5 (26)	TP25.3035x24.624x0.925	4.5000	0.0000	0.0	72.6114	-30.48
L27	80.5 - 80.25 (27)	TP25.3413x25.3035x1.3	0.2500	0.0000	0.0	100.6370	-30.59
L28	80.25 - 75.25 (28)	TP26.0963x25.3413x1.25	5.0000	0.0000	0.0	100.0060	-32.50
L29	75.25 - 73.58 (29)	TP26.3484x26.0963x1.225	1.6700	0.0000	0.0	99.0993	-33.15
L30	73.58 - 73.33 (30)	TP26.3862x26.3484x1.225	0.2500	0.0000	0.0	99.2482	-33.26
L31	73.33 - 69 (31)	TP27.04x26.3862x1.2	4.3300	0.0000	0.0	98.0954	-33.77
L32	69 - 67 (32)	TP26.8969x26.087x1.2625	5.0000	0.0000	0.0	104.2100	-36.82
L33	67 - 66.75 (33)	TP26.9374x26.8969x1.2625	0.2500	0.0000	0.0	104.3750	-36.93
L34	66.75 - 66.5 (34)	TP26.9779x26.9374x1.3625	0.2500	0.0000	0.0	112.3810	-37.04
L35	66.5 - 61.5 (35)	TP27.7878x26.9779x1.3125	5.0000	0.0000	0.0	111.8910	-39.21
L36	61.5 - 56.5 (36)	TP28.5976x27.7878x1.2625	5.0000	0.0000	0.0	111.1240	-41.42
L37	56.5 - 51.5 (37)	TP29.4075x28.5976x1.2375	5.0000	0.0000	0.0	112.2500	-43.65
L38	51.5 - 48.25 (38)	TP29.9339x29.4075x1.2125	3.2500	0.0000	0.0	112.1360	-45.11
L39	48.25 - 48 (39)	TP29.9744x29.9339x1.6375	0.2500	0.0000	0.0	149.4140	-45.25
L40	48 - 44.25 (40)	TP30.5818x29.9744x1.6125	3.7500	0.0000	0.0	150.4160	-47.22
L41	44.25 - 44 (41)	TP30.6223x30.5818x1.7125	0.2500	0.0000	0.0	159.4160	-47.37
L42	44 - 43.08 (42)	TP30.7714x30.6223x1.7125	0.9200	0.0000	0.0	160.2380	-47.88
L43	43.08 - 42.83 (43)	TP30.8118x30.7714x1.7125	0.2500	0.0000	0.0	160.4610	-48.03
L44	42.83 - 37.83 (44)	TP31.6217x30.8118x1.6375	5.0000	0.0000	0.0	158.0990	-50.83
L45	37.83 - 30 (45)	TP32.89x31.6217x1.6125	7.8300	0.0000	0.0	159.0370	-52.99
L46	30 - 29 (46)	TP32.4616x31.6171x1.7063	5.0000	0.0000	0.0	168.9790	-58.06
L47	29 - 24 (47)	TP33.3062x32.4616x1.6563	5.0000	0.0000	0.0	168.7980	-61.11
L48	24 - 23.75 (48)	TP33.3484x33.3062x1.6563	0.2500	0.0000	0.0	169.0230	-61.27
L49	23.75 - 23.5 (49)	TP33.3906x33.3484x1.6563	0.2500	0.0000	0.0	169.2480	-61.42
L50	23.5 - 18.5 (50)	TP34.2352x33.3906x1.6063	5.0000	0.0000	0.0	168.7660	-64.49
L51	18.5 - 13.5 (51)	TP35.0797x34.2352x1.5563	5.0000	0.0000	0.0	167.9950	-67.60
L52	13.5 - 11 (52)	TP35.502x35.0797x1.5313	2.5000	0.0000	0.0	167.5020	-69.17
L53	11 - 10.75 (53)	TP35.5442x35.502x1.2313	0.2500	0.0000	0.0	136.0430	-69.33
L54	10.75 - 6 (54)	TP36.3465x35.5442x1.2563	4.7500	0.0000	0.0	141.9500	-72.25
L55	6 - 5.75 (55)	TP36.3888x36.3465x1.5313	0.2500	0.0000	0.0	171.8750	-72.42

Section No.	Elevation ft	Size	L ft	L_u ft	Kl/r	A in^2	P_u K
L56	5.75 - 3.25 (56)	TP36.811x36.3888x1.5063	2.5000	0.0000	0.0	171.2380	-73.91
L57	3.25 - 3 (57)	TP36.8533x36.811x1.1563	0.2500	0.0000	0.0	132.9100	-74.04
L58	3 - 0 (58)	TP37.36x36.8533x1.1313	3.0000	0.0000	0.0	131.9730	-75.47

Pole Bending Design Data

Section No.	Elevation ft	Size	M_{ux} kip-ft
L1	150 - 145 (1)	TP15.7317x15x0.2188	44.95
L2	145 - 140 (2)	TP16.4634x15.7317x0.2188	80.22
L3	140 - 135 (3)	TP17.1951x16.4634x0.2188	133.44
L4	135 - 130 (4)	TP17.9268x17.1951x0.2188	192.58
L5	130 - 128.5 (5)	TP18.1463x17.9268x0.2188	210.57
L6	128.5 - 128.25 (6)	TP18.1829x18.1463x0.6688	213.57
L7	128.25 - 123.25 (7)	TP18.9146x18.1829x0.6438	274.68
L8	123.25 - 118.25 (8)	TP19.6463x18.9146x0.6188	347.80
L9	118.25 - 113.25 (9)	TP20.378x19.6463x0.6063	441.07
L10	113.25 - 109 (10)	TP21x20.378x0.5938	522.76
L11	109 - 108.75 (11)	TP21.0378x21x0.725	527.77
L12	108.75 - 104.17 (12)	TP21.7293x21.0378x0.7	620.68
L13	104.17 - 103.92 (13)	TP21.7671x21.7293x0.975	625.82
L14	103.92 - 103.17 (14)	TP21.8803x21.7671x0.95	641.29
L15	103.17 - 102.92 (15)	TP21.9181x21.8803x1.125	646.46
L16	102.92 - 102.42 (16)	TP21.9936x21.9181x1.1	656.83
L17	102.42 - 102.17 (17)	TP22.0313x21.9936x0.925	662.02
L18	102.17 - 100.92 (18)	TP22.2201x22.0313x0.925	688.11
L19	100.92 - 100.67 (19)	TP22.2578x22.2201x1	693.36
L20	100.67 - 99.58 (20)	TP22.4224x22.2578x1	716.30
L21	99.58 - 99.33 (21)	TP22.4602x22.4224x1.375	721.58
L22	99.33 - 95.25 (22)	TP23.0763x22.4602x1.325	820.49
L23	95.25 - 95 (23)	TP23.114x23.0763x1.025	826.50
L24	95 - 90 (24)	TP23.869x23.114x1	948.45
L25	90 - 85 (25)	TP24.624x23.869x0.9625	1073.58
L26	85 - 80.5 (26)	TP25.3035x24.624x0.925	1188.84
L27	80.5 - 80.25 (27)	TP25.3413x25.3035x1.3	1195.33
L28	80.25 - 75.25 (28)	TP26.0963x25.3413x1.25	1326.68
L29	75.25 - 73.58 (29)	TP26.3484x26.0963x1.225	1371.33
L30	73.58 - 73.33 (30)	TP26.3862x26.3484x1.225	1378.04
L31	73.33 - 69 (31)	TP27.04x26.3862x1.2	1413.91
L32	69 - 67 (32)	TP26.8969x26.087x1.2625	1551.19
L33	67 - 66.75 (33)	TP26.9374x26.8969x1.2625	1558.15
L34	66.75 - 66.5 (34)	TP26.9779x26.9374x1.3625	1565.12
L35	66.5 - 61.5 (35)	TP27.7878x26.9779x1.3125	1705.97
L36	61.5 - 56.5 (36)	TP28.5976x27.7878x1.2625	1849.71
L37	56.5 - 51.5 (37)	TP29.4075x28.5976x1.2375	1996.22
L38	51.5 - 48.25 (38)	TP29.9339x29.4075x1.2125	2092.97
L39	48.25 - 48 (39)	TP29.9744x29.9339x1.6375	2100.47
L40	48 - 44.25 (40)	TP30.5818x29.9744x1.6125	2213.89
L41	44.25 - 44 (41)	TP30.6223x30.5818x1.7125	2221.52
L42	44 - 43.08 (42)	TP30.7714x30.6223x1.7125	2249.66
L43	43.08 - 42.83 (43)	TP30.8118x30.7714x1.7125	2257.32
L44	42.83 - 37.83 (44)	TP31.6217x30.8118x1.6375	2412.27
L45	37.83 - 30 (45)	TP32.89x31.6217x1.6125	2533.03
L46	30 - 29 (46)	TP32.4616x31.6171x1.7063	2693.62
L47	29 - 24 (47)	TP33.3062x32.4616x1.6563	2857.23
L48	24 - 23.75 (48)	TP33.3484x33.3062x1.6563	2865.48
L49	23.75 - 23.5 (49)	TP33.3906x33.3484x1.6563	2873.74
L50	23.5 - 18.5 (50)	TP34.2352x33.3906x1.6063	3040.32
L51	18.5 - 13.5 (51)	TP35.0797x34.2352x1.5563	3209.56
L52	13.5 - 11 (52)	TP35.502x35.0797x1.5313	3295.16
L53	11 - 10.75 (53)	TP35.5442x35.502x1.2313	3303.76
L54	10.75 - 6 (54)	TP36.3465x35.5442x1.2563	3468.19
L55	6 - 5.75 (55)	TP36.3888x36.3465x1.5313	3476.91
L56	5.75 - 3.25 (56)	TP36.811x36.3888x1.5063	3564.40
L57	3.25 - 3 (57)	TP36.8533x36.811x1.1563	3573.18
L58	3 - 0 (58)	TP37.36x36.8533x1.1313	3679.03

Pole Shear Design Data

Section No.	Elevation ft	Size	Actual V_u K
L1	150 - 145 (1)	TP15.7317x15x0.2188	6.71
L2	145 - 140 (2)	TP16.4634x15.7317x0.2188	7.39
L3	140 - 135 (3)	TP17.1951x16.4634x0.2188	11.70
L4	135 - 130 (4)	TP17.9268x17.1951x0.2188	11.96
L5	130 - 128.5 (5)	TP18.1463x17.9268x0.2188	12.04
L6	128.5 - 128.25 (6)	TP18.1829x18.1463x0.6688	12.04
L7	128.25 - 123.25 (7)	TP18.9146x18.1829x0.6438	12.40
L8	123.25 - 118.25 (8)	TP19.6463x18.9146x0.6188	18.39
L9	118.25 - 113.25 (9)	TP20.378x19.6463x0.6063	18.94
L10	113.25 - 109 (10)	TP21x20.378x0.5938	20.02
L11	109 - 108.75 (11)	TP21.0378x21x0.725	20.05
L12	108.75 - 104.17 (12)	TP21.7293x21.0378x0.7	20.56
L13	104.17 - 103.92 (13)	TP21.7671x21.7293x0.975	20.60
L14	103.92 - 103.17 (14)	TP21.8803x21.7671x0.95	20.68
L15	103.17 - 102.92 (15)	TP21.9181x21.8803x1.125	20.72
L16	102.92 - 102.42 (16)	TP21.9936x21.9181x1.1	20.78
L17	102.42 - 102.17 (17)	TP22.0313x21.9936x0.925	20.82
L18	102.17 - 100.92 (18)	TP22.2201x22.0313x0.925	20.97
L19	100.92 - 100.67 (19)	TP22.2578x22.2201x1	21.00
L20	100.67 - 99.58 (20)	TP22.4224x22.2578x1	21.13
L21	99.58 - 99.33 (21)	TP22.4602x22.4224x1.375	21.18
L22	99.33 - 95.25 (22)	TP23.0763x22.4602x1.325	24.04
L23	95.25 - 95 (23)	TP23.114x23.0763x1.025	24.09
L24	95 - 90 (24)	TP23.869x23.114x1	24.72
L25	90 - 85 (25)	TP24.624x23.869x0.9625	25.35
L26	85 - 80.5 (26)	TP25.3035x24.624x0.925	25.91
L27	80.5 - 80.25 (27)	TP25.3413x25.3035x1.3	25.94
L28	80.25 - 75.25 (28)	TP26.0963x25.3413x1.25	26.63
L29	75.25 - 73.58 (29)	TP26.3484x26.0963x1.225	26.87
L30	73.58 - 73.33 (30)	TP26.3862x26.3484x1.225	26.89
L31	73.33 - 69 (31)	TP27.04x26.3862x1.2	27.07
L32	69 - 67 (32)	TP26.8969x26.087x1.2625	27.83
L33	67 - 66.75 (33)	TP26.9374x26.8969x1.2625	27.86
L34	66.75 - 66.5 (34)	TP26.9779x26.9374x1.3625	27.89
L35	66.5 - 61.5 (35)	TP27.7878x26.9779x1.3125	28.48
L36	61.5 - 56.5 (36)	TP28.5976x27.7878x1.2625	29.05
L37	56.5 - 51.5 (37)	TP29.4075x28.5976x1.2375	29.59
L38	51.5 - 48.25 (38)	TP29.9339x29.4075x1.2125	29.99
L39	48.25 - 48 (39)	TP29.9744x29.9339x1.6375	30.01
L40	48 - 44.25 (40)	TP30.5818x29.9744x1.6125	30.51
L41	44.25 - 44 (41)	TP30.6223x30.5818x1.7125	30.53
L42	44 - 43.08 (42)	TP30.7714x30.6223x1.7125	30.66
L43	43.08 - 42.83 (43)	TP30.8118x30.7714x1.7125	30.68
L44	42.83 - 37.83 (44)	TP31.6217x30.8118x1.6375	31.32
L45	37.83 - 30 (45)	TP32.89x31.6217x1.6125	31.77
L46	30 - 29 (46)	TP32.4616x31.6171x1.7063	32.47
L47	29 - 24 (47)	TP33.3062x32.4616x1.6563	33.01
L48	24 - 23.75 (48)	TP33.3484x33.3062x1.6563	33.03
L49	23.75 - 23.5 (49)	TP33.3906x33.3484x1.6563	33.05
L50	23.5 - 18.5 (50)	TP34.2352x33.3906x1.6063	33.60
L51	18.5 - 13.5 (51)	TP35.0797x34.2352x1.5563	34.13
L52	13.5 - 11 (52)	TP35.502x35.0797x1.5313	34.40
L53	11 - 10.75 (53)	TP35.5442x35.502x1.2313	34.40
L54	10.75 - 6 (54)	TP36.3465x35.5442x1.2563	34.88
L55	6 - 5.75 (55)	TP36.3888x36.3465x1.5313	34.87
L56	5.75 - 3.25 (56)	TP36.811x36.3888x1.5063	35.15
L57	3.25 - 3 (57)	TP36.8533x36.811x1.1563	35.15
L58	3 - 0 (58)	TP37.36x36.8533x1.1313	35.44

APPENDIX B

BASE LEVEL DRAWING

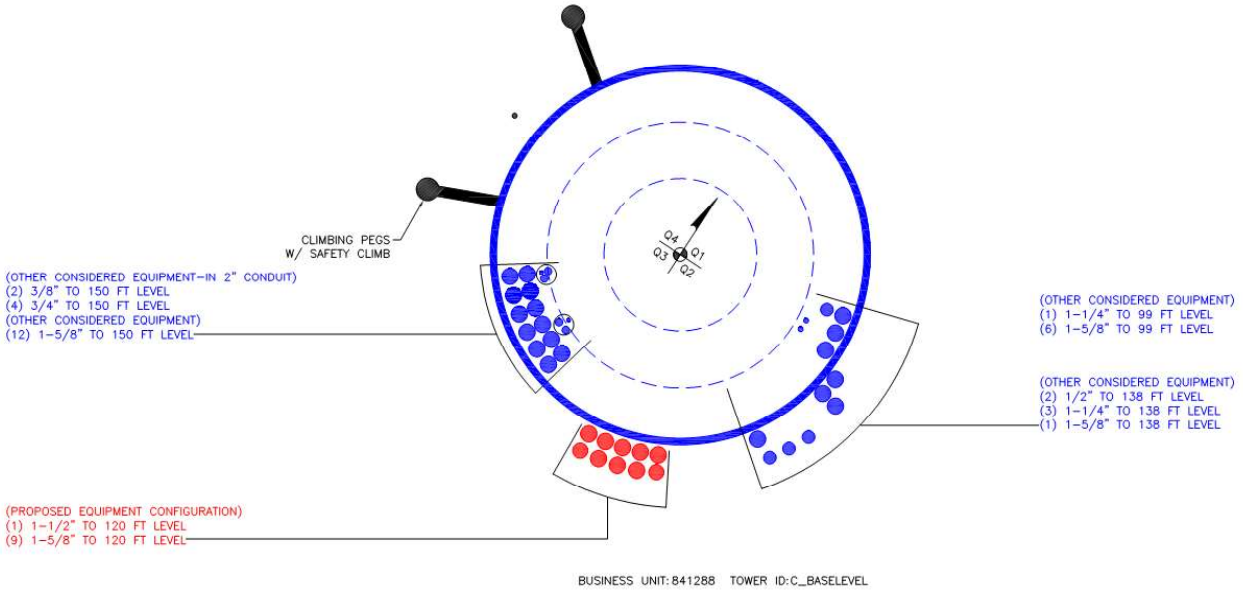
CLIMBING PEGS
W/ SAFETY CLIMB
(OTHER CONSIDERED EQUIPMENT-IN 2" CONDUIT)
(2) 3/8" TO 150 FT LEVEL
(4) 3/4" TO 150 FT LEVEL
(OTHER CONSIDERED EQUIPMENT)
(12) 1-5/8" TO 150 FT LEVEL
Q4
Q1
Q3
Q2
(OTHER CONSIDERED EQUIPMENT)
(1) 1-1/4" TO 99 FT LEVEL
(6) 1-5/8" TO 99 FT LEVEL
(OTHER CONSIDERED EQUIPMENT)
(2) 1/2" TO 138 FT LEVEL
(3) 1-1/4" TO 138 FT LEVEL
(1) 1-5/8" TO 138 FT LEVEL
(PROPOSED EQUIPMENT CONFIGURATION)
(1) 1-1/2" TO 120 FT LEVEL
(9) 1-5/8" TO 120 FT LEVEL
BUSINESS UNIT: 841288 TOWER ID: C_BASELEVEL

APPENDIX C

ADDITIONAL CALCULATIONS

CCIpole

per TIA-222- H

Site BU: 841288

Work Order: 1861586

CROWN CASTLE

Copyright © 2019 Crown Castle

Pole Geometry

	Pole Height Above Base (ft)	Section Length (ft)	Lap Splice Length (ft)	Number of Sides	Top Diameter (in)	Bottom Diameter (in)	Wall Thickness (in)	Bend Radius (in)	Pole Material
1	150	41	0	12	15	21	0.21875	Auto	A572-50
2	109	40	3	12	21.00	27.04	0.25	Auto	A572-50
3	72	42	4	12	26.09	32.89	0.3125	Auto	A572-50
4	34	34	0	12	31.62	37.36	0.4063	Auto	A572-50

Reinforcement Configuration

	Bottom Effective Elevation (ft)	Top Effective Elevation (ft)	Type	Model	Number	1	2	3	4	5	6	7	8	9	10	11	12
1	0	11	solid round	yidag; (2.5 Max); (2.5	4			o			o			o			o
2	11	48.25	solid round	yidag; (2.5 Max); (2.5	4			o			o			o			o
3	3.25	23.75	plate	6.5 x 1.25; (1) (1.1875	4		o			o			o			o	
4	23.75	44.25	plate	6.5 x 1.25; (1) (1.1875	4		o			o			o			o	
5	44.25	66.75	plate	5 x 1.25; (1) (1.1875)	4		o			o			o			o	
6	66.75	80.5	plate	4 x 1.25; (1) (1.1875)	4			o			o			o			o
7	95.25	109	plate	5 x 1.25; (1) (1.1875)	2		o			o							
8	95.25	100.92	plate	5 x 1.25; (1) (1.1875)	1									o			
9	0	0	plate	5 x 1.25; (1) (1.1875)	1												o
10	100.92	109	plate	5 x 1.25; (1) (1.1875)	1								o				
11	102.42	109	plate	5 x 1.25; (1) (1.1875)	1											o	
12	109	128.5	plate	4 x 1.25; (1) (1.1875)	4		o			o			o			o	
13	6	43.08	plate	inst pole w/ FP 6 x 1; (	1	o											
14	11	43.08	plate	inst pole w/ FP 6 x 1; (	2				o						o		
15	6	43.08	plate	inst pole w/ FP 6 x 1; (	1							o					
16	43.08	73.58	plate	inst pole w/ FP 6 x 1; (	4	o			o			o			o		
17	73.58	104.17	plate	inst pole w/ FP 6 x 1; (	2	o									o		
18	73.58	99.58	plate	inst pole w/ FP 6 x 1; (	1				o								
19	73.58	103.17	plate	inst pole w/ FP 6 x 1; (	1							o					
20	0	6	plate	FP 1.25 x 6.75_1	2		c						c				
21	0	11	plate	FP 1.25 x 6.75_1	2					c						c	
22																	

Reinforcement Details

	B (in)	H (in)	Gross Area (in^2)	Pole Face to Centroid (in)	Bottom Termination Length (in)	Top Termination Length (in)	L_u (in)	Net Area (in^2)	Bolt Hole Size (in)	Reinforcement Material
1	-	-	4.908738521	3.9375	n/a	n/a	34.440	4.909	0.0000	A722-07
2	-	-	4.908738521	3.9375	n/a	n/a	34.440	4.909	0.0000	A722-07
3	6.5	1.25	8.125	0.625	33.000	33.000	19.000	6.563	1.1875	A572-65
4	6.5	1.25	8.125	0.625	33.000	33.000	19.000	6.563	1.1875	A572-65
5	5	1.25	6.25	0.625	27.000	27.000	18.000	4.688	1.1875	A572-65
6	4	1.25	5	0.625	18.000	18.000	18.000	3.438	1.1875	A572-65
7	5	1.25	6.25	0.625	27.000	27.000	18.000	4.688	1.1875	A572-65
8	5	1.25	6.25	0.625	27.000	27.000	18.000	4.688	1.1875	A572-65
9	5	1.25	6.25	0.625	n/a	n/a	18.000	4.688	1.1875	A572-65
10	5	1.25	6.25	0.625	27.000	27.000	18.000	4.688	1.1875	A572-65
11	5	1.25	6.25	0.625	27.000	27.000	18.000	4.688	1.1875	A572-65
12	4	1.25	5	0.625	18.000	18.000	18.000	3.438	1.1875	A572-65
13	5.40898723	1.941213679	10.5	0.970606839	45.000	54.000	17.000	8.073	1.1875	A572-65
14	5.40898723	1.941213679	10.5	0.970606839	39.000	54.000	17.000	8.073	1.1875	A572-65
15	5.40898723	1.941213679	10.5	0.970606839	39.000	54.000	17.000	8.073	1.1875	A572-65
16	5.40898723	1.941213679	10.5	0.970606839	54.000	54.000	20.000	8.073	1.1875	A572-65
17	5.40898723	1.941213679	10.5	0.970606839	54.000	54.000	20.000	8.073	1.1875	A572-65
18	5.40898723	1.941213679	10.5	0.970606839	54.000	54.000	20.000	8.073	1.1875	A572-65
19	5.40898723	1.941213679	10.5	0.970606839	54.000	54.000	20.000	8.073	1.1875	A572-65
20	1.25	6.75	8.4375	3.375	n/a	n/a	6.000	8.438	0.0000	A572-65
21	1.25	6.75	8.4375	3.375	n/a	n/a	6.000	8.438	0.0000	A572-65

TNX Geometry Input

Increment (ft): 5 Export to TNX

	Section Height (ft)	Section Length (ft)	Lap Splice Length (ft)	Number of Sides	Top Diameter (in)	Bottom Diameter (in)	Wall Thickness (in)	Tapered Pole Grade	Weight Multiplier
1	150 - 145	5		12	15.000	15.732	0.21875	A572-50	1.000
2	145 - 140	5		12	15.732	16.463	0.21875	A572-50	1.000
3	140 - 135	5		12	16.463	17.195	0.21875	A572-50	1.000
4	135 - 130	5		12	17.195	17.927	0.21875	A572-50	1.000
5	130 - 128.5	1.5		12	17.927	18.146	0.21875	A572-50	1.000
6	128.5 - 128.25	0.25		12	18.146	18.183	0.66875	A572-50	0.867
7	128.25 - 123.25	5		12	18.183	18.915	0.64375	A572-50	0.877
8	123.25 - 118.25	5		12	18.915	19.646	0.61875	A572-50	0.889
9	118.25 - 113.25	5		12	19.646	20.378	0.60625	A572-50	0.887
10	113.25 - 109	4.25	0	12	20.378	21.000	0.59375	A572-50	0.889
11	109 - 108.75	0.25		12	21.000	21.038	0.725	A572-50	0.881
12	108.75 - 104.17	4.58		12	21.038	21.729	0.7	A572-50	0.893
13	104.17 - 103.92	0.25		12	21.729	21.767	0.975	A572-50	0.971
14	103.92 - 103.17	0.75		12	21.767	21.880	0.95	A572-50	0.991
15	103.17 - 102.92	0.25		12	21.880	21.918	1.125	A572-50	0.983
16	102.92 - 102.42	0.5		12	21.918	21.994	1.1	A572-50	1.001
17	102.42 - 102.17	0.25		12	21.994	22.031	0.925	A572-50	1.079
18	102.17 - 100.92	1.25		12	22.031	22.220	0.925	A572-50	1.072
19	100.92 - 100.67	0.25		12	22.220	22.258	1	A572-50	0.994
20	100.67 - 99.58	1.09		12	22.258	22.422	1	A572-50	0.988
21	99.58 - 99.33	0.25		12	22.422	22.460	1.375	A572-50	0.843
22	99.33 - 95.25	4.08		12	22.460	23.076	1.325	A572-50	0.854
23	95.25 - 95	0.25		12	23.076	23.114	1.025	A572-50	0.829
24	95 - 90	5		12	23.114	23.869	1	A572-50	0.829
25	90 - 85	5		12	23.869	24.624	0.9625	A572-50	0.841
26	85 - 80.5	4.5		12	24.624	25.304	0.925	A572-50	0.857
27	80.5 - 80.25	0.25		12	25.304	25.341	1.3	A572-50	0.818
28	80.25 - 75.25	5		12	25.341	26.096	1.25	A572-50	0.829
29	75.25 - 73.58	1.67		12	26.096	26.348	1.225	A572-50	0.839
30	73.58 - 73.33	0.25		12	26.348	26.386	1.225	A572-50	0.838
31	73.33 - 72	4.33	3	12	26.386	27.040	1.2	A572-50	0.849
32	72 - 67	5		12	26.087	26.897	1.2625	A572-50	0.853
33	67 - 66.75	0.25		12	26.897	26.937	1.2625	A572-50	0.852
34	66.75 - 66.5	0.25		12	26.937	26.978	1.3625	A572-50	0.836
35	66.5 - 61.5	5		12	26.978	27.788	1.3125	A572-50	0.847
36	61.5 - 56.5	5		12	27.788	28.598	1.2625	A572-50	0.860
37	56.5 - 51.5	5		12	28.598	29.408	1.2375	A572-50	0.859
38	51.5 - 48.25	3.25		12	29.408	29.934	1.2125	A572-50	0.864
39	48.25 - 48	0.25		12	29.934	29.974	1.6375	A572-50	0.780
40	48 - 44.25	3.75		12	29.974	30.582	1.6125	A572-50	0.779
41	44.25 - 44	0.25		12	30.582	30.622	1.7125	A572-50	0.783
42	44 - 43.08	0.92		12	30.622	30.771	1.7125	A572-50	0.780
43	43.08 - 42.83	0.25		12	30.771	30.812	1.7125	A572-50	0.779
44	42.83 - 37.83	5		12	30.812	31.622	1.6375	A572-50	0.796
45	37.83 - 34	7.83	4	12	31.622	32.890	1.6125	A572-50	0.795
46	34 - 29	5		12	31.617	32.462	1.7063	A572-50	0.806
47	29 - 24	5		12	32.462	33.306	1.6563	A572-50	0.813
48	24 - 23.75	0.25		12	33.306	33.348	1.6563	A572-50	0.813
49	23.75 - 23.5	0.25		12	33.348	33.391	1.6563	A572-50	0.812
50	23.5 - 18.5	5		12	33.391	34.235	1.6063	A572-50	0.821
51	18.5 - 13.5	5		12	34.235	35.080	1.5563	A572-50	0.831
52	13.5 - 11	2.5		12	35.080	35.502	1.5313	A572-50	0.837
53	11 - 10.75	0.25		12	35.502	35.544	1.2313	A572-50	1.000
54	10.75 - 6	4.75		12	35.544	36.347	1.2563	A572-50	0.966
55	6 - 5.75	0.25		12	36.347	36.389	1.5313	A572-50	0.774
56	5.75 - 3.25	2.5		12	36.389	36.811	1.5063	A572-50	0.780
57	3.25 - 3	0.25		12	36.811	36.853	1.1563	A572-50	0.761
58	3 - 0	3		12	36.853	37.360	1.1313	A572-50	0.771

TNX Section Forces

Increment (ft): 5

	Section Height (ft)	TNX Output P_u (K)	M_{ux} (kip-ft)	V_u (K)
1	150 - 145	4.09	44.95	6.71
2	145 - 140	4.42	80.22	7.39
3	140 - 135	10.55	133.44	11.70
4	135 - 130	10.98	192.58	11.96
5	130 - 128.5	11.11	210.56	12.04
6	128.5 - 128.25	11.16	213.57	12.04
7	128.25 - 123.25	11.95	274.68	12.40
8	123.25 - 118.25	17.09	347.80	18.39
9	118.25 - 113.25	17.97	441.07	18.94
10	113.25 - 109	19.70	522.76	20.02
11	109 - 108.75	19.76	527.77	20.05
12	108.75 - 104.17	20.72	620.68	20.56
13	104.17 - 103.92	20.80	625.82	20.60
14	103.92 - 103.17	21.02	641.29	20.68
15	103.17 - 102.92	21.11	646.46	20.72
16	102.92 - 102.42	21.28	656.83	20.78
17	102.42 - 102.17	21.36	662.02	20.82
18	102.17 - 100.92	21.74	688.11	20.97
19	100.92 - 100.67	21.83	693.35	21.00
20	100.67 - 99.58	22.17	716.30	21.13
21	99.58 - 99.33	22.26	721.58	21.18
22	99.33 - 95.25	26.05	820.49	24.04
23	95.25 - 95	26.13	826.50	24.09
24	95 - 90	27.60	948.45	24.72
25	90 - 85	29.11	1073.57	25.35
26	85 - 80.5	30.48	1188.84	25.91
27	80.5 - 80.25	30.59	1195.32	25.94
28	80.25 - 75.25	32.50	1326.68	26.63
29	75.25 - 73.58	33.15	1371.33	26.87
30	73.58 - 73.33	33.26	1378.04	26.89
31	73.33 - 72	33.77	1413.91	27.07
32	72 - 67	36.82	1551.19	27.83
33	67 - 66.75	36.93	1558.15	27.86
34	66.75 - 66.5	37.04	1565.11	27.89
35	66.5 - 61.5	39.21	1705.97	28.48
36	61.5 - 56.5	41.42	1849.71	29.05
37	56.5 - 51.5	43.65	1996.22	29.59
38	51.5 - 48.25	45.11	2092.98	29.99
39	48.25 - 48	45.25	2100.47	30.01
40	48 - 44.25	47.22	2213.89	30.51
41	44.25 - 44	47.37	2221.52	30.53
42	44 - 43.08	47.88	2249.66	30.66
43	43.08 - 42.83	48.03	2257.32	30.68
44	42.83 - 37.83	50.83	2412.27	31.32
45	37.83 - 34	52.99	2533.02	31.77
46	34 - 29	58.06	2693.61	32.47
47	29 - 24	61.11	2857.23	33.01
48	24 - 23.75	61.27	2865.49	33.03
49	23.75 - 23.5	61.42	2873.74	33.05
50	23.5 - 18.5	64.49	3040.33	33.60
51	18.5 - 13.5	67.60	3209.56	34.13
52	13.5 - 11	69.17	3295.16	34.40
53	11 - 10.75	69.33	3303.76	34.40
54	10.75 - 6	72.25	3468.19	34.88
55	6 - 5.75	72.42	3476.91	34.87
56	5.75 - 3.25	73.91	3564.40	35.15
57	3.25 - 3	74.04	3573.18	35.15
58	3 - 0	75.47	3679.02	35.44

Analysis Results

Elevation (ft)	Component Type	Size	Critical Element	% Capacity	Pass / Fail
150 - 145	Pole	TP15.732x15x0.2188	Pole	22.6%	Pass
145 - 140	Pole	TP16.463x15.732x0.2188	Pole	36.4%	Pass
140 - 135	Pole	TP17.195x16.463x0.2188	Pole	55.9%	Pass
135 - 130	Pole	TP17.927x17.195x0.2188	Pole	73.6%	Pass
130 - 128.5	Pole	TP18.146x17.927x0.2188	Pole	78.4%	Pass
128.5 - 128.25	Pole + Reinf.	TP18.183x18.146x0.6688	Reinf. 12 Tension Rupture	39.5%	Pass
128.25 - 123.25	Pole + Reinf.	TP18.915x18.183x0.6438	Reinf. 12 Tension Rupture	48.0%	Pass
123.25 - 118.25	Pole + Reinf.	TP19.646x18.915x0.6188	Reinf. 12 Tension Rupture	57.9%	Pass
118.25 - 113.25	Pole + Reinf.	TP20.378x19.646x0.6063	Reinf. 12 Tension Rupture	69.7%	Pass
113.25 - 109	Pole + Reinf.	TP21x20.378x0.5938	Reinf. 12 Tension Rupture	79.3%	Pass
109 - 108.75	Pole + Reinf.	TP21.038x21x0.725	Reinf. 7 Tension Rupture	60.5%	Pass
108.75 - 104.17	Pole + Reinf.	TP21.729x21.038x0.7	Reinf. 7 Tension Rupture	68.1%	Pass
104.17 - 103.92	Pole + Reinf.	TP21.767x21.729x0.975	Reinf. 7 Tension Rupture	61.0%	Pass
103.92 - 103.17	Pole + Reinf.	TP21.88x21.767x0.95	Reinf. 7 Tension Rupture	62.1%	Pass
103.17 - 102.92	Pole + Reinf.	TP21.918x21.88x1.125	Reinf. 7 Tension Rupture	50.6%	Pass
102.92 - 102.42	Pole + Reinf.	TP21.994x21.918x1.1	Reinf. 7 Tension Rupture	51.2%	Pass
102.42 - 102.17	Pole + Reinf.	TP22.031x21.994x0.925	Reinf. 7 Tension Rupture	56.4%	Pass
102.17 - 100.92	Pole + Reinf.	TP22.22x22.031x0.925	Reinf. 7 Tension Rupture	57.9%	Pass
100.92 - 100.67	Pole + Reinf.	TP22.258x22.22x1	Reinf. 7 Tension Rupture	56.7%	Pass
100.67 - 99.58	Pole + Reinf.	TP22.422x22.258x1	Reinf. 7 Tension Rupture	58.0%	Pass
99.58 - 99.33	Pole + Reinf.	TP22.46x22.422x1.375	Reinf. 17 Tension Rupture	41.6%	Pass
99.33 - 95.25	Pole + Reinf.	TP23.076x22.46x1.325	Reinf. 17 Tension Rupture	45.9%	Pass
95.25 - 95	Pole + Reinf.	TP23.114x23.076x1.025	Reinf. 18 Tension Rupture	56.7%	Pass
95 - 90	Pole + Reinf.	TP23.869x23.114x1	Reinf. 18 Tension Rupture	62.5%	Pass
90 - 85	Pole + Reinf.	TP24.624x23.869x0.9625	Reinf. 18 Tension Rupture	68.1%	Pass
85 - 80.5	Pole + Reinf.	TP25.304x24.624x0.925	Reinf. 18 Tension Rupture	72.9%	Pass
80.5 - 80.25	Pole + Reinf.	TP25.341x25.304x1.3	Reinf. 6 Tension Rupture	60.4%	Pass
80.25 - 75.25	Pole + Reinf.	TP26.096x25.341x1.25	Reinf. 6 Tension Rupture	64.8%	Pass
75.25 - 73.58	Pole + Reinf.	TP26.348x26.096x1.225	Reinf. 6 Tension Rupture	66.2%	Pass
73.58 - 73.33	Pole + Reinf.	TP26.386x26.348x1.225	Reinf. 6 Tension Rupture	66.4%	Pass
73.33 - 72	Pole + Reinf.	TP27.04x26.386x1.2	Reinf. 6 Tension Rupture	67.5%	Pass
72 - 67	Pole + Reinf.	TP26.897x26.087x1.2625	Reinf. 6 Tension Rupture	69.2%	Pass
67 - 66.75	Pole + Reinf.	TP26.937x26.897x1.2625	Reinf. 6 Tension Rupture	69.4%	Pass
66.75 - 66.5	Pole + Reinf.	TP26.978x26.937x1.3625	Reinf. 5 Tension Rupture	60.4%	Pass
66.5 - 61.5	Pole + Reinf.	TP27.788x26.978x1.3125	Reinf. 5 Tension Rupture	63.5%	Pass
61.5 - 56.5	Pole + Reinf.	TP28.598x27.788x1.2625	Reinf. 5 Tension Rupture	66.4%	Pass
56.5 - 51.5	Pole + Reinf.	TP29.408x28.598x1.2375	Reinf. 5 Tension Rupture	69.3%	Pass
51.5 - 48.25	Pole + Reinf.	TP29.934x29.408x1.2125	Reinf. 5 Tension Rupture	71.1%	Pass
48.25 - 48	Pole + Reinf.	TP29.974x29.934x1.6375	Reinf. 2 Connection	62.4%	Pass
48 - 44.25	Pole + Reinf.	TP30.582x29.974x1.6125	Reinf. 2 Compression	64.1%	Pass
44.25 - 44	Pole + Reinf.	TP30.622x30.582x1.7125	Reinf. 2 Compression	60.6%	Pass
44 - 43.08	Pole + Reinf.	TP30.771x30.622x1.7125	Reinf. 2 Compression	60.9%	Pass
43.08 - 42.83	Pole + Reinf.	TP30.812x30.771x1.7125	Reinf. 2 Compression	61.0%	Pass
42.83 - 37.83	Pole + Reinf.	TP31.622x30.812x1.6375	Reinf. 2 Compression	63.1%	Pass
37.83 - 34	Pole + Reinf.	TP32.89x31.622x1.6125	Reinf. 2 Compression	64.7%	Pass
34 - 29	Pole + Reinf.	TP32.462x31.617x1.7063	Reinf. 2 Compression	64.1%	Pass
29 - 24	Pole + Reinf.	TP33.306x32.462x1.6563	Reinf. 2 Compression	65.7%	Pass
24 - 23.75	Pole + Reinf.	TP33.348x33.306x1.6563	Reinf. 2 Compression	65.8%	Pass
23.75 - 23.5	Pole + Reinf.	TP33.391x33.348x1.6563	Reinf. 2 Compression	65.9%	Pass
23.5 - 18.5	Pole + Reinf.	TP34.235x33.391x1.6063	Reinf. 2 Compression	67.4%	Pass
18.5 - 13.5	Pole + Reinf.	TP35.08x34.235x1.5563	Reinf. 2 Compression	68.9%	Pass
13.5 - 11	Pole + Reinf.	TP35.502x35.08x1.5313	Reinf. 2 Connection	69.6%	Pass
11 - 10.75	Pole + Reinf.	TP35.544x35.502x1.2313	Reinf. 3 Tension Rupture	66.2%	Pass
10.75 - 6	Pole + Reinf.	TP36.347x35.544x1.2563	Reinf. 3 Tension Rupture	67.6%	Pass
6 - 5.75	Pole + Reinf.	TP36.389x36.347x1.5313	Reinf. 3 Tension Rupture	58.4%	Pass
5.75 - 3.25	Pole + Reinf.	TP36.811x36.389x1.5063	Reinf. 3 Tension Rupture	59.1%	Pass
3.25 - 3	Pole + Reinf.	TP36.853x36.811x1.1563	Reinf. 20 Compression	74.6%	Pass
3 - 0	Pole + Reinf.	TP37.36x36.853x1.1313	Reinf. 20 Compression	75.4%	Pass
				Summary	
			Pole	78.4%	Pass
			Reinforcement	79.3%	Pass
			Overall	79.3%	Pass

Additional Calculations

Section Elevation (ft)	Moment of Inertia (in^4)			Area (in^2)			% Capacity*																					
	Pole	Reinf.	Total	Pole	Reinf.	Total	Pole	R1	R2	R3	R4	R5	R6	R7	R8	R9	R10	R11	R12	R13	R14	R15	R16	R17	R18	R19	R20	R21
150 - 145	336	n/a	336	10.91	n/a	10.91	22.6%																					
145 - 140	386	n/a	386	11.43	n/a	11.43	36.4%																					
140 - 135	440	n/a	440	11.94	n/a	11.94	55.9%																					
135 - 130	500	n/a	500	12.46	n/a	12.46	73.6%																					
130 - 128.5	519	n/a	519	12.61	n/a	12.61	78.4%																					
128.5 - 128.25	522	959	1481	12.64	20.00	32.64	27.1%												39.5%									
128.25 - 123.25	588	1031	1619	13.15	20.00	33.15	33.0%												48.0%									
123.25 - 118.25	660	1106	1766	13.66	20.00	33.66	39.9%												57.9%									
118.25 - 113.25	738	1184	1922	14.18	20.00	34.18	48.1%												69.7%									
113.25 - 109	808	1252	2060	14.62	20.00	34.62	55.1%												79.3%									
109 - 108.75	924	1580	2504	16.71	25.00	41.71	45.6%							60.5%			60.5%	60.5%										
108.75 - 104.17	1020	1678	2697	17.27	25.00	42.27	51.3%							68.1%			68.1%	68.1%										
104.17 - 103.92	1155	2583	3738	17.30	46.00	63.30	47.3%							61.0%			49.3%	37.9%						39.3%				
103.92 - 103.17	1173	2608	3781	17.39	46.00	63.39	48.1%							62.1%			50.2%	38.6%						40.1%				
103.17 - 102.92	1093	3108	4201	17.42	56.50	73.92	40.8%							50.6%			33.9%	38.1%						40.6%		34.4%		
102.92 - 102.42	1105	3127	4232	17.48	56.50	73.98	41.2%							51.2%			34.3%	38.6%						41.1%		34.8%		
102.42 - 102.17	1073	2543	3617	17.51	50.25	67.76	45.4%							56.4%			35.4%							50.9%		35.9%		
102.17 - 100.92	1101	2583	3684	17.66	50.25	67.91	46.7%							58.0%			36.4%							52.3%		37.0%		
100.92 - 100.67	1122	2888	4010	17.69	50.25	67.94	44.7%							56.7%	41.1%									46.2%		41.3%		
100.67 - 99.58	1147	2927	4074	17.82	50.25	68.07	45.8%							58.0%	42.1%									47.3%		42.2%		
99.58 - 99.33	1128	4186	5314	17.85	60.75	78.60	32.8%							39.4%	37.3%									41.6%	36.6%	40.4%		
99.33 - 95.25	1225	4398	5622	18.35	60.75	79.10	36.2%							43.4%	41.2%									45.9%	40.4%	44.6%		
95.25 - 95	1230	3354	4583	18.38	42.00	60.38	42.8%																	56.7%	56.7%	56.7%		
95 - 90	1356	3555	4911	18.99	42.00	60.99	47.5%																	62.5%	62.5%	62.5%		
90 - 85	1490	3763	5253	19.59	42.00	61.59	52.3%																	68.1%	68.1%	68.1%		
85 - 80.5	1618	3955	5573	20.14	42.00	62.14	56.5%																	72.9%	72.9%	72.9%		
80.5 - 80.25	1625	5748	7373	20.17	62.00	82.17	43.1%						60.4%											55.5%	55.5%	55.5%		
80.25 - 75.25	1776	6069	7845	20.78	62.00	82.78	46.7%						64.8%											59.4%	59.4%	59.4%		
75.25 - 73.58	1829	6178	8007	20.98	62.00	82.98	47.9%						66.2%											60.7%	60.7%	60.7%		
73.58 - 73.33	1837	6195	8032	21.01	62.00	83.01	48.1%						66.4%										60.9%					
73.33 - 72	1880	6282	8162	21.17	62.00	83.17	49.0%						67.5%										61.9%					
72 - 67	2416	6419	8836	26.71	62.00	88.71	48.3%						69.2%										63.5%					
67 - 66.75	2427	6437	8865	26.75	62.00	88.75	48.5%						69.4%										63.6%					
66.75 - 66.5	2439	6966	9405	26.79	67.00	93.79	46.0%					60.4%											60.3%					
66.5 - 61.5	2668	7360	10028	27.61	67.00	94.61	48.4%					63.5%											63.4%					
61.5 - 56.5	2910	7766	10676	28.42	67.00	95.42	50.7%					66.4%											66.3%					
56.5 - 51.5	3168	8182	11350	29.23	67.00	96.23	52.9%					69.3%											69.1%					
51.5 - 48.25	3343	8458	11801	29.76	67.00	96.76	54.6%					71.1%											70.9%					
48.25 - 48	3356	12004	15360	29.80	86.63	116.44	42.3%		62.4%			54.9%											54.8%					
48 - 44.25	3567	12443	16010	30.41	86.63	117.05	43.9%		64.1%			56.6%											56.4%					
44.25 - 44	3581	13457	17038	30.46	94.13	124.59	41.4%		60.6%		49.7%												53.3%					
44 - 43.08	3634	13574	17209	30.61	94.13	124.74	41.8%		60.9%		50.1%												53.7%					
43.08 - 42.83	3649	13607	17255	30.65	94.13	124.78	41.9%		61.0%		50.2%									53.8%	53.8%	53.8%						
42.83 - 37.83	3947	14258	18205	31.46	94.13	125.59	43.9%		63.1%		52.1%									55.8%	55.8%	55.8%						
37.83 - 34	4187	14767	18953	32.08	94.13	126.22	45.5%		64.7%		53.5%									57.4%	57.4%	57.4%						
34 - 29	5508	14949	20457	41.88	94.13	136.01	43.8%		64.1%		53.1%									56.9%	56.9%	56.9%						
29 - 24	5955	15661	21616	42.98	94.13	137.12	45.2%		65.7%		54.7%									58.5%	58.5%	58.5%						
24 - 23.75	5978	15697	21675	43.04	94.13	137.17	45.2%		65.8%		54.7%									58.6%	58.6%	58.6%						
23.75 - 23.5	6001	15733	21734	43.09	94.13	137.23	45.3%		65.9%	54.8%										58.7%	58.7%	58.7%						
23.5 - 18.5	6474	16464	22937	44.19	94.13	138.33	46.6%		67.4%	56.3%										60.2%	60.2%	60.2%						
18.5 - 13.5	6971	17211	24182	45.30	94.13	139.43	47.8%		68.9%	57.7%										61.7%	61.7%	61.7%						
13.5 - 11	7228	17591	24819	45.85	94.13	139.98	48.4%		69.6%	58.4%										62.5%	62.5%	62.5%						
11 - 10.75	7255	13339	20593	45.90	90.01	135.91	60.1%	52.5%		66.2%										57.7%		57.7%						52.4%
10.75 - 6	7763	14489	22251	46.95	90.01	136.96	59.9%	53.4%		67.6%										58.9%		58.9%						53.5%
6 - 5.75	7790	19023	26813	47.01	85.88	132.89	48.4%	41.9%		58.4%																	57.8%	57.8%
5.75 - 3.25	8068	19409	27477	47.56	85.88	133.44	49.0%	42.3%		59.1%																	58.4%	58.4%
3.25 - 3	8096	13491	21587	47.61	53.38	101.00	64.7%	54.1%																			74.6%	74.6%
3 - 0	8438	13803	22241	48.28	53.38	101.66	65.6%	54.6%																			75.4%	75.4%

Note: Section capacity checked in 5 degree increments.
Rating per TIA-222-H Section 15.5.

PAUL J. FORD & COMPANY
250 E Broad St, Ste 600 • Columbus, OH 43215
Phone 614.221.6679 www.pauljford.com

v2.1, Effective Date: 05-03-17

Date:	6/22/2020
Project No:	37520-1130,001,7805
Site Name:	Bridgeport North
Site Number/BUN:	841288
Description:	150' Monopole
Owner:	CCI
Engineer:	JGF
Order #	494425 Rev. 1

Welded Bridge Stiffener Analysis

General Parameters and Loading:

Flange Elevation:	109.00	ft
Method:	LRFD	
ASD Stress Increase, ASIF:	N/A	
Moment, Muf:	522.8	k-ft
Axial, Puf:	19.7	kips
Shear, Vf:	20.0	kips

Pole Parameters:

	Upper Pole	Lower Pole	
Pole Diameter, Dp:	21.00	21.00	in
Pole Thickness, tp:	0.2188	0.2500	in
Pole Fy:	50	50	ksi
Pole Fu:	65	65	ksi
Flange Diameter, Df:	28.50	28.50	in

Bridge Stiffener Parameters:

	Stiffener Type 1	Stiffener Type 2	
Qty. Stiffeners:	4	0	
Upper Weld Length, L1:	30.00	0.00	in
Lower Weld Length, L2:	30.00	0.00	in
Weld Size, w:	0.3750	0.0000	in
Electrode:	E70	E70	
Effective Stiffener Width, Ws:	4.00	0.00	in
Stiffener Thickness, ts:	1.25	0.00	in
Notch, n:	2.25	0.00	in
Stiffener Fy:	65	0	ksi
Stiffener Fu:	80	0	ksi
Unbraced Length, L:	15.00	0.00	in
K:	0.80	0.00	
Stiffener Spacing:	Symmetric	Symmetric	
Start Angle, for Symmetric:	0	0	degrees
Stiffener Circle:	37.00	28.50	in = Df + 2 n + Ws
Upper Eccentricity, e1:	8.00	3.75	in = (Df - Dp) / 2 + n + Ws / 2
Lower Eccentricity, e2:	8.00	3.75	in = (Df - Dp) / 2 + n + Ws / 2

Flange Bolt Parameters:

Number of Bolt Circles:	(1) Bolt Circle	

	Bolt Circle 1	Bolt Circle 2	
Qty. Bolts:	0	0	
Bolt Diameter:	1.00	0.00	in
Bolt Circle:	26.00	0.00	in
Bolt Spacing:	Symmetric	Symmetric	
Start Angle, for Symmetric:	0	0	degrees
Bolt Area, Ag:	0.0000	0.0000	in
Max. Tension:	0.00	0.00	kips
Max. Net Tension:	0.00	0.00	kips
Max. Net Compression:	0.00	0.00	kips
Moment to Bolt Circle:	0.00	0.00	k-ft
Axial to Bolt Circle:	0.00	0.00	kips
Shear to Bolt Circle:	0.00	0.00	kips
Equivalent Bolt Circle:	0.00	0.00	in

Weld Analysis per AISC Tables 8-4 & 8-3:

Upper Pole	Stiffener Type 1	Stiffener Type 2	
D:	6	0	Num. of Sixteenths in Weld
a:	0.2667	0.0000	= e1 / L1
k:	0	0	
C:	3.2367	3.7100	Tabulated Cofficient
C1:	1.0000	1.0000	Coefficient for Electrode
Φ:	0.7500	0.7500	
Stiffener Axial, Pu:	174.7	0.0	kips
Axial Capacity, ΦPn:	437.0	0.0	kips = Φ C C1 D L
Ratio:	40.0%	0.0%	
Lower Pole			
D:	6	0	Num. of Sixteenths in Weld
a:	0.2667	0.0000	= e2 / L2
k:	0	0	
C:	3.2367	3.7100	Tabulated Cofficient
C1:	1.0000	1.0000	Coefficient for Electrode
Φ:	0.7500	0.7500	
Stiffener Axial, Pu:	174.7	0.0	kips
Axial Capacity, ΦPn:	437.0	0.0	kips = Φ C C1 D L
Ratio:	40.0%	0.0%	

Pole Analysis per AISC Table J2.5 & Sect. J4.2:

Upper Pole	Stiffener Type 1	Stiffener Type 2	
Stiffener Axial, Pu:	174.7	0.0	kips
Effective Throat, te:	0.2651	0.0000	in = 0.707 w
Shear Stress, fuv:	2.9	0.0	kips/in= Pu / (2 L1)
Section Modulus, S:	300.0	0.0	$in^2 = L1^2 / 3$
Bending Stress, fub:	4.7	0.0	kips/in = Pu e1 / S
Combined Stress, fu:	5.5	0.0	kips/in = $(fuv^2 + fub^2)^{1/2}$
Φ:	0.7500	0.0000	
Stress Capacity, ΦFn	6.4	0.0	kips/in = Φ 0.6 Fu tp
Ratio:	85.8%	0.0%	
Lower Pole			
Stiffener Axial, Pu:	174.7	0.0	kips
Effective Throat, te:	0.2651	0.0000	in = 0.707 w
Shear Stress, fuv:	2.9	0.0	ksi = Pu / (2 L2)
Section Modulus, S:	300.0	0.0	$in^2 = L2^2 / 3$
Bending Stress, fub:	4.7	0.0	ksi = Pu e2 / S
Combined Stress, fu:	5.5	0.0	kips/in = $(fuv^2 + fub^2)^{1/2}$
Φ:	0.7500	0.0000	
Stress Capacity, ΦFn	7.3	0.0	kips/in = Φ 0.6 Fu tp
Ratio:	75.1%	0.0%	

Stiffener 1 Analysis per AISC Sect. D2, E3 & E7

	Stiffener Type 1	
Gross Area, Ag:	5.0000	in^2
Effective Net Area, Aen:	5.0000	in^2 = Ag U, where U = 1.000
Stiffener Axial, Pu:	174.7	kips
Stiffener Stress, fu:	34.9	ksi = Pu / Ag
b:	10.0000	in = (Df - Dp) / 2 + n + Ws, Upper Pole
b / ts:	8.0000	in
Q, Where Qa = 1.0:	1.0000	
r:	0.3608	in^3
K L / r:	33.2554	
Φ:	0.9000	
Axial Capacity, ΦFcr:	52.66	ksi = Φ $[0.658^{Fy/Fe}]$ Fy
Φ:	0.9000	
Ten. Yielding Cap., ΦFnt:	58.50	ksi = Φ Fy
Φ:	0.7500	
Ten. Rupture Cap., ΦFnr:	60.00	ksi = Φ Fu (Aen / Ag)
Ratio:	66.3%	

Stiffener 2 Analysis per AISC Sect. D2, E3 & E7

	Stiffener Type 2	
Gross Area, Ag:	0.0000	in^2
Effective Net Area, Aen:	0.0000	in^2 = Ag U, where U = 1.000
Stiffener Axial, Pu:	0.0	kips
Stiffener Stress, fu:	0.0	ksi = Pu / Ag
b:	0.0000	in = (Df - Dp) / 2 + n + Ws, Upper Pole
b / ts:	0.0000	in
Q, Where Qa = 1.0:	0.0000	
r:	0.0000	in^3
K L / r:	0.0000	
Φ:	0.0000	
Axial Capacity, ΦFcr:	0.00	ksi = Φ Fy
Φ:	0.0000	
Ten. Yielding Cap., ΦFnt:	0.00	ksi = Φ Fy
Φ:	0.0000	
Ten. Rupture Cap., ΦFnr:		ksi = Φ Fu (Aen / Ag)
Ratio:	0.0%	

Analysis Summary:

Bridge Stiffener Type 1	Bridge Stiffener Type 2
Weld Analysis Ratio: 38.1% PASS	Weld Analysis Ratio: 0.0% PASS
Pole Analysis Ratio: 81.7% PASS	Pole Analysis Ratio: 0.0% PASS
Stiffener Analysis Ratio: 63.1% PASS	Stiffener Analysis Ratio: 0.0% PASS

*Structural rating per TIA-222-H Section 15.5

© Copyright 2012, Paul J. Ford and Company, all right reserved.

Monopole Base Plate Connection

Site Info	
BU #	841288
Site Name	BRIDGEPORT NORTH
Order #	494425 Rev. 1

Analysis Considerations	
TIA-222 Revision	H
Grout Considered:	No
l_{ar} (in)	2.75

Applied Loads	
Moment (kip-ft)	3679.02
Axial Force (kips)	75.47
Shear Force (kips)	35.44

**TIA-222-H Section 15.5 Applied*

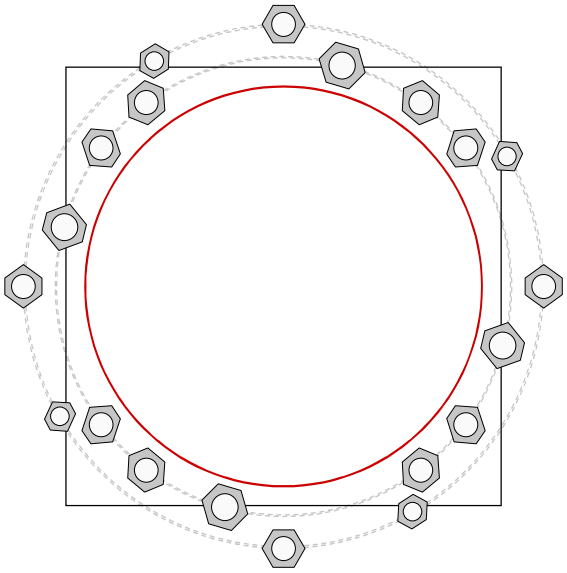

Connection Properties

Anchor Rod Data

GROUP 1: (8) 2-1/4" ø bolts (A615-75 N; Fy=75 ksi, Fu=100 ksi) on 43" BC
Anchor Spacing: 6 in
GROUP 2: (4) 2-1/2" ø bolts (WILLIAMS N; Fy=120 ksi, Fu=125 ksi) on 42.74" BC
GROUP 3: (4) 2-1/4" ø bolts (A193 Gr. B7 N; Fy=105 ksi, Fu=125 ksi) on 49" BC
GROUP 4: (4) 1-3/4" ø bolts (A193 Gr. B7 N; Fy=105 ksi, Fu=125 ksi) on 48.63" BC

Base Plate Data

41" OD x 2.75" Plate (A572-50; Fy=50 ksi, Fu=65 ksi)

Stiffener Data

N/A

Pole Data

37.36" x 0.4063" 12-sided pole (A572-50; Fy=50 ksi, Fu=65 ksi)

Analysis Results

Anchor Rod Summary *(units of kips, kip-in)*

GROUP 1:		
Pu_c = 191.67	ϕPn_c = 268.39	**Stress Rating**
Vu = 4.43	ϕVn = 120.77	**74.0%**
Mu = 7.92	ϕMn = 128.14	**Pass**
GROUP 2:		
Pu_c = 289.43	ϕPn_c = 464.75	**Stress Rating**
Vu = 0	ϕVn = 252.23	**59.3%**
Mu = 0	ϕMn = 305.77	**Pass**
GROUP 3:		
Pu_c = 207.79	ϕPn_c = 375.74	**Stress Rating**
Vu = 0	ϕVn = 169.08	**52.7%**
Mu = 0	ϕMn = 179.4	**Pass**
GROUP 4:		
Pu_c = 120.56	ϕPn_c = 198.89	**Stress Rating**
Vu = 0	ϕVn = 102.28	**57.7%**
Mu = 0	ϕMn = 84.41	**Pass**

Base Plate Summary

Max Stress (ksi):	25.43	(Flexural)
Allowable Stress (ksi):	45	
Stress Rating:	**53.8%**	**Pass**

PAUL J. FORD & COMPANY

Date:	6/22/2020	Page:	1 of 2
Job Number:	37520-1130.001.7805		
Engineer:	JGF		
Site Number:	841288		
Site Name:	Bridgeport North		
Version:	2.6	Effective:	3/11/2019

Flexible Foundation Analysis

Applied Reactions for RISA-3D

TNX Moment =	3679.02	k-ft
TNX Axial =	75.47	kips
TNX Shear =	35.44	kips
Total Unfactored Axial =	62.9	kips
TIA Standard =	H	

Passive Pressure on Pad/Mat

Horiz Subgr Modulus =	25	kcf
Plate Width =	0.5	ft
Depth to Ignore =	3.333	ft
Pad Thickness =	6.8	ft
k (side) =	2.81	k/in
k (corner) =	1.41	k/in

Pad/Mat & Pier Input

Pier Number Sides =	4	
Pier Width/Diameter =	5	ft
Pier Height =	0	ft
Ht Above Grade =	0.8	ft (Pier or Pad)
Pad Thickness =	6.8333	ft
Pad Width =	20	ft
Pad Length =	18	ft
Concrete Density =	150	pcf
Concrete f'c =	3	ksi
β1 =	0.85	
Rebar Fy =	60	ksi

Location =	Width	Length	
Top Bar Quantity =	11	11	
Top Bar Size #	10	10	
Top Clear Cover =	3	3	in
Bottom Bar Quantity =	11	11	
Bottom Bar Size #	10	10	
Bottom Clear Cover =	3	3	in
As, min =	35.42	31.88	in^2
Use Comp Side Rebar?	No	No	
Mu (Comp Top) =	2143	1352	k-ft
Mu (Comp Bot) =	2143	1352	k-ft

Pad/Mat Analysis

Location	Comp Side	c, in	d, in	εt, in/in	Mu, k-ft	Φ	ΦMn, k-ft	Ratio
Width	Top	1.61	77.09	-0.141	2143.0	0.90	4803.5	42.5%
Width	Bot	1.61	77.09	-0.141	2143.0	0.90	4803.5	42.5%
Length	Top	1.79	77.09	-0.126	1352.0	0.90	4798.7	26.8%
Length	Bot	1.79	77.09	-0.126	1352.0	0.90	4798.7	26.8%

Soil Weight

Soil Unit Weight=	[redacted]	pcf
Apply Soil Weight =	[redacted]	
Volume =	[redacted]	ft^3
Weight =	[redacted]	kips
Weight per Sq Ft =	[redacted]	ksf

Soil Modulus by Layer

Layer	Start, ft	End, ft	Vert, pci	Horiz, pci
1	0.0			
2				
3				
4				
5				
6				
7				
8				
9				

Rock Anchor Capacity

Anchor Type =	Rock Anchor	
Pile Type =	1.75" WILLIAMS R71	
Ag =	2.66	in^2
Ag Override =		in^2
E =	29000	ksi
Lu =	21.83333	ft
k = An (E) / Lu =	294.8	k/in
Pu =	390.0	ksi
Capacity = 0.8 (Pu) =	312.0	kips
Capacity Override =		kips
Max Tension from RISA =	19.3	kips
Ratio =	**5.9%**	**OK**

Bearing Check

Max Bearing Load =	2.901	kip
Plate Width =	0.5	ft
Plate Length =	0.5	ft
Design Brg Capacity =	22.5	ksf = Φqn
Bearing Pressure =	11.6	ksf
Ratio =	**65.5%**	**OK**

Subgrade Modulus Conversion

Subgrade Modulus =	3000	pci
ks =	5184.0	kcf

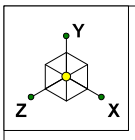

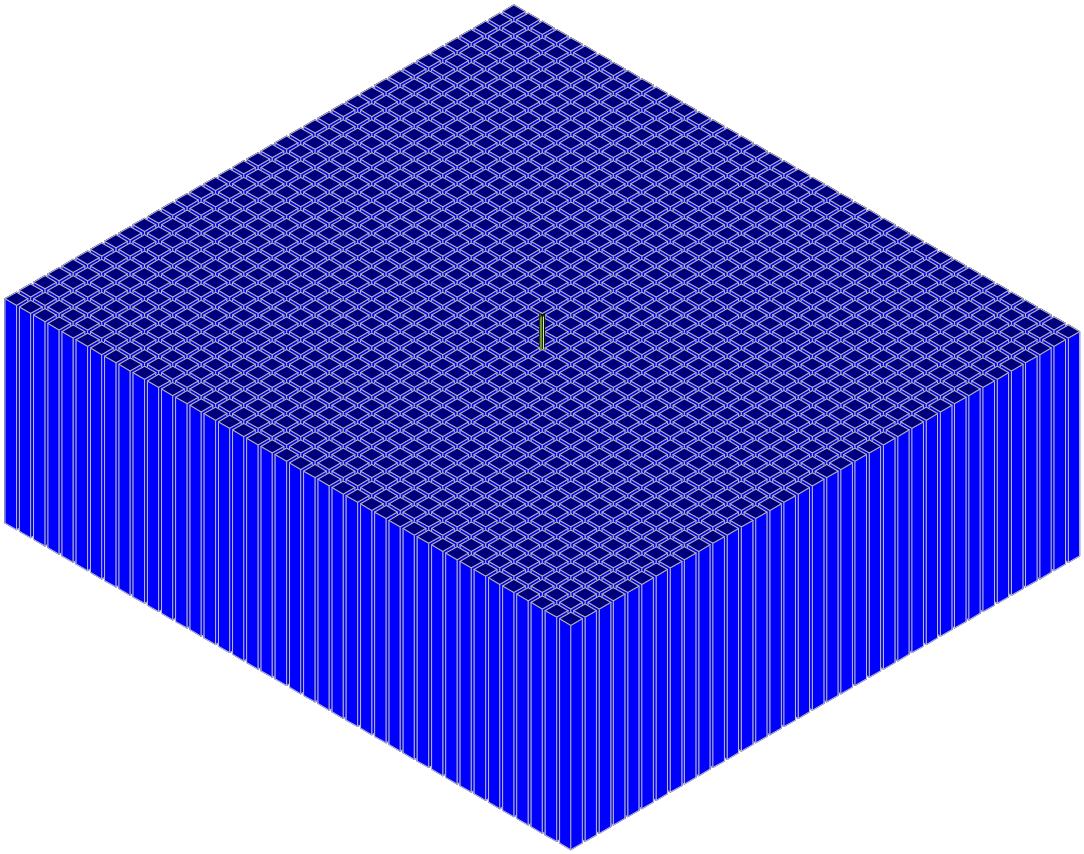

Paul J. Ford and Company	BU 841288 / Bridgeport North	SK - 1
JGF		June 22, 2020 at 11:50 AM
37520-1130.001.7805		37520-1130.001.7805 Composite ...

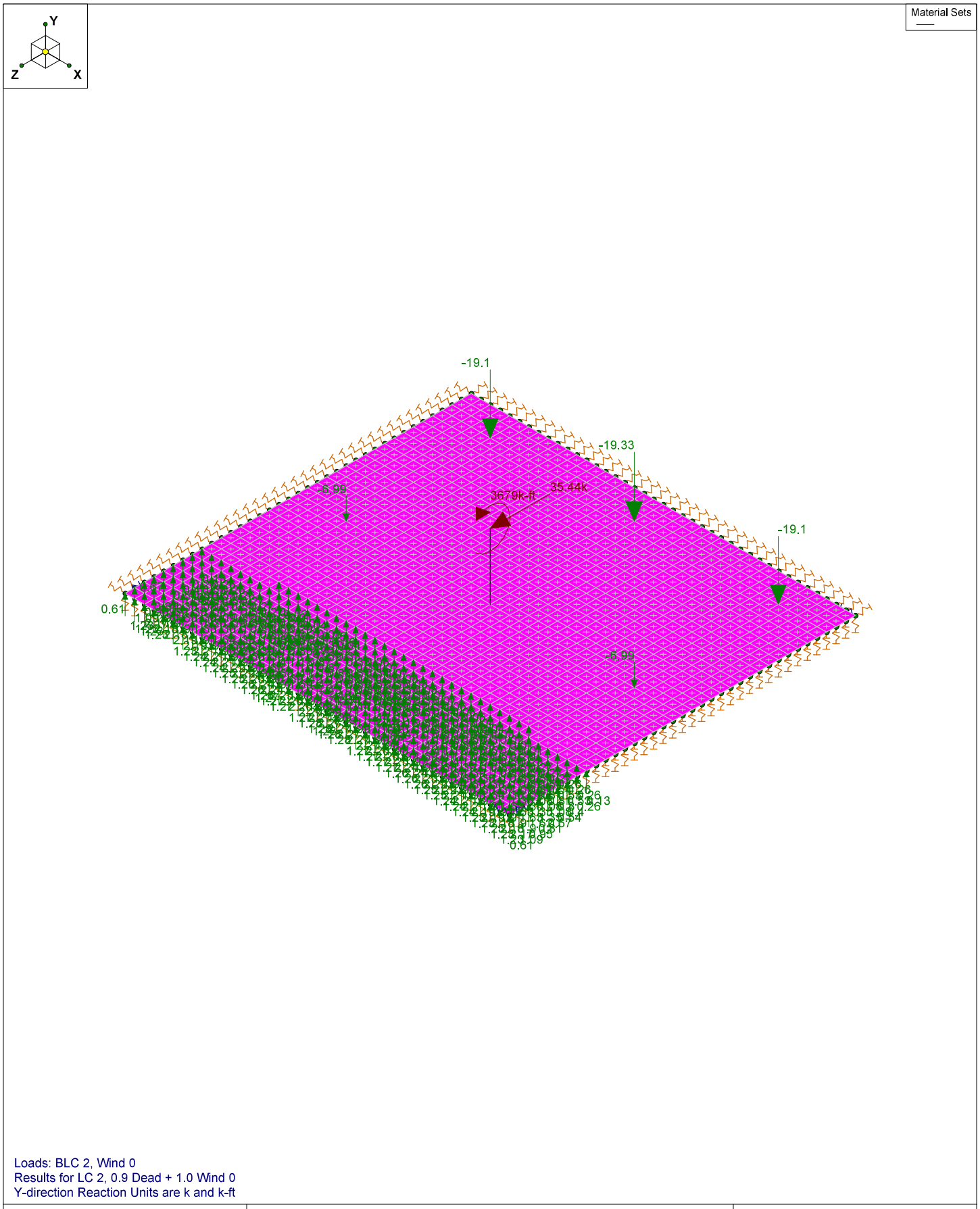

Loads: BLC 2, Wind 0
Results for LC 2, 0.9 Dead + 1.0 Wind 0
Y-direction Reaction Units are k and k-ft

Paul J. Ford and Company	BU 841288 / Bridgeport North	SK - 2
JGF		June 22, 2020 at 11:42 AM
37520-1130.001.7805		37520-1130.001.7805 Composite ...

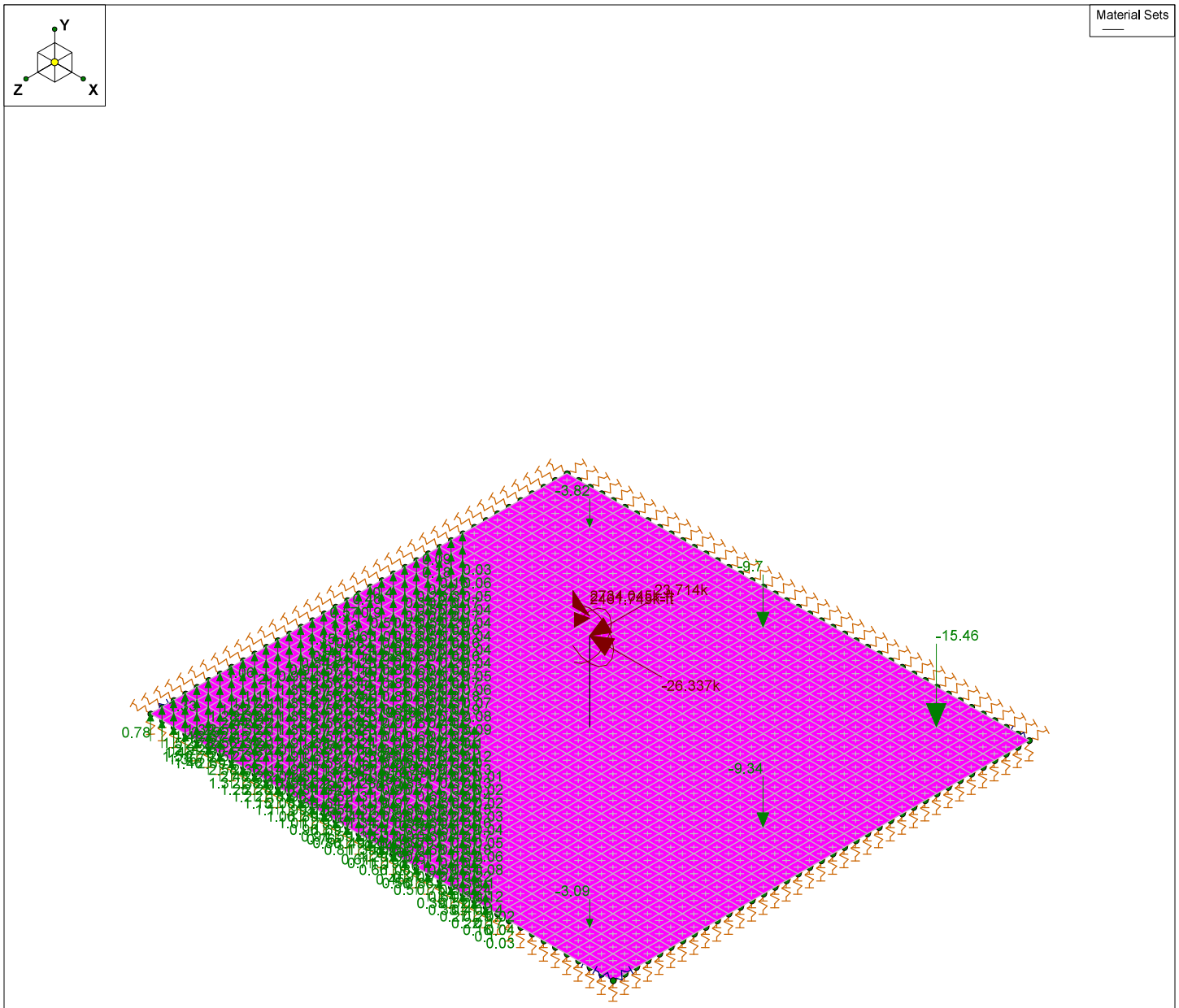

Loads: BLC 3, WIND 48
Results for LC 4, 0.9 Dead + 1.0 Wind 48
Y-direction Reaction Units are k and k-ft

Paul J. Ford and Company	BU 841288 / Bridgeport North	SK - 3
JGF		June 22, 2020 at 11:47 AM
37520-1130.001.7805		37520-1130.001.7805 Composite ...

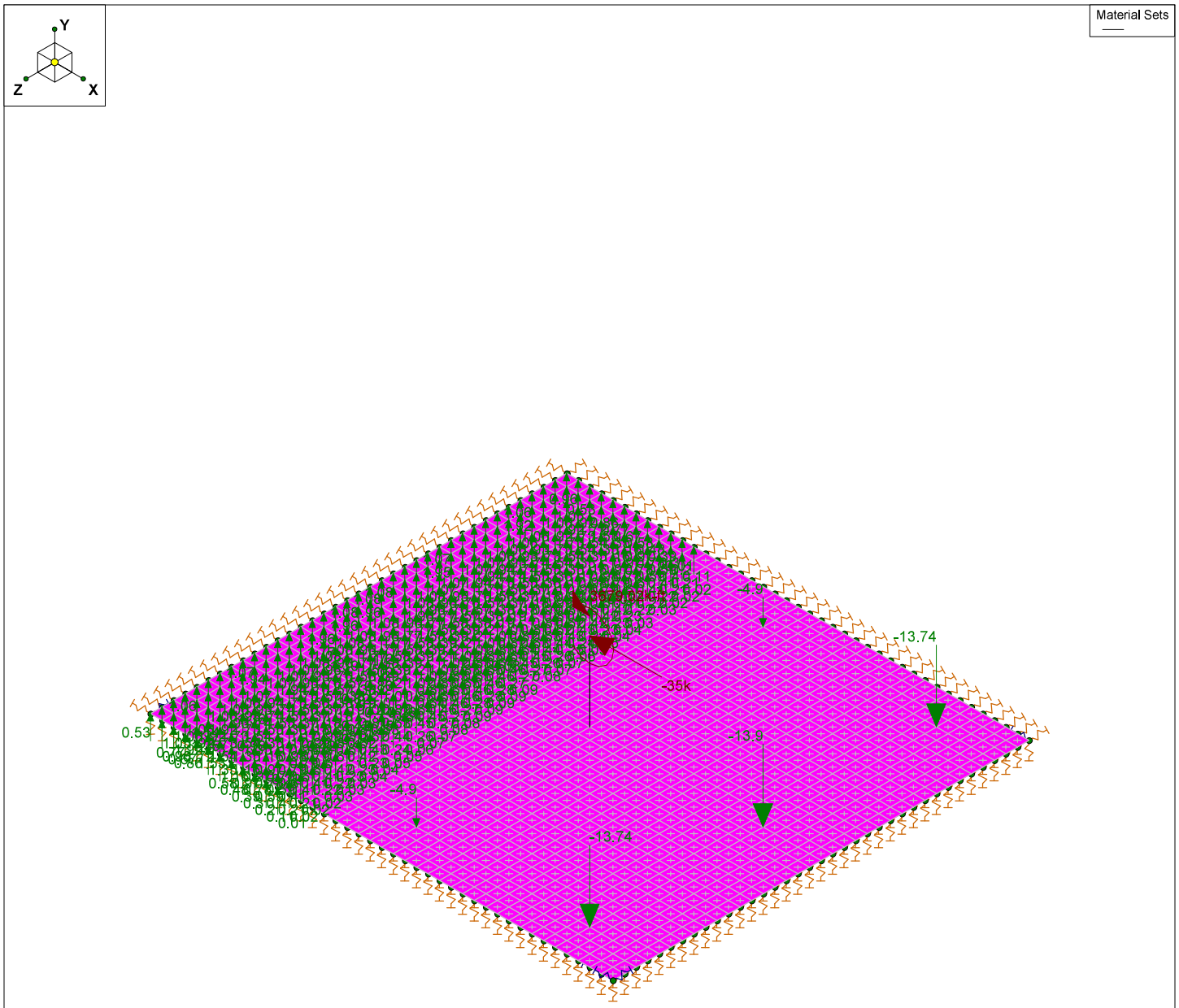

Loads: BLC 4, Wind 90
Results for LC 6, 0.9 Dead + 1.0 Wind 90
Y-direction Reaction Units are k and k-ft

Paul J. Ford and Company	BU 841288 / Bridgeport North	SK - 4
JGF		June 22, 2020 at 11:48 AM
37520-1130.001.7805		37520-1130.001.7805 Composite ...

(Global) Model Settings

Display Sections for Member Calcs	5
Max Internal Sections for Member Calcs	97
Include Shear Deformation?	Yes
Increase Nailing Capacity for Wind?	Yes
Include Warping?	Yes
Trans Load Btwn Intersecting Wood Wall?	Yes
Area Load Mesh (in^2)	144
Merge Tolerance (in)	.12
P-Delta Analysis Tolerance	0.50%
Include P-Delta for Walls?	Yes
Automatically Iterate Stiffness for Walls?	Yes
Max Iterations for Wall Stiffness	3
Gravity Acceleration (ft/sec^2)	32.2
Wall Mesh Size (in)	12
Eigensolution Convergence Tol. (1.E-)	4
Vertical Axis	Y
Global Member Orientation Plane	XZ
Static Solver	Sparse Accelerated
Dynamic Solver	Accelerated Solver

Hot Rolled Steel Code	None
RISAConnection Code	None
Cold Formed Steel Code	None
Wood Code	None
Wood Temperature	< 100F
Concrete Code	ACI 318-14
Masonry Code	None
Aluminum Code	None - Building
Stainless Steel Code	None

Number of Shear Regions	4
Region Spacing Increment (in)	4
Biaxial Column Method	Exact Integration
Parme Beta Factor (PCA)	.65
Concrete Stress Block	Rectangular
Use Cracked Sections?	Yes
Use Cracked Sections Slab?	Yes
Bad Framing Warnings?	No
Unused Force Warnings?	Yes
Min 1 Bar Diam. Spacing?	No
Concrete Rebar Set	REBAR_SET_ASTMA615
Min % Steel for Column	1
Max % Steel for Column	8

(Global) Model Settings, Continued

Seismic Code	ASCE 7-10
Seismic Base Elevation (ft)	Not Entered
Add Base Weight?	Yes
Ct X	.02
Ct Z	.02
T X (sec)	Not Entered
T Z (sec)	Not Entered
R X	3
R Z	3
Ct Exp. X	.75
Ct Exp. Z	.75
SD1	1
SDS	1
S1	1
TL (sec)	5
Risk Cat	I or II
Drift Cat	Other
Om Z	1
Om X	1
Cd Z	4
Cd X	4
Rho Z	1
Rho X	1

Basic Load Cases

	BLC Description	Category	X Gravity	Y Gravity	Z Gravity	Joint	Point	Distributed	Area(Me...	Surface(...
1	Dead	None		-1		1				
2	Wind 0	None				2				
3	WIND 48	None				4				
4	Wind 90	None				2				

Load Combinations

	Description	Solve	P...	S...	B...	Fa...	B...	Fa...	B...	Fa...	B...	Fa...	B...	Fa...	B...	Fa...	B...	Fa...	B...	Fa...	B...	Fa...	B...	Fa...
1	1.2 Dead + 1.0 Wind 0	Yes	Y		1	1.2	2	1																
2	0.9 Dead + 1.0 Wind 0	Yes	Y		1	.9	2	1																
3	1.2 Dead + 1.0 Wind 48	Yes	Y		1	1.2	3	1																
4	0.9 Dead + 1.0 Wind 48	Yes	Y		1	.9	3	1																
5	1.2 Dead + 1.0 Wind 90	Yes	Y		1	1.2	4	1																
6	0.9 Dead + 1.0 Wind 90	Yes	Y		1	.9	4	1																

Joint Loads and Enforced Displacements (BLC 1 : Dead)

	Joint Label	L,D,M	Direction	Magnitude[(k,k-ft), (in,rad), (k*s^2/ft, k*s^...
1	CENTER	L	Y	-62.89

Joint Loads and Enforced Displacements (BLC 2 : Wind 0)

	Joint Label	L,D,M	Direction	Magnitude[(k,k-ft), (in,rad), (k*s^2/ft, k*s^...
1	CENTER	L	Mx	3679
2	CENTER	L	Z	35.44

Joint Loads and Enforced Displacements (BLC 3 : WIND 48)

	Joint Label	L,D,M	Direction	Magnitude[(k,k-ft), (in,rad), (k*s^2/ft, k*s^...
1	CENTER	L	Mz	2734.045

Joint Loads and Enforced Displacements (BLC 3 : WIND 48) (Continued)

	Joint Label	L,D,M	Direction	Magnitude[(k,k-ft), (in,rad), (k*s^2/ft, k*s^...
2	CENTER	L	Mx	2461.745
3	CENTER	L	X	-26.337
4	CENTER	L	Z	23.714

Joint Loads and Enforced Displacements (BLC 4 : Wind 90)

	Joint Label	L,D,M	Direction	Magnitude[(k,k-ft), (in,rad), (k*s^2/ft, k*s^...
1	CENTER	L	Mz	3679.02
2	CENTER	L	X	-35

Concrete Properties

	Label	E [ksi]	G [ksi]	Nu	Therm (/1E...	Density[k/ft...	f'c[ksi]	Lambda	Flex Steel[...	Shear Stee...
1	Conc3000NW	3156	1372	.15	.6	.145	3	1	60	60
2	Conc3500NW	3409	1482	.15	.6	.145	3.5	1	60	60
3	Conc4000NW	3644	1584	.15	.6	.145	4	1	60	60
4	Conc3000LW	2085	907	.15	.6	.11	3	.75	60	60
5	Conc3500LW	2252	979	.15	.6	.11	3.5	.75	60	60
6	Conc4000LW	2408	1047	.15	.6	.11	4	.75	60	60

ASCE 7 Hazards Report

Address:
No Address at This Location

Standard: ASCE/SEI 7-10
Risk Category: II
Soil Class: D - Stiff Soil

Elevation: 240.76 ft (NAVD 88)
Latitude: 41.223344
Longitude: -73.216772

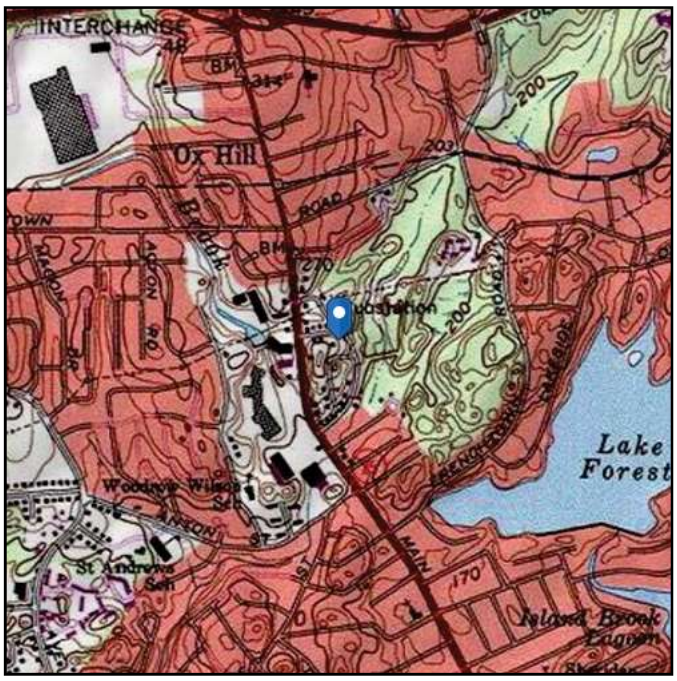

Wind

Seismic

Site Soil Class: D - Stiff Soil

Results:

S_S :	0.209	S_{DS} :	0.223
S_1 :	0.065	S_{D1} :	0.104
F_a :	1.6	T_L :	6
F_v :	2.4	PGA :	0.113
S_{MS} :	0.334	PGA_M :	0.178
S_{M1} :	0.156	F_{PGA} :	1.573
		I_e :	1

Seismic Design Category B

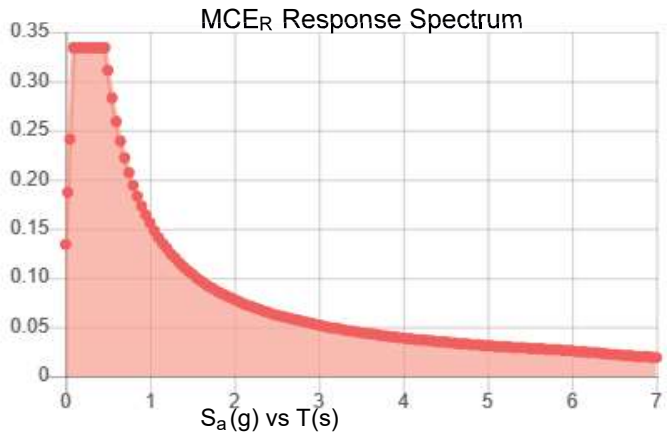

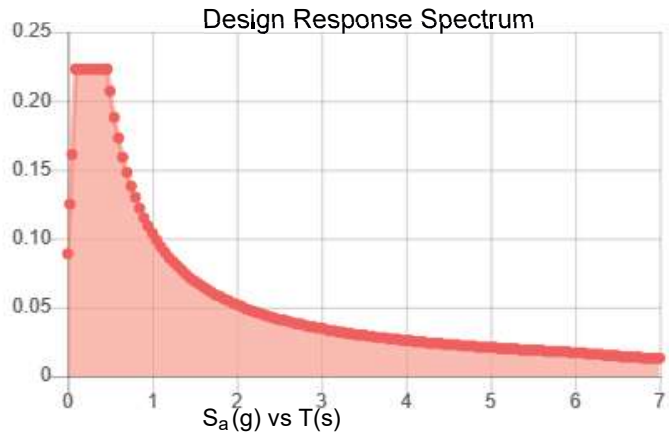

Data Accessed: Thu Apr 25 2019

Date Source: USGS Seismic Design Maps based on ASCE/SEI 7-10, incorporating Supplement 1 and errata of March 31, 2013, and ASCE/SEI 7-10 Table 1.5-2. Additional data for site-specific ground motion procedures in accordance with ASCE/SEI 7-10 Ch. 21 are available from USGS.

Ice

Results:

Ice Thickness:	0.75 in.
Concurrent Temperature:	15 F
Gust Speed:	50 mph
Data Source:	Standard ASCE/SEI 7-10, Figs. 10-2 through 10-8
Date Accessed:	Thu Apr 25 2019

Ice thicknesses on structures in exposed locations at elevations higher than the surrounding terrain and in valleys and gorges may exceed the mapped values.

Values provided are equivalent radial ice thicknesses due to freezing rain with concurrent 3-second gust speeds, for a 50-year mean recurrence interval, and temperatures concurrent with ice thicknesses due to freezing rain. Thicknesses for ice accretions caused by other sources shall be obtained from local meteorological studies. Ice thicknesses in exposed locations at elevations higher than the surrounding terrain and in valleys and gorges may exceed the mapped values.

The ASCE 7 Hazard Tool is provided for your convenience, for informational purposes only, and is provided “as is” and without warranties of any kind. The location data included herein has been obtained from information developed, produced, and maintained by third party providers; or has been extrapolated from maps incorporated in the ASCE 7 standard. While ASCE has made every effort to use data obtained from reliable sources or methodologies, ASCE does not make any representations or warranties as to the accuracy, completeness, reliability, currency, or quality of any data provided herein. Any third-party links provided by this Tool should not be construed as an endorsement, affiliation, relationship, or sponsorship of such third-party content by or from ASCE.

ASCE does not intend, nor should anyone interpret, the results provided by this Tool to replace the sound judgment of a competent professional, having knowledge and experience in the appropriate field(s) of practice, nor to substitute for the standard of care required of such professionals in interpreting and applying the contents of this Tool or the ASCE 7 standard.

In using this Tool, you expressly assume all risks associated with your use. Under no circumstances shall ASCE or its officers, directors, employees, members, affiliates, or agents be liable to you or any other person for any direct, indirect, special, incidental, or consequential damages arising from or related to your use of, or reliance on, the Tool or any information obtained therein. To the fullest extent permitted by law, you agree to release and hold harmless ASCE from any and all liability of any nature arising out of or resulting from any use of data provided by the ASCE 7 Hazard Tool.